CITY OF KERRVILLE
KERR COUNTY, TEXAS

CONTRACT DOCUMENTS

AND

TECHNICAL SPECIFICATIONS

FOR

WASHINGTON/JEFFERSON DRAINAGE PROJECT 2005

THIS DOCUMENT IS
RELEASED FOR THE
PURPOSE OF INTERIM
REVIEW UNDER THE
AUTHORITY OF CHARLES
P. HASTINGS, P.E. 87737
ON FEBRUARY 28, 2005. IT IS
NOT TO BE USED FOR
BIDDING PURPOSES.

Charlie Hastings, P.E.
City Engineer

Date: February 2005
Internet Copy

PUBLIC WORKS DEPARTMENT
ENGINEERING DIVISION

City of Kerrville
Standard Specifications and Contract Documents
Version Updated January 2005

Table of Contents

Section Description

000 Contract Requirements

060 Advertisement for Bid
070 Construction Contract
075 Payment Bond
080 Performance Bond
090 Description of Work

100 General Requirements

101 Residential Subdivision Sequence of Construction

110 Responsibilities & Obligations
111 City of Kerrville
112 Developers & Owners
113 Engineers / Surveyors / Geotechnical
114 Laboratory
115 General Contractors & Subcontractors

120 General Contract Requirements
121 General Requirements
122 Special Requirements
123 Instructions to Bidders
124 Award and Execution of Contract
125 Scope of Work
126 Control of Work
127 Control of Materials
128 Prosecution and Progress
129 Measurement and Payment

130 Technical Specifications
131 General Information

140 General Provisions
141 Definitions
142 Bonds

150 Legal Relations and Responsibilities to the Public
151 Responsibilities

200 Street Specifications

210 Pavement Design Criteria
211 General Information
212 Subgrades with Moisture Sensitive Material
213 Alignment

220 Roadway Excavation and Subgrade Requirements
221 General
222 Construction Work
223 Testing
224 Payment

230 Stabilized Subgrade
231 Lime Stabilized Subgrade
232 Cement Stabilized Subgrade

240 Flexible Base
241 General
242 Material
243 Construction Methods
244 Equipment
245 Testing
246 Payment

250 Hot-Mix Asphaltic Concrete Pavement Base and Surface Courses
251 General
252 Prime Coat
253 Tack Coat
254 Hot-Mix Asphaltic Concrete Pavement Surface Course
255 Testing
256 Payment

260 Surface Treatments
261 General
262 Construction Methods
263 Measurement and Payment

270 Portland Cement Concrete Pavement
271 General
272 Materials
273 Equipment
274 Quality of Concrete
275 Subgrade, Subbase, and Forms
276 Joints
277 Construction Methods
278 Testing
279 Payment

280 Concrete Curb & Gutter
281 Description
282 Materials
283 Construction Methods
284 Alternate Curb Design
285 Payment

290 Street Details

300 Water Specifications

310 Design Criteria for Water Distribution
311 General Information
312 Design Criteria - Mains
313 Design Criteria - Services
314 Construction Plans

320 Materials for Construction
321 General
322 Materials
323 Acceptance Testing
324 Construction Methods
325 Payments

370 Standard Products List
370.01 Piping
370.02 Valves
370.03 Air Release Valves
370.04 Back-Flow Prevention
370.05 Fire Hydrants
370.06 Boxes
370.07 Covers
370.08 Meters
370.09 Miscellaneous

380 Water Details

400 Wastewater Specification

410 Design Criteria for Wastewater Collection
411 General Information
412 Design Criteria, Mains
413 Design Criteria, Manholes
414 Design Criteria, Wastewater Access Device (WAD)
415 Design Criteria, Sewer Services
416 Design Criteria, Lift Stations
417 Construction Plans

420 Materials for Construction
421 General information
422 Materials
423 Testing

430 Lift Stations
431 Description
432 Quality Assurance
433 Component Construction
434 Sample Pump Performance and Design Requirements
435 Operation of System
436 Execution
437 Operations and Maintenance Manuals
438 Accountability
439 Payment

440 Remote Terminal Unit (RTU) for Computer Based Supervisory Control and Data Acquisition System

441 General
442 Products
443 Radio Telemetry Equipment
444 Base System Radio Control Hardware and Software
445 Execution
446 Payment

450 Effluent Reuse – Type I Reclaimed Water
451 General
452 Design Criteria

460 Measurements and Payments

470 Standard Products List
470.01 Piping
470.02 Valves
470.03 Sewage Air Release Valves
470.04 Manholes
470.05 Ring & Covers
470.06 Boxes
470.07 Covers
470.08 Miscellaneous

480 Wastewater Details

500 Storm Sewer Specifications

510 Design Criteria
511 General Description
512 Materials
513 Measurement
514 Payment

570 Standard Product List
571 Ring & Covers
572 Catch Basin Curb Inlets

580 Storm Sewer Details

600 Pipe and Appurtenances

610 General Requirements
611 Description
612 Classification of Excavated Materials
613 Grades, Lines and Levels

620 Materials
621 General
622 Backfill Material

630 Trench Excavation
631 General
632 Excavated Materials
633 Trench Width
634 Trench Depth & Depth of Cover

640 Pipe Embedment
641 General Requirements

642 Compaction & Moisture Requirements

650 Construction Methods
651 General
652 Water / Sewer Line Separation
653 Pipe Anchorage, Support and Protection
654 Connections to Existing Systems
655 Concrete Encasement and Encasement Pipe
656 Concrete Retards
657 Blasting
658 Removal of Water
659 Backfilling

660 Specialized Construction Methods
661 Setting Valves, Drains and Air Releases
662 Setting Fire Hydrants
663 Plugging Dead Ends
664 Protective Covering
665 Valve Box, Casing and Cover

670 Boring of Pipe
671 Description
672 Submittals
673 Materials
674 Construction Methods
675 Cleanup and Restoration
676 Measurement and Payment

700 Separation Distances

710 General Requirements

720 Separation Distances – Wastewater and Water Lines

730 Separation Distances – Type I Reclaimed Water

800 Acceptance Testing

810 General Requirements

820 Water Main Testing

830 Wastewater Testing

840 Storm Drainage Television Inspection

850 Pavement Testing

900 Concrete and Structures

910 Portland Cement Concrete
911 Description
912 Materials
913 Classifications and Proportions
914 Quality of Concrete

920 Concrete Construction
921 Curing
922 Dowels and Anchor Bolts
923 Placing Concrete in Adverse Weather

930 Payment

940 Concrete Structures
941 Curb & Gutter
942 Sidewalks
943 Concrete Box Culverts
944 Reinforcing Steel
945 Concrete Admixtures
946 Fibrous Concrete

980 Concrete Details

1000 Electrical for Water and Sewer Stations

1010 General

1020 Applicable Codes

1030 Contract Documents

1040 Equipment

1050 Installation and Execution

1100 Traffic Control

1110 General

1120 Markings
1121 Work Zone Pavement Markings
1122 Barricades, Signs and Traffic Handling

1130 Traffic Signs

1140 Pavement Markings
1141 Reflectorized Paint
1142 Reflectorized Pavement Markings
1143 Temporary Removeable Pavement Markings
1144 Reflectorized Pavement Markings
1145 Non-Reflectorized Traffic Buttons
1146 Abbreviated Pavement Markings
1147 Jiggle Bar Tile
1148 Eliminating Existing Pavement Markings and Markers
1149 Pavement Surface Preparation for Markings

1150 Miscellaneous
1151 Pull Boxes
1152 Electrical Conduit Ducts

1160 Project Signs
1161 Description
1162 Materials
1163 Installation
1164 Measurement
1165 Payment

1200 Environmental

1210 Scope
1220 General
1230 Applicable Regulations
1240 Notification
1250 Subcontractors
1260 Protection of Land Resources

Section 060

ADVERTISEMENT FOR BID

Sealed bids for the **Washington/Jefferson Drainage Project 2005** will be received by the office of the city clerk, City Hall, 800 Junction Highway, Kerrville, Texas 78028 until **3:00 p.m.** on **March 16, 2005** and will then be publicly opened and read aloud in the Council Chambers at City Hall.

The date and time of opening the bids shall be clearly marked on the outside of the sealed envelope. No bids will be accepted after 3:00 p.m. on the date of bid opening.

The bidding documents, plans, specifications, etc. may be examined by all bidders at the engineering office at City Hall, 800 Junction Highway, Kerrville, Texas, 78028, 830-792-8312, or on the City's website www.kerrville.org and free copies (limit one per contractor) are available at City Hall and will be mailed upon request.

Each bid must be accompanied by a certified check, cashier's check, or bid bond payable to the City of Kerrville, Texas, in the amount of ten percent (10%) of the amount bid as a guarantee that the contract and bond will be entered into within ten (10) days after the award is made.

A performance/payment bond in the amount of one hundred percent (100%) of the total contract price will be required.

No bidder may withdraw his bid within sixty (60) days after the actual date of the opening.

A pre-bid conference shall be held at 3:00 PM on March 9, 2005 in Meeting Room One at City Hall. **All questions regarding this project shall be directed to the City Engineer.**

Advertised:	February 25, 2005 March 4, 2005
Pre-Bid Meeting:	3:00 PM, March 9, 2005
Bid Opening:	**3:00 PM, March 16, 2005**
Bid Award:	March 23, 2005

Section 070

CITY OF KERRVILLE

CONSTRUCTION CONTRACT

This agreement made this day by and between the City of Kerrville, Texas, called "City," and the undersigned "Contractor" as follows:

1. THE WORK

The Contractor shall perform all the work as required by this contract for:

Base Bid
Installation of inlets, reinforced concrete pipe, drainage outlets and pavement repair as detailed in Section 090 "Description of Work".

The following are incorporated herein:

a. General Provisions
b. Technical Specifications
c. Addenda issued prior to receipt of Bid
d. Plans
e. Instructions to Bidders
f. Proposal

Some of such documents may not be physically attached hereto but are on file at City Hall, and copies may be obtained upon request.

2. TIME

Construction substantial completion time will be 60 calendar days and 30 calendar days after for final completion from the date of written notice to proceed. Working days are defined in specification section 123.20. The project shall not be considered complete until all pipeline, drains and streets have been accepted and are operational and performing to their intended purposes. The Contractor's obligations to the project; however, are not complete and retainage will not be released until all disturbed areas have been repaired to like previous condition to the satisfaction of the City Engineer.

3. LIQUIDATED DAMAGES

Liquidated damages are hereby established for work which is not substantially complete in the amount of Three Hundred Dollars ($300.00) per working day for each working day after the date established in the Notice to Proceed. The City may offset any such liquidated damages against any sums from time to time due by the City to Contractor.

The completion time assumes that fifteen percent of the working days are "bad weather days," days on which the work cannot proceed; therefore, the time for completion shall not be extended on account of bad weather until the said number of assumed "bad weather days" has been exceeded.

The time for completion shall not be extended except by written memorandum executed by the Contractor and the City Manager. Contractor shall make written application to the City not later than ten (10) days after the day, event, or cause claimed by Contractor to be a delay. Failure to make such written claim within such time shall result in a waiver by Contractor of an extension based on those particular days, events, or causes. If, for example, this contract assumes twenty (20) bad weather days and Contractor desired a one-day extension for the twenty-first day of rain, Contractor shall make a written claim not later than ten (10) days after the occurrence of such twenty-first day.

The said amount per day is not a penalty but an agreed amount of actual damages which are difficult to calculate. Such damages include loss of staff time, answering complaints by citizens who have been inconvenienced by the work, City Council time, loss of use, and other damages difficult to reasonably anticipate or calculate.

4. PAYMENTS

The City shall pay the Contractor ninety-five percent (95%) of the portion of Contract Sum properly allocable to labor, materials, and equipment incorporated in the Work and ninety-five percent (95%) of the portion of the Contract Sum properly allocable to materials and equipment suitably stored at the site or at some other location agreed upon in writing, less the aggregate of previous payments made by the City, and, upon substantial completion of the entire Work, a sum sufficient to increase the total payments to ninety-five percent (95%) of the Contract Sum. All retainages from progress payments shall be withheld without liability for interest. Upon acceptance, the City shall make payment to Contractor such that one hundred percent (100%) of the Contract Sum has been paid.

The City may choose to award a contract for the amount of the base bid plus no or any combination of additive alternates.

5. LIABILITY INDEMNITY

THE CONTRACTOR AGREES TO INDEMNIFY, DEFEND, AND HOLD HARMLESS THE CITY OF KERRVILLE, TEXAS, AND ALL OF THEIR RESPECTIVE OFFICERS, AGENTS AND EMPLOYEES FROM ALL SUITS, ACTIONS, CLAIMS, DAMAGES, PERSONAL INJURIES, LOSSES, PROPERTY DAMAGES, AND EXPENSES OF ANY CHARACTER WHATSOEVER, INCLUDING ATTORNEY'S FEES BROUGHT FOR OR ON ACCOUNT OF ANY INJURIES OF DAMAGES RECEIVED OR SUSTAINED BY ANY PERSON OR PROPERTY ON ACCOUNT OF ANY NEGLIGENT ACT OF THE CONTRACTOR, THE CITY OF KERRVILLE, TEXAS, OR ANY OF THEIR RESPECTIVE OFFICERS, EMPLOYEES, AGENTS, REPRESENTATIVES, OR SUBCONTRACTORS IN THE EXECUTION, SUPERVISION, AND OPERATIONS GROWING OUT OF OR IN ANY WAY CONNECTED WITH THE PERFORMANCE OF THIS AGREEMENT, WHETHER OR NOT THE ACT OR OMISSION OF THE CITY OR ANY OF THEIR RESPECTIVE OFFICERS, EMPLOYEES, OR AGENTS WAS THE SOLE PROXIMATE CAUSE OF THE INJURY OR DAMAGE OR A PROXIMATE CAUSE JOINTLY AND CONCURRENTLY WITH THE NEGLIGENCE OF THE CONTRACTOR OR ITS OFFICERS, EMPLOYEES, AGENTS, CONTRACTORS, OR SUBCONTRACTORS, IN THE EXECUTION, SUPERVISION AND OPERATIONS GROWING OUT OF OR IN ANY WAY CONNECTED WITH THE PERFORMANCE OF THIS AGREEMENT.

6. LIABILITY INSURANCE

Prior to the commencement of any work and not later than fifteen (15) days following the execution of this contract, the Contractor shall furnish the City copies of paid-up policies (to the City Risk Manager/City Hall) providing Liability and Workman's Compensation Coverage as follows minimum limits):

	TYPE OF INSURANCE	LIMITS
a.	Workman's Compensation covering all employees	Statutory
b.	Employer's Liability	$100,000.00
c.	Comprehensive General Liability	
	Bodily Injury & Property Damage (per occurrence)	$1,000,000.00
	Aggregate	$1,000,000.00
	(Premises/Operations Products/Completed Operations/Independent Contractors/Contractual Liability/Coverages may not be excluded). XCU must be supplied if any exposure.	
d.	Business Automobile Liability covering owned vehicles, rented and non-owned vehicles and employee non-ownership	
	Bodily Injury Property Damage (per occurrence)	$1,000,000.00
	Aggregate	$1,000,000.00

The Commercial General Liability and the Automobile Liability policies shall name the City of Kerrville, Texas, as additional insured and all policies shall provide for a waiver of subrogation in favor of the City of Kerrville. The policy and any renewal certificate shall provide that the City be notified thirty (30) days prior to cancellation or modification of any coverage. Language to the effect that the company will "Endeavor" or "Attempt" to so notify the City of Kerrville is not sufficient. Renewal certificates must be received by the City at least ten (10) days prior to any cancellation date. Policies will be in effect until final acceptance or cancellation of this contract, unless otherwise specified. The City may, at its sole option, terminate this agreement and file a claim on the Contractor's bid bond if the Contractor fails to deliver the required policies and certificates within 15 days after execution of this contract.

It shall be the responsibility of the Contractor to insure that all Subcontractors comply with the same insurance requirements as the said Contractor.

7. CASUALTY INSURANCE

In the event the work includes structures or buildings susceptible to damage by fire, windstorm, or other casualty, then the Contractor before being authorized to begin work shall furnish the City a duplicate original of an insurance policy naming the City of Kerrville as an additionally insured. Such insurance shall insure both the City of Kerrville and Contractor, during the term of the work, against loss by fire, windstorm, vandalism, theft, or other casualty. Such policy shall be in the total amount of this contract.

8. QUALITY OF WORK

All work shall be of good workmanship. Contractor shall comply with all applicable City of Kerrville Codes as well as all applicable professional and technical standards. Materials shall be of first quality.

9. CHANGES AND EXTRAS

No change of this Contract, whether for additional work, additional compensation, or other, shall be effective unless prior thereto a written change order has been authorized by the City Council. Employees of the City do not have the authority to issue change orders.

10. ADDENDA

Contractor acknowledges the receipt of the following addenda:

1. Dated: _____ Acknowledged by: _____

2. Dated: _____ Acknowledged by: _____

11. CONTRACT SUM

Proposal: Contractor agrees to provide all labor, materials, and all incidentals necessary to complete "The Work" for the following Unit Prices:

ITEM NO.	APPROX. QUANTITY	UNIT	DESCRIPTION OF ITEM	UNIT PRICE	TOTAL AMOUNT
1.	1,054	CY	Structural Excavation	$_____	$_____
2.	6,960	CY	Structural Excavation (Trench)	$_____	$_____
3.	2,326	SY	Cut and Restoring Pavement (Asph)	$_____	$_____
4.	140	CY	Flowable Backfill	$_____	$_____
5.	2,326	LF	Trench Excavation Protection	$_____	$_____
6.	28	CY	CL C Concrete (Ret. Wall, Sheet 13)	$_____	$_____
7.	425	SY	Gabion Mattress (Galv) (18 in)	$_____	$_____
8.	108	LF	RC Pipe (CL III) (24”)	$_____	$_____
9.	46	LF	RC Pipe (CL III) (30”)	$_____	$_____
10.	488	LF	RC Pipe (CL III) (42”)	$_____	$_____
11.	495	LF	RC Pipe (CL III) (48”)	$_____	$_____
12.	956	LF	RC Pipe (CL III) (54”)	$_____	$_____
13.	2	EA	Manhole (Compl) (TY 2)	$_____	$_____
14.	3	EA	Manhole (Compl) (TY 3)	$_____	$_____
15.	4	EA	Inlet (Compl) (Drop) (TY Y-1)	$_____	$_____
16.	1	EA	Inlet (Compl) (Drop) (TY Y-1) (Mod)	$_____	$_____
17.	3	EA	Inlet (Compl) (Drop) (TY Y-2)	$_____	$_____
18.	1	EA	Manhole (Compl) (Jct Box) (5’x 5’)	$_____	$_____
19.	2	EA	Manhole (Compl) (Jct Box) (6’x 6’)	$_____	$_____
20.	3	MO	Barricades, Signs and Traffic Handling	$_____	$_____
21.	1	LS	Mobilization, Bonds	$_____	$_____
22.	1	LS	Construction Contingency	$15,000	$15,000

TOTAL BID ..... $_____

COMPLETED BY DATE

_____ _____

Sub-Contractors:

NAME	ADDRESS	PHONE	WORK TO BE PERFORMED
1.			
2.			
3.			

(Attach additional sheet if required)

INSURANCE AGENT

NAME ADDRESS PHONE POLICY

1._____

2._____

3._____

BONDING AGENT

NAME ADDRESS PHONE POLICY

1._____

2._____

3._____

Signed this _____day of _____, 2005

Attest: _____Contractor

_____
Secretary BY:_____
(if bid by a Corporation

Title:_____

SEAL

Business Address:

_____

_____

_____

Phone:_____

Fax:_____

ACCEPTED THIS _____

day of _____, 2005

By: _____
Ron Patterson, City Manager
City of Kerrville, Texas.

ATTEST:

_____
City Clerk

CITY SEAL

APPROVED AS TO FORM:

_____
City Attorney

Section 075

Payment Bond

KNOW ALL MEN BY THESE PRESENTS, that _____

_____

of _____
hereinafter called the CONTRACTOR (Principal), and _____
_____
_____
a corporation duly organized and existing under and by virtue of the laws of the State of _____, hereinafter called the SURETY, and authorized to transact business within the State of Texas, as SURETY, are held and firmly bound unto THE CITY OF KERRVILLE, TEXAS, as OWNER (Obligee), in the sum of:

_____DOLLARS ($_____), lawful money of the United States of America, for the payment of which, well and truly be made to the OWNER, the CONTRACTOR and the SURETY bind themselves and each of their heirs, executors, administrators, successors, and assigns, jointly and severally, firmly by these presents as follows:

THE CONDITION OF THE ABOVE OBLIGATION IS SUCH THAT:

WHEREAS, the CONTRACTOR has executed and entered into a certain Contract hereto attached, with the OWNER, dated _____, 200__,
for:

_____
_____
_____

NOW, THEREFORE, if the CONTRACTOR shall promptly make payment to all persons, firms, and corporations furnishing materials, labor, and services used directly or indirectly by the Contractor in the prosecution of the work, as provided in the Contract Documents, and shall pay the OWNER, all loss, damage, expense, costs, including attorneys fees which the OWNER may sustain by reason of failure or default on the part of CONTRACTOR, then this obligation shall be void; otherwise it shall be and remain in full fore and effect.

PROVIDED, HOWEVER, that no final settlement between the OWNER and the CONTRACTOR shall abridge the right of any beneficiary hereunder, whose claim may be unsatisfied.

PROVIDED, FURTHER, that this BOND is executed pursuant to the provisions of Chapter 2253 of the Texas Government Code, as amended and all liabilities of this Bond shall be determined in accordance with the provisions of said Chapter to the same extent as if it were copied at length herein.

Venue for any disputes arising from or in any way related to the performance of the obligations set forth herein shall be in Kerr County, Texas.

IN WITNESS WHEREOF, the above parties bounded together have executed this instrument this _____day of ____, 200__, the name and corporate seal of each corporate party being hereto affixed and those presents duly signed by its undersigned representative, pursuant to authority of its governing body.

CONTRACTOR

_____

By _____(Seal)

_____
Attest

SURETY

_____

By _____(Seal)

_____
Attest

ATTACH POWER OF ATTORNEY

Section 080

PERFORMANCE BOND

KNOW ALL MEN BY THESE PRESENTS, THAT _____ of _____hereinafter called the CONTRACTOR (Principal), and _____a corporation duly organized and existing under and by virtue of the laws of the State of Texas, hereinafter called the SURETY, and authorized to transact business within the State of Texas, as SURETY, are held and firmly bound unto THE CITY OF KERRVILLE, TEXAS as OWNER (Obligee), in the sum of:

_____DOLLARS ($_____), lawful money of the United States of America, for the payment of which, well and truly be made to the OWNER, the CONTRACTOR and the SURETY bind themselves and each of their heirs, executors, administrators, successors, and assigns, jointly and severally, firmly by these presents as follows:

THE CONDITION OF THE ABOVE OBLIGATION IS SUCH THAT:

WHEREAS, the CONTRACTOR has executed and entered into a certain Contract hereto attached, with the OWNER, dated _____, 200____, for:

_____

_____

_____

NOW, THEREFORE, if the CONTRACTOR shall in all things perform all the terms and conditions of the within and foregoing Contract as provided in the Contract Documents to be by such CONTRACTOR performed, and shall honor all claims for defective work made within ONE year after the completion and acceptance of the foregoing Contract, and shall pay the OWNER, all loss, damage, expense, costs, including attorneys fees which the OWNER may sustain by reason of failure or default on the part of CONTRACTOR, then this obligation shall be void; otherwise it shall be and remain in full force and effect.

PROVIDED, HOWEVER, that this Bond is executed pursuant to the provisions of Chapter 2253 of the Texas Government Code as amended and all liabilities of this Bond shall be determined in accordance with the provisions of said Chapter to the same extent as if it were copied at length herein.

PROVIDED, FURTHER, that the SURETY, for value received, hereby stipulates and agrees that no change, extension of time, alterations, or addition to the terms of the Contract Documents or to the work to be performed thereunder, shall in any way affect its obligation on this bond, and it does

hereby waive notice of any such change, extension of time, alteration, or addition to the terms of the Contract Documents.

Venue for any disputes arising from or in any way related to the performance of the obligations set forth herein shall be in Kerr County, Texas.

IN WITNESS WHEREOF, the above parties bounded together have executed this instrument this _____day of _____, 200___, the name and corporate seal of each corporate party being hereto affixed and those presents duly signed by its undersigned representative, pursuant to authority of its governing body.

CONTRACTOR

_____ _____

By _____(Seal)
Its:_____ (Title)

_____
Attest

SURETY

_____

By _____(Seal)
Attorney-in-Fact

ATTACH POWER OF ATTORNEY

Section 090

DESCRIPTION OF WORK

Following is a summary of work items included in the bid schedule:

1. **Jefferson St, Washington St, Water St, and Spring St.** The base bid includes the trench excavation of approx. 500 l.f. of Jefferson St. from Earl Garrett St. to Washington St., 1,000 lf. of Washington St. from Jefferson St. to Water St., 280 lf. of Water St. from Washington St. to Spring St. and 250 l.f. of Spring St. from Water St. as per the engineering contract documents.

2. **Storm Drain.** The project involves installation of approximately 2093 l.f. of storm drain pipe and related appurtenances within the limits described in item 1 above.

3. **Pavement Repair.** The project involves repair of roadway pavement as per the engineering contract documents after the placement of the storm drain pipe.

4. **Incorporate Existing Drainage System.** The project includes integration of two existing storm drain pipes at the intersection of Washington St. and SH 27. An existing 3'x 2' concrete box shall be filled with flowable backfill and capped at each end as per the engineering contract documents.

5. **Headwall.** The project includes the construction of a concrete headwall at the outfall of the drainage system.

6. **Rock Gabion Mattress.** The project includes the placement of a rock gabion mattress at the outfall of the drainage system to drain the water to the bank of the Guadalupe River.

General Requirements
Section 100

101 Residential Subdivision Sequence of Construction

Residential Subdivisions must follow a sequence of construction as noted by the City Engineer and outline below. Where variances are deemed necessary by the Developer's Engineer (Texas Licensed Professional Engineer) the request must be in written form to the City Engineer for consideration.

A. Erosion Control devices installed per Storm Water Pollution Prevention Plan. Erosion Control devices must be maintained during the entire course of construction.
B. Drainage and Grading including all cut and fill for proposed streets must be installed first (drainage pipe, culverts, inlet boxes, channels, rip-rap, detention/retention ponds, etc.).
C. Utilities installed after drainage and especially after cut and fill has been complete. Utilities include but are not limited to Water, Sewer, Electric, Cable, Telephone, and Gas. Revegetation begins immediately in areas of utilities installed out of the Right of Way.
D. Utilities (including Storm Drainage Pipe) tested per Section 800 of Kerrville Standard Specifications of Subdivision Construction and subsequent repairs made.
E. Pavement installed and revegetation of right of way. Pavement may not begin until all Utilities within the Right of Way are installed and complete (Water, Sewer, Electric, Cable, Telephone, and Gas).
F. Utilities tested per Section 800 of Kerrville Standard Specifications of Subdivision Construction and subsequent repairs made.
G. Record drawings (As-Built) submitted to City Engineer.
H. Revegetation complete, Erosion Control devices removed.
I. Final Walk Through, Punch List, Final Acceptance.

110 Responsibilities and Obligations

111 City of Kerrville

111.01 Specification Deficiencies: If omissions or ambiguities occur in these specifications, requirements of the Texas Department of Transportation and/or the Texas Natural Resources Conservation Commission shall govern that part of the work.

111.02 Standard Products Lists (SPL): The City of Kerrville Standard Products Lists (SPL) is considered to form a part of these Specifications. Contractors may, when appropriate, elect to use products from the SPL; however, submittal to the Engineer is still required.

The SPL's should not be interpreted as being a pre-approved list of products necessarily meeting the requirements for a given construction project. Items contained in the SPL cannot be substituted for items shown on the Drawings, or called for in the specifications, or specified in the Bidding Requirements, Contract Forms and Conditions of Contract, unless approved by the Engineer

The Contractor shall submit descriptive information and evidence that the materials and equipment the Contractor proposes for incorporation in the Work is of the kind and quality that satisfies the specified functions and quality.

111.03 Authority and Duties of Inspector: Inspector will be authorized to inspect all work done and all materials furnished. Such inspection may extend to all or to any part of the work and to the preparation or manufacture of the materials to be used. An inspector will be assigned to the work by the City Engineer and will report to him the progress of the work and the manner in which it is being

performed; also to report whenever it appears that the materials furnished and the work performed by the Contractor fail to fulfill the requirements of the Construction Documents and to call the attention of the Contractor and the Owner to any obligation to perform the work in accordance with the requirements of the Construction Documents.

The Inspector will not be authorized to revoke, alter, enlarge, or release any requirement of the Construction Documents, nor to approve or accept any portion of work, or to issue instructions contrary to the Construction Documents. He will in no case act as foreman or perform other supervisory duties for the Contractor nor interfere with the management of the work. The inspector shall, however, have the authority to temporarily suspend work if deficiencies are discovered. Such suspension shall be followed by written notification to the Consulting Engineer/Owner and may be appealed to the City Engineer.

111.04 Final Inspection: Within five working days after the Owner has given the City Engineer written notice that the work has been substantially completed, the Inspector will review the work and schedule a final acceptance walk through.

111.05 Acceptance by the City: A meeting for final acceptance will be on the site and at a time mutually agreeable between the City Engineer and the Owner. The Inspector will also invite:

A. Contractors, as appropriate
B. Consulting Engineer
C. Water/Wastewater Utility Representative
D. Street Department Representative
E. City Of Kerrville Engineering Department
F. If the project involved A.D.A. requirements and T.D.L.R./Independent Contractor approved the plans the representative for T.D.L.R./Independent Contractor that reviewed the plans will be invited.

A final acceptance letter or a conditional acceptance letter will be provided by the City Engineer based on the results of the walk through.

112 Developers & Owners

112.01 Owner-Engineer Relationship: The owner shall specify his representatives for the work who will be responsible for all communications with the City. When the Construction Plans have been approved by the City Engineer and passed to the Construction Inspector, the work must not deviate from the signed Construction Documents. Field adjustments not affecting project integrity, cost of construction, time and consistent with intent of design may be approved by the Inspector. The office of the City Engineer must approve changes to Construction Drawings.

112.02 Owners Duty and Superintendence: The Owner shall insure that no work shall be done nor materials used without qualified supervision and inspection of work.

If the project is 5 acres or more in size, then the owner is required to have an EPA NPDES Permit issued by the EPA Region VI. A copy of the report and permit shall be on file with the City Of Kerrville Engineering Department. A copy of the permit shall be posted on the jobsite per EPA requirements.

If burning is allowed on the project, then a TCEQ burn permit and authorization from the City Of Kerrville Fire Marshall is required. The owners and/or the contractor must also comply with any Kerr County Burn Bans that are imposed due to weather conditions.

112.03 Pre-construction Conference: The Owner will distribute approved plans prior to convening a pre-construction Conference to start any construction. As a minimum, the conference shall consist of: introduction of all parties with exchange of phone numbers and addresses; discussion of start dates and schedule of events; Erosion and Sedimentation controls, traffic control, barricades, superintendence, and final acceptance guidelines and publishing and distribution of minutes. A minimum of two days notice of the conference will be given to:

A. Owners Representative
B. Consulting Engineer
C. Contractors for roads, drains, and utilities
D. City Engineer or Representative
E. Water/Wastewater Utility Director
F. Fire Department
G. Texas Department of Transportation, (if applicable)

112.04 Substantial Completion: Substantial completion shall be defined as the date that, in the opinion of the Owner or his Consulting Engineer, all work will be finished within 10 days.

112.05 Guarantee Against Work: Owner shall warrant the work for a period of one year from the date of the Letter of Final Acceptance of complete project. Said warranty shall bind Owner to correct any defects in materials, workmanship (including utility backfills), or design inadequacies, which may be discovered within said one year period. Owner shall correct or cause his Contractor to correct at his own expense, such defects within 30 days after receiving written notice of such defects from the City Engineer. Should Owner or his Contractor fail or refuse to correct such defects within the said 30 day period or to provide acceptable assurances that such work will be completed within a reasonable time thereafter, the City of Kerrville may correct any such defects at expense of Owner or his Contractor or his bond.

113 Engineers / Surveyors

113.01 Construction Drawings: Construction drawings shall meet all requirements of the City of Kerrville Standard Specifications and Subdivision ordinance, and must be approved by the office of the City Engineer.

All subdivisions are considered to be open to the public, this includes gated residential communities. All projects submitted for construction must be designed to adhere to the Texas Department of Licensing & Regulations – Architectural Barriers Act. Additional requirements are in this section under 120 of this chapter.

113.02 Geotechnical Evaluation: A geotechnical report including laboratory reports shall be submitted at the time of the construction drawings submittal to support the design submitted. This report shall include a geotechnical evaluation for any structures (i.e. Lift Stations, concrete foundations, etc.) and to support the street design.

113.03 Drainage Report: Drainage calculations are required for all culverts, low water crossing and drainage ditches.

A drainage report and storm water pollution prevention plan if required shall be submitted at the time of the construction drawings submittal to support the design.

113.04 As-Built Drawings: The Owner's Engineer must submit record drawings that have been signed, sealed, and dated by final acceptance of the project.

114 Laboratory

114.01 Testing of Materials: Unless otherwise specified, atterberg limits and soil moisture-density tests performed on the site to determine the quality of material to be incorporated into the project will be as directed by the Engineer. Frequency, time, locations, and procedures of tests will be coordinated and approved by the Inspector. This testing is to be accomplished by an independent laboratory. Payment for all testing will be the responsibility of the Contractor. Restoration or patching required due to testing shall be done at no expense to the City.

115 General Contractors / Sub Contractors

115.01 Submittals: Prior to the start of construction four copies of submittals are required for the project in bound folders. Allow five (5) workings days for Engineering to review the submittals. They will be reviewed by Engineering:

If approved: Two copies will be returned to the General Contractor stamped approved.
If rejected: Four Copies will be returned to the General Contractor with a cover letter stating areas of concern.

Utility and Street Construction cannot start prior to approval of the submittals.

115.02 Trench Safety System Plan Submittal: Prior to, or at the Pre-Construction Conference, the Contractor shall submit to the City Of Kerrville a Trench Safety System Plan sealed by a registered Professional Engineer licensed in the State of Texas.

A Notice To Proceed with construction will not be issued by the City Of Kerrville until the Contractor has submitted a Trench Safety System Plan to the City Of Kerrville.

The Trench Safety System Plan at a minimum shall conform to OSHA standards for sloping of sides, utilization of trench boxes, and/or utilization of shoring, sheeting and bracing methods.

The Contractor's Competent Person(s) shall be responsible for the maintenance of a copy of appropriate OSHA regulations onsite and the implementation of OSHA trenching safety regulations at the work site. Trenching shall be completed to the lines and grades indicated on the Drawings or as specified in various technical standard specification items requiring excavation and trenching and/or backfilling. The Contractor shall perform all trenching in a safe manner and shall maintain safety systems to prevent death or injury to personnel or damage to structures, utilities or property in or near excavation.

If evidence of possible cave-ins or earthen slides is apparent or an installed trench safety system is damaged, the work in trench shall immediately cease, personnel evacuated from hazardous area and the Owner notified. Personnel shall not be allowed to re-enter the excavation until necessary repairs or replacements are completed and are inspected and approved by the Contractor's Competent Person(s). Repair and replacement of damaged safety system shall be at the Contractor's sole expense.

115.03 Water, Solid Waste and Electricity: The Contractor shall make arrangements as may be required to bear all expenses for obtaining water, solid waste disposal, and temporary electric power. The contractor shall make all connections, furnish all necessary extensions, and remove same upon completion of the work.

The contractor shall establish an account with the City Of Kerrville landfill contractor prior to the start of the job, if solid waste is to be generated on the project. Construction debris and waste shall be

disposed of per TCEQ requirements. Depending on the project a roll-off may be required to contain the waste. Due to contracts requirements with the City Of Kerrville landfill contractor, the contractor shall pay all tipping fees for the project. This includes Capital Improvements Projects as well as private developments. All outstanding bills shall be paid prior to final acceptance of the project.

Any damage to City Of Kerrville property will be billed to the contractor. Any outstanding bills shall be paid prior to final acceptance of the project.

115.04 State Sales Tax: The Contractor shall be responsible for payment of all State Sales Taxes applicable to the materials used in the work. There shall be no separate payments for such taxes, it being intended that such taxes shall be included in the bid price for respective bid items for the work.

Contractors that contract with the City Of Kerrville and perform Capital Improvement Projects (CIP) for the City Of Kerrville will be issued a certificate that can be used to notify suppliers that no sales taxes are due for this project.

120 General Contract Requirements

121 General Requirements

The engineer on record for the project needs to determine what general requirements are required for the project. Private projects do not require all of the sections outlined in Section 122.

122 Special Requirements

122.01 Bidding: Expenditures of $25,000 and over must be awarded by the city council based on the sealed bid process. Expenditures under $25,000 may be awarded based on written quotes and may be approved by the city manager. All written contracts must be reviewed and approved by the city attorney.

122.02 Advertising: Any project subject to the sealed bidding process must be authorized for bidding by the city council and funds must be budgeted with a line item number. Bid documents must be available in the office of the City Secretary prior to authorization. After authorization the project must be advertised in the official newspaper of the city of Kerrville, a minimum of twice, with one week between notices.

122.03 Bid Award: Bids may be not be opened until 14 days after the first notice appears (not counting the day of advertising). A pre-bid conference will be scheduled during the week prior to opening of the bids. All bids received will be keep in the office of the City Secretary and will be opened by the purchasing agent of the city at the scheduled time and date.

122.04 Engineering: Any Public Works project must have plans, specifications and cost estimates prepared by a Registered Professional Engineer (P.E.) and must be constructed under supervision of a P.E., if the cost exceeds $20,000 or if it requires structural, electrical or mechanical engineering and the cost exceeds $8,000.

122.05 Bonding: Contracts for public works projects over $25,000 must include a payment bond and contracts for projects over $100,000 must include a performance and a payment bond. Both of these bonds must be in the total amount of the contract and must be solely for the protection of the city. As a matter of policy in Kerrville we do not execute contracts for over $100,000 without both bonds. Contracts for construction of public works projects under $25,000 may eliminate both of these bonds;

however the contract will exclude any payments prior to completion of the work and final payment must include an affidavit stating that all bills for materials and labor have been paid by the prime contractor.

122.06 Insurance: Workers Compensation covering all employees per the statutory requirement is required on all contracts. The following insurance is required on all contracts over $15,000:

a. Employer's Liability $100,000
b. Comprehensive General Liability and
   Bodily Injury & Property Damage (per occurrence) $1,000,000
   Aggregate $1,000,000
   (Premises/Operations/Products/Completed Operations/Independent Contractors/Contractual Liability/Coverages may not be excluded). XCU must be supplied if any exposure.
c. Business Automobile Liability covering owned vehicles, rented and non-owned vehicles and employee non-ownership Bodily Injury Property Damage (per occurrence) of $1,000,000 with aggregate of $1,000,000

122.07 Americans with Disabilities Act: All subdivisions are considered to be open to the public, this includes gated residential communities. All projects submitted for construction must be designed to adhere to the Texas Department of Licensing & Regulations Architectural Barriers Act. Diagonal Curb Ramps will not be accepted, ramps shall intersect the roadway section at right angles. Any ramps that cannot intersect the roadway at right angles require approval of the City Engineer.

The engineer on record must submit the plans and specifications where the estimated total construction cost of the project exceeds $50,000 to the Texas Department of Licensing and Regulation for approval prior to the Notice to Proceed is issued.

All capital projects constructed by the city which are open to public access must be designed to be ADA compliant. All new construction or reconstruction projects where the estimated cost exceeds $50,000 must be submitted to the Texas Department of Licensing and Regulation for approval prior to the start of construction by the engineer of record.

122.08 Texas Antiquities Act: Advance project review is required by the Texas Historical Commission if the Public Works construction project disturbs more than five acres of surface area or 5,000 cubic yards of earth, or if the project is inside a designated historical district or a recorded archeological site. If the THC determines that a survey is not required, no further action is necessary. If a survey is required it must be completed before construction begins and must conform to their guidelines for archeological surveys.

122.09 EPA National Pollutant Discharge Elimination (NPDES): Projects which disturb over 5 acres must comply with NPDES requirements. These require that a plan be prepared by a Professional Engineer and be included in the bid documents. A Notice of Intent (NOI) as part of an EPA - NPDES general permit must be submitted to EPA by the contractor or owner, at least 48 hours prior to the start of construction. A Notice of Termination (NOT) must be prepared upon completion of the conditions specified in the SW3P and submitted to EPA.

122.10 Storm Water Pollution Prevention Plan (SW3P): Plans and specifications for all projects located in TxDOT right of way and all projects which disturb over 5 acres, are required to include a plan to mitigate storm water pollution. Other city capital projects may include this plan if deemed necessary to prevent surface water pollution. This SW3P will be part of the work which is performed by the contractor. As a minimum the SW3P must include:

Site description.
Control measures to be performed by the contractor.
Any permanent storm water management measures.
Procedures for maintenance of erosion control measures.
Description of inspection procedures.

122.11 TCEQ Approvals: Plans and specification must be filed for record with TCEQ - Water Quality Division, for all wastewater collection system extensions, but no approval will be issued by TCEQ. All water distribution system extensions which constitute a significant change (10 % or more) must be submitted to the Plan Review Team of TCEQ and approved prior to construction. All improvements other than maintenance of existing facilities at the water or wastewater treatment plants must be submitted to and approved by TCEQ (Water Quality Division), prior to bidding. All plans which include work on public water or wastewater systems must conform to the TCEQ requirements for water and wastewater systems.

122.12 Wetlands: Any project which disturbs (cut/fill) land that is below the plane of ordinary high water of a stream or area that is considered "waters of the United States", will be required to submit a 404 permit. In most cases of city of Kerrville public works projects, this will be a US Army Corps of Engineers Nationwide Permit #14.

122.13 Minority/DBE Participation: The city of Kerrville has adopted a DBE program as a requirement of several DOT with the terms of that grant applications and every capital project must comply program. The DBE program director will compile and make available a list of DBE contractors and the bidding process should incorporate procedures whereby bidders, agree to make "reasonable efforts" to meet the stated goal of the city for DBE participation (10%).

122.14 Prevailing Wage Requirements: The ***Davis-Bacon Act,*** as amended, requires that each contract over $2,000 to which the United States is a party for the construction, alteration, or repair of public buildings or public works shall contain a clause setting forth the minimum wages to be paid to various classes of laborers and mechanics employed under the contract. Under the provisions of the Act, contractors or their subcontractors are to pay workers employed directly upon the site of the work no less than the locally prevailing wages and fringe benefits paid on projects of a similar character. In addition to the Davis-Bacon Act itself, Congress has added prevailing wage provisions to approximately 60 statutes which assist construction projects through grants, loans, loan guarantees, and insurance.

In general for city of Kerrville projects this act does not apply; however if we are utilizing grant monies from state agencies or if there is TxDOT participation in the form of federal pass through monies, then the grant documents will include a requirement for the city to comply with these provisions. Where we are required to comply we include a provision in the specifications that requires the contractor to pay the prevailing wages as determined by Texas Department of Commerce for this area. In addition we are required to request a copy of this "wage determination" within ten days of the bid opening and to make this a part of the contract documents.

122.15 Texas Antiquities Act: Advance project review is required by the Texas Historical Commission if public infrastructure disturbs more than five (5) acres of surface area or five thousand (5000) cubic yards of earth, or if the project is inside a designated historical district or a recorded archeological site. If the THC determines that a survey is not required, no further action is necessary. If a survey is required it must be complete before construction begins and must conform to their guidelines for archeological surveys.

122.16 City Of Kerrville Planning & Zoning: The engineer on record for the project needs to determine what planning and zoning ordinances are required for the project. If the project would require any waivers or variances that need to be acted upon then they need to be submitted to the City Of Kerrville Construction Development Department.

123 Instruction to Bidders

123.01 Examination of Contract Documents: Before submitting a bid, the bidder shall examine carefully the proposal, plans, specifications, special provisions and the form of contract to be entered into for the work contemplated. The submission of a bid shall constitute an acknowledgment that the bidder has thoroughly examined and is familiar with the contract documents. The failure or neglect of a bidder to receive or examine any of the contract documents shall in no way relieve him from any obligations with respect to his bid or to the contract. No claim for extra or additional compensation will be allowed based upon a lack of knowledge of any contract document, and the owner will in no case be responsible for any loss or for unanticipated cost that may be suffered by the Contractor as a result of conditions pertaining to the work.

123.02 Quantities Are Approximate: The quantities named in the proposal or separately listed are approximate only, but these are to be used as a basis for the comparison of proposals and to determine the amount of the bonds. If, however, unit prices (where used) appear to the Owner to be unbalanced to such an extent that changes in actual quantities required under the contract might result in contract price adjustments which would increase payments to the Contractor excessively, then the Owner may take such a condition under consideration in making the award of the contract.

123.03 Examination of Site and Conditions: Before making a proposal, the bidder shall examine the site of the work and ascertain for himself all physical conditions in relation thereto. Failure to take this precaution shall not release him from his obligation as implied by the proposal he submits nor excuse him from performing the work in strict accordance with the requirements of the contract documents.

No statement made by any officer, agent, or employee of the Owner pertaining to the site of the work or the conditions under which the work must be performed will be binding on the Owner.

123.04 Addenda and Interpretations of Documents: No interpretations of the contract documents or other pre-bid documents will be made to any bidder orally. Every request for such interpretation shall be submitted in writing, addressed to the City Engineer and in order to receive consideration shall be received at least five days prior to the date fixed for opening of bids. Any and all such interpretations and any supplemental instructions will be in the form of written addenda to the specifications, which, if issued, will be mailed or otherwise delivered to each prospective bidder. Failure of any bidder to receive any such addendum shall not relieve such bidder from any obligation under his bid as submitted. All addenda issued shall become a part of the contract documents.

123.05 Qualification of Bidders: The owner desires that this project be built by a contractor who is competent and adequately financed. The Owner may request the bidder to submit a written statement to show experience in construction work of this character as an indication of qualifications and business standing. If required, the bidder may make his statement in such form as may seem appropriate. Such statement must be notarized. Failure to comply with this request may cause rejection of the bid.

123.06 Execution of Contract: The bidder, as part of the bid, shall execute the City of Kerrville Construction Contract and fill in all blanks.

123.07 Preparation of the Bid: Bids must be submitted by filling in with ink (or typing) each and every

blank provided for such purpose in the form headed City of Kerrville Construction Contract (Proposal); or if the bidder is required to provide a special form appropriate to the nature of his bid, then such form shall be complete in all respects as required by the contract documents if it is to merit consideration by the Owner. When indicated, all blank spaces shall be filled in with words and figures. Written amounts shall take precedence where there is a conflict between the written and the figure. If the proposal is made by a partnership, it should contain the name of each partner and should be signed in the firm name followed by the signature of a partner or that of a person duly authorized to act for and on behalf of such partnership. If made by a corporation, the bid form should be signed with the name of the corporation and the state in which incorporated followed by the written signature of the qualified officer and the designation of the office he holds in the corporation in whose behalf the bid is submitted shall be given. The bidder shall comply with all other specific requirements of the bid form.

123.08 Alteration of Documents Prohibited: Except as may be provided otherwise herein, bids which are incomplete, are conditioned in any way, contain unverified erasures or alterations, or include items which are not named in the bid form or which are unlawful may be rejected.

123.09 Submission of Bid: Each bid shall be completely sealed in a package addressed as required by the official advertisement and marked with the name of the bidder and the title of the project and must be delivered to City Hall at or before the time named in the advertisement. If forwarded by mail, the sealed envelope containing the bid form shall be enclosed in another envelope addressed to the City Clerk, 800 Junction Highway, Kerrville, Texas 78028 "BID ENCLOSED".

123.10 Modification of a Bid: A change in a bid already delivered will be permitted only if a request for the privilege of making such modification is made in writing signed by the bidder and the specific modification itself is stated prior to the scheduled closing time for the receipt of bids. To be effective, every modification must be made in writing over the signature of the bidder, and no other procedure will be acceptable.

123.11 Listing of Subcontractors: If the Contractor proposes to sublet any of the work, he shall list the name of the subcontractor(s) in the space provided in the bid form. Should the bid form not provide space for the listing of the names for proposed subcontractor(s), the Contractor shall provide such a list to accompany his bid. Failure to include this information in his proposal could constitute cause for rejection of any and all requests for subcontracting any portion of the work.

123.12 Bid Security: Each bid form must be accompanied by cash, certified check of the bidder, or a bid bond duly executed by the bidder as principal and having as surety thereon a surety company approved by the Owner in the amount of Ten (10) percent of the bid, unless applicable law requires less. Such cash checks, or bid bonds will be returned promptly after execution of the contract or, if no award has been made within sixty days after the date of the opening of bids, upon demand of the bidder at any time thereafter, so long as he had not been notified of the acceptance bid.

The successful bidder, upon his failure or refusal to execute and deliver the bonds required within ten days after he has received notice of the acceptance of his bid, shall forfeit to the Owner as liquidated damages for such failure or refusal the security deposited with his bid.

The Attorney-in-fact who signs the bid bonds or contract bonds must file with each bond a certified and effectively dated copy of his power of attorney.

123.13 Withdrawal of Bid: A bid may be withdrawn at any time prior to the scheduled closing time for filing the bids. This may be done by the bidder in person or upon his written request. A telephone request for withdrawal of a bid will not be recognized. If withdrawal is made personally, a written

acknowledgment thereof will be required. After the scheduled closing time for filing the bids, no bidder will be permitted to withdraw his bid unless no award of contract has been made prior to the expiration of sixty days immediately following the date when the bids are opened. Bids received after the scheduled closing time will be returned to the bidder unopened.

123.14 Opening of Bids: All bids received prior to the scheduled closing time and which are not withdrawn as above provided will be publicly opened and read aloud, even though there may be irregularities or informalities therein.

123.15 Affidavit of Noncollusion: The Owner reserves the right to require that any bidder before being awarded a contract shall execute a noncollusion affidavit in such form as will satisfy the Owner that the bid offered is genuine, is not a sham or collusive, and in no respect or degree is made in the interest or on behalf of any person, firm, or corporation not named in the form containing such bid.

123.16 Pre-Bid Conference: A pre-bid conference between the City of Kerrville, prospective bidder, suppliers, etc., will be held at City Hall, 800 Junction Hwy., Meeting Room No. 1, to make certain the scope of work is fully understood and to answer any questions. No addendum will be issued at this meeting, but subsequent thereto, if necessary to clear up any questions an addendum will be issued. After this meeting, the contractors will have the opportunity of viewing the work sites and the test pits provided by the city.

123.17 Inspection of Site: The bidder shall examine the site of work and satisfy himself as to the conditions which will be encountered relating to the character, quality and quantity of work to be performed and materials to be furnished.

Any borings, soil profiles and water elevations shown on the plans were obtained for use of the City of Kerrville in the preparation of plans and the bidder is hereby cautioned regarding the accuracy of these data. The bidder, in preparing his proposal, shall take cognizance of the difficulty of accurately classifying material encountered in making foundation investigations, the possible erosion of stream channels and banks after survey data have been obtained and the reliability of water elevations other than for the date recorded.

123.18 Safe Return of Bid Information: "Good Condition" shall require that no markings, missing pages, erasures, etc., be present on or within Contract Documents, Technical Specifications or Plans to obtain the refund of deposit. Refund shall be made through the accounting department and may take approximately two weeks.

123.19 Supplemental Pay Items: These items are included to facilitate payment for changes and alterations that may be required to complete work. The actual work as provided by the General Conditions of the agreement and Technical SPECIFICATIONS and shown on Plans. When work covered by Supplemental Items or required by the Engineer, payment will be based on the quantity actually constructed and unit Prices Bid in Proposal.

123.20 Working Day: A working day is defined as a calendar day, not including Saturdays, Sundays, or legal holidays of the City of Kerrville, in which weather or others conditions not under the control of the Contractor will permit the performance of the principal unit of work underway for a continuous period of not less than 7 hours between 7 a.m. and 6 p.m. For every Saturday or legal holiday except the following holidays:

> January 1st, the last Monday in May, July 4th, the first Monday in September, the fourth Thursday in November and December 25th

on which the Contractor chooses to work, one day will be charged against the contract working time when weather conditions will permit 7 hours of work as delineated above and the contractor shall pay inspection fees of $35/hour to the City of Kerrville. The principal unit of work shall be that unit which controls the completion time of the contract. Work on Sunday and on the six legal holidays listed above will not be permitted except in cases of extreme emergency or when the safety of the Contractor's forces and/or the traveling public would be significantly improved, and then only with the written permission of the Engineer. If Sunday work or work on the six legal holidays listed above is permitted, working time will be charged on the same basis as weekdays.

124 Award and Execution of Contract

124.01 Consideration of Bids: For the purpose of award, after the proposals are opened and read, the summation of the products of the approximate quantities shown in the proposal and the unit prices bid will be considered the amount of the bid. The summations will then be compared and the results made available to the public. Until the award of the contract is made, the City of Kerrville reserves the right to reject any or all proposals and to waive such technicalities as may be considered to be in the best interest of the City.

In determining the amount of the bid as well as computing amount due for payment of each item under the contract, the City of Kerrville reserves the right to round off all unit bids involving fractional parts of a cent to the nearest one-tenth cent.

124.02 Award of the Contract: Within sixty calendar days after the opening of the bids, the Owner will award the contract or reject all bids. Formal acceptance of the bids can be made only by the City of Kerrville. It reserves the right to reject any or all bids, to solely determine the best and lowest bid, and to waive any informalities.

124.03 Execution of Contract, Bonds and Certificates of Insurance: Within 15 days after written notification of award of the contract, the bidder shall execute and furnish to the City of Kerrville: (1) contract, (2) performance bond and payment bond, with powers of attorney attached, each in the full amount of the contract price, executed by a surety company or surety companies authorized to execute surety bonds under and in accordance with the laws of the State of Texas, and (3) Certificate of Insurance showing coverages in accordance with contract requirements.

124.04 Beginning of Work: The Contractor shall not begin work until authorized by the City of Kerrville in writing to do so. Authorization notification will be by Notice to Proceed.

125 Scope of Work

125.01 Claims and Disputes: In the event that the Contractor requests additional compensation for work not clearly covered in the contract, the Contractor shall notify the Engineer in writing of his intention to make a claim for additional compensation before beginning such work, once he has knowledge, or during the initial stages of such work. An assessment of damages is not required to be a part of this notice but is desirable. If such notice is not given and the Engineer is not provided an opportunity to keep an accurate account of the actual cost of the work in question, then the Contractor waives his right to file a claim for such work, unless the circumstances are such that the Contractor could not reasonably have knowledge of the additional cost prior to the performance of the work. Notice of claim by the Contractor and the documentation of the cost of the work by the Engineer shall not be construed as proof or substantiation of the validity of said claim.

125.02 Final Clean Up: Upon completion of the work and before acceptance and final payment is made, the Contractor shall clean, remove rubbish and temporary structures from the highway, restore in an acceptable manner all property which has been damaged during the prosecution of the work and

leave the site of the work in a neat and presentable condition throughout.

Upon the completion of any structure, all excess materials, cofferdams, construction buildings, temporary structures and debris resulting from construction shall be removed. Where work is in a stream, all debris shall be removed to the ground line of the bed of the stream and the stream channels and street/highway left unobstructed and in a neat and presentable condition. All structures shall be cleaned to the flow line or the elevation of the outfall channel, whichever is higher.

125.03 Removal of Contractor's Equipment and Materials: It is understood and agreed that the Contractor is to promptly remove from the project right-of-way and other property owned or controlled by the Owner all equipment and material that he places thereon that is not to become the property of the Owner. It is further understood and agreed that any such equipment and material of all kinds that is not removed as herein provided within thirty (30) days after the date upon which all work to be done under the contract is completed and accepted by the Owner or within such longer time as may be agreed upon in writing between the Owner and the Contractor shall become the property of the Owner and may be used or otherwise disposed of by the Owner without obligation to the Contractor or to any party to whom he may transfer title.

126 Control of Work

126.01 Conformity with Plans, Specifications and Special Provisions: All work performed and all materials furnished shall be in reasonably close conformity with the lines, grades, cross sections, dimensions, details, gradations, physical and chemical characteristics of materials in accordance with tolerances shown on the plans or indicated in the specifications and special provisions.

In the event the Engineer finds that the work performed or the materials used are not within reasonably close conformity with the plans, specifications and special provisions, the affected material or product shall be removed and replaced or otherwise satisfactorily corrected by and at the expense of the Contractor.

Any deviations from the plans and approved work drawings will be made only with the approval of the Engineer.

126.02 Coordination of Plans, Specifications and Special Provisions: The specifications accompanying plans, special provisions and addendums are essential parts of the contract and a requirement occurring in one is as binding as though occurring in all. They are intended to be cooperative and to describe and provide for a complete work. In cases of disagreement, figured dimensions shall govern over scaled dimensions, plans shall govern over standard and special specifications, and special provisions shall govern over both standard and special specifications and plans.

126.03 Cooperation of Contractor: The Contractor shall have one copy of the plans and specifications available on the project at all times. He shall give the work his constant attention to facilitate the progress thereof and shall cooperate with the Engineer and his representatives in every way possible. The Superintendent shall be cooperative, responsible and competent, English speaking, authorized to receive orders and to act for the Contractor. The Superintendent will be available at all times. In the event a competent superintendent is not available, the Engineer may suspend work until one is available.

126.04 Deviation from the Plans and Specifications: No deviation from the requirements of the plans and specifications will be permitted without the express, written approval of the Engineer. The Contractor shall prepare and/or assemble a detailed description of each proposed deviation from the

plans and specifications. The description of each proposed deviation shall include, but not be limited to, drawings indicating horizontal and vertical details of all structural, mechanical and electrical elements of the proposed deviation, manufacturer's detailed performance and construction data for all equipment, detailed descriptive specifications of all piping and valves and all other data, information and plans as requested by the Engineer. The copies of the description of each proposed deviation shall be submitted to the Engineer for review.

All deviations from the plans and specifications shall conform to the original defined and implied intent of the plans and specifications.

The Contractor shall be responsible for and assume all costs of all elements of approved deviations including, but not limited to design, preparation of plans, procurement of materials and equipment, construction, installation and instigation of service. If the completed improvements of each deviation do not fulfill, provide, and meet the defined and implied intent of the plans and specifications, the Contractor shall provide labor, materials and equipment as required to modify the work to the satisfaction of the Engineer.

126.05 Interpretation of the Contract Documents: The apparent silence of the specifications and plans as to any detail or the apparent omission from them of a detailed description concerning any point shall be regarded as meaning that only the best general practice is to prevail and that only first-quality material and good workmanship are to be used.

The Contractor shall take no advantage of any errors or omissions in the specifications and plans or of any discrepancies in or between them and where such errors, omissions or discrepancies occur, the Contractor will be governed by the apparent intent of the specifications and plans and by orders of the Engineer. Work performed by the Contractor as a result of an error or omission in the plans and specifications when such error or omission is not called to the attention of the Engineer shall be at the Contractor's risk.

126.06 Shop Drawings, Product Data, Samples, and Submittals: After checking and verifying all field measurements, the Contractor shall approve in writing and submit with reasonable promptness and in such sequence as to cause no delay in the work or in the work of the Owner or any separate contractor, all shop drawings, product data and samples required to be reviewed or tested by the Engineer.

By approving and submitting shop drawings, product data and samples, the Contractor represents that he has determined and verified all materials, field measurements, and field construction criteria related thereto and that he has submittals with the requirements of the work and of the contract documents and that he is satisfied they conform to the contract documents.

Unless otherwise provided in the contract documents, the Contractor shall submit one reproducible copy and six prints of each shop drawing, four copies of product data sheets and two samples.

All required shop drawings, product data and samples shall be furnished to the Engineer for his review and any required testing before any of the work or related work is performed. Products or material ordered prior to the Engineer's review and completion of any testing will be at Contractor's risk.

The Engineer will review all shop drawings, product data and samples and conduct such tests in less than fourteen (14) calendar days after receipt.

All shop drawings and product data shall be made in such a manner that clear and legible reproductions can be made from them. Any shop drawings, product data or samples submitted for review which are, in the Engineer's opinion, carelessly prepared, erroneous, or unchecked will be

returned to the Contractor for redrawing, checking and resubmitting.

Where contents of submitted literature from manufacturers includes data not pertinent to the submittal, the Contractor shall clearly indicate which portion of the contents is being submitted for the Engineer's review.

The Contractor shall direct specific attention in writing on resubmitted shop drawings, product data, or samples to revisions other than those requested by Engineer on previous submittals.

The Contractor shall direct specific attention in writing to each deviation from the contract documents and state any trades, dimensions, functions, or other aspects of the work that will be affected by the proposed change. It is understood that any deviation will be made at no additional cost to the Owner and there will be no extension of the contract time for such deviation.

The Contractor is responsible for the design of any construction changes resulting from any such deviation, for dimensions which shall be confirmed and coordinated at the job site, for fabrication processes and techniques of construction, for coordination of the work with that of all trades and for complete installation which will function as originally specified.

The Engineer will, upon completion of the review, return one copy of all shop drawings, product data, and one sample to the Contractor, and the Contractor will maintain them together with other submittals and the contract documents in good order and available to the Engineer and his representatives at the construction site.

The contract sum shall include the cost of furnishing all shop drawings, product data, and samples, and the Contractor will be allowed no extra compensation for such drawings, product data, or samples.

The review by the Engineer of any shop drawings, product data, samples or other submittals is only for conformance with the general design concept of the project and does not extend to consideration of structural integrity, safety, detailed compliance with contract requirements or any other obligation of the Contractor. Any action shown is subject to the requirements of the plans and specifications. The Contractor is responsible for confirming and correlating all dimensions, fabricating and construction techniques, coordinating his work with that of all other trades, and the satisfactory performance of his entire work in strict accordance with the contract documents. The review is undertaken solely to satisfy the Engineer's obligations to the Owner and does not relieve the Contractor from his obligation to fully perform all contract requirements, nor shall such review give rise to any right of action or suit in favor of the Contractor or third persons against the Engineer or the Owner.

126.07 Quality of Equipment and Materials: In order to establish standards of quality, the Engineer may have referred in detailed specifications to certain products by name and catalog number. This procedure is not to be construed as eliminating from competition other products of equal or better quality by other manufacturers. The word "or approved equal" shall be considered following all such listings regardless of whether they so appear.

The Contractor shall furnish to the Engineer the complete list of proposed desired substitutions in sufficient time prior to their use to give the Engineer adequate time for his review, together with such engineering and catalog data as the Engineer may require. Failure on the part of the Contractor to supply data to the Engineer prior to ordering or using such alternate material or equipment will not relieve the Contractor of furnishing acceptable material or equipment as required by the Engineer.

The Contractor shall abide by the Engineer's judgement when proposed substitute materials or items of equipment are judged to be unacceptable and shall furnish the specified material or item of equipment

in such cases. All proposals for substitutions shall be submitted in writing by the Contractor and not by individual trades or material suppliers. The Engineer will review proposed substitutions within a reasonable time after submission and no substitutions shall be used unless the substitution is accepted in writing.

Any review or acceptance of substitution does not relieve the Contractor from his obligation to fully perform all contract requirements, nor does it give rise to any right of action or suit by Contractor or third persons against Owner or Engineer.

126.08 Specifications by Standard Designation: Whenever practicable, specifications will be made herein by designating certain published "standards" of recognized organizations. Standards will be indicated by the full name of the sponsoring organization or by clearly recognized abbreviations and designation number. In all cases, it shall be understood that such references mean the designated specifications or the latest revision thereof.

126.09 Cooperation with other Contractors: The Contractor shall conduct his operations so as to interfere as little as possible with those of other contractors or subcontractors on or near the work. It is expressly understood that the Owner has the right and may award other contracts in connection with the work so long as it does not unreasonably interfere with the work under this contract.

Where one contractor's operations are within the limits or adjoin the operations of another contractor, each shall be responsible to the other for any damage, injury, loss or expense which may be suffered on account of interference of operations, neglect, or failure to finish work at the proper time or of any other cause.

126.10 Information Regarding Work: The Contractor shall furnish the Engineer every reasonable facility necessary for obtaining such information as he may desire regarding the nature and quality of materials to be used and the progress and manner of the work.

The Engineer shall be allowed access at all times to the books and records of the Contractor, and the Contractor shall furnish him all data necessary for the determination of the actual cost of all or any part of the work.

126.11 Notice to Contractors: Any written notice to the Contractor which may be required by law or by the provisions of the contract documents may be served on the Contractor or his representative, either personally or by mailing to the address given in the contract or by leaving it at such address.

126.12 Notice by Contractors: Wherever in the contract documents the Contractor is required to notify the Engineer for any reason, it shall be understood that such notification is to be made in writing, delivered to the Engineer or his representative in person, or mailed to the office of the Engineer at the address given in the "Notice to Proceed."

126.13 Surveys: The Engineer shall furnish the Contractor with available benchmark and horizontal control data, principal lines, grades, and measurements necessary for the proper prosecution of the work unless otherwise specified in the Technical Specifications or Construction Plans. From benchmarks and horizontal control data furnished by Engineer, the Contractor shall stake out work, establish elevations, and assume responsibility for correctness of installation as to location and grade.

During the prosecution of the work, the Contractor shall make all necessary measurements to prevent misfitting and shall be responsible for the accurate construction of the work.

126.14 Inspection: The Engineer or his representatives shall be allowed access to all parts of the work at all times and shall be furnished every reasonable facility for ascertaining whether the work as performed is in accordance with the requirements and intent of the plans and specifications. The Contractor shall cut and replace with new materials at his own expense such samples as are customarily required for testing purposes. If the Engineer requests it, the Contractor shall at any time before acceptance of the work, remove or uncover such portions of the finished work as may be directed. After examination, the Contractor shall restore the work to the standard required by the specifications. Should the work thus exposed or examined prove acceptable, the uncovering or removing and the replacing of the covering or the making good of parts removed shall be at the Owner's expense. Owner will in any event retain all samples required for the inspection.

126.15 Unauthorized and Defective Work: Any defective work, whether the result of poor workmanship, use of defective materials, damage through carelessness, or any other cause found to exist during construction or after final acceptance, shall be removed immediately and replaced by work and materials which shall conform to the contract documents or shall be remedied otherwise in an acceptable manner authorized by the Engineer. These provisions shall have full effect regardless of the fact that the defective work may have been done or the defective materials used with the full knowledge of the inspector. The fact that the owner may have previously overlooked such defective work shall not constitute an acceptance of any part of it. Work done contrary to or regardless of the instructions of the Engineer, work done beyond the requirements of the contract documents or any extra or additional work done without authority will be considered as unauthorized and will not be paid for by the Owner. Work so done may be ordered removed or replaced at the Contractor's expense.

126.16 Non-Waiver: No act or omission by Owner shall constitute waiver or estoppel of Owner's right to enforce any provision of this Contract.

126.17 Remedies Cumulative: No provision hereof is in lieu of any warranty implied by law. No provision hereof is in lieu of any remedy provided by law. All warranties and remedies are cumulative, and resort to one by Owner shall not be an election over others.

126.18 Final Inspection: Unless otherwise required, the Engineer shall make final inspection of the work included in the contract within a reasonable time after written notification by the Contractor that the work is completed. If the work is approved by the Engineer after inspection, he shall advise the Contractor that the work is completed. If the work is not approved by the Engineer after inspection, he shall advise the Contractor as to the particular defects to be remedied before final approval and recommendation for acceptance can be made to the Owner.

127 Control of Materials

127.01 Materials: Only materials conforming with the contract documents shall be used in the work. Materials which for any reason become unsuitable for use shall be rejected and not used.

127.02 Test of Materials: All tests of materials shall be made in accordance with approved methods as described and designated in the technical specifications. When tests of materials are required, such test shall be made by a testing laboratory approved by the Engineer and at the expense of the Contractor. The Contractor shall provide such facilities as may be required for collecting and forwarding samples and shall hold materials represented by the samples until tests have been made and the materials found equal to the requirements of the specifications.

In the absence of any definite specification or reference to a specification in the technical provisions or in the special provisions for the particular project involved, it shall be understood that such materials and tests shall meet the specifications and requirements of the American Society for Testing Materials. Unless otherwise specified, all tests of materials shall be made in accordance with the methods prescribed by the American Society for Testing Materials.

Upon completion of laboratory testing of materials as specified above, the results of the tests made therein shall be used as a basis for acceptance or rejection in accordance with the specifications for the particular material. Contractor will retain all materials tested.

127.03 Storage of Materials: Materials shall be stored in such manner as to insure the preservation of their quality and fitness for use. Suitable sheds, platforms, and covers shall be provided when necessary to protect materials and the materials shall be stored in such manner as to facilitate inspection.

127.04 Defective Materials: All materials not conforming to the requirements of the contract documents shall be considered as defective. Upon failure on the part of the Contractor to remove, repair, or replace defective material when so ordered by the Engineer, the Owner shall have authority to remove, repair, or replace such defective material and to deduct all costs so incurred from any monies due or to become due the Contractor. Defective material not permitted for use shall be immediately removed from the site or disposed of as directed by the Engineer.

127.05 Ordering Materials: The Contractor is cautioned against placing orders for full quantities of materials until the work has advanced to a state permitting the determination of the exact quantities required. Estimates of quantities of materials furnished by the Engineer are understood to be approximate only and unless otherwise specified, the Owner will in no way be responsible for any materials in excess of actual requirements. The Owner will not be responsible for any increased costs or extra expense that the Contractor may have on account of materials or work not being ordered at some earlier date.

127.06 Materials and Equipment Furnished by Owner: Only materials and equipment specifically indicated in the contract documents shall be furnished by the Owner. The fact that the Owner is to furnish materials or equipment is conclusive evidence of its acceptability for the purpose intended and the Contractor may continue to use it until otherwise directed. Unless otherwise noted or specifically stated, materials or equipment furnished by the Owner which are not of local origin are considered to be f.o.b. the nearest freight station. The Contractor shall be prepared to unload and properly protect all such materials and equipment from damage or loss. Contractor will examine the materials or equipment immediately after delivery or upon commencement of Contractor's performance, whichever is later, and advise Owner of any defects. Failure of the Contractor to so examine or advise Owner of any defects will relieve Owner of any responsibility for defects. The Contractor shall be responsible

for material or equipment loss or damage after receipt at the point of delivery.

127.07 Manufacturer Directions: Manufactured articles, material, and equipment shall be applied, installed, connected, erected, used, cleaned, and conditioned as directed by the manufacturer and must be approved by the Engineer as required by the technical provisions.

128 Prosecution and Progress

128.01 Prosecution of Work: From the time of commencement of the work to the time of completion, the work shall be prosecuted as vigorously and as continuously as possible and always in accordance with a schedule which will insure completion within the specified time limit. There shall be no voluntary shutdown or slowing of operations without prior approval of the Engineer.

If it appears to the Engineer that the rate of progress being made is not such as will insure the completion of the work within the specified time limit, it shall be within the authority of Owner upon notification by Engineer to require Contractor to provide additional equipment and men to take such other steps as may be necessary to insure completion as specified.

128.02 Subletting or Assignment of Contract: The Contractor agrees not to assign, transfer, convey or otherwise dispose of the contract or his right, title, or interest, therein either in whole or in part, or his power to execute such contract to any other person, firm, or corporation, or to subcontract any part of the work without the previous consent in writing of the Owner.

It is understood and agreed that if any part of the work to be done under the contract is subcontracted, the subcontracting shall be done in accordance with, and the Contractor shall be bound by, the following provisions.

All subcontracts shall be in writing and shall provide that all work to be performed thereunder shall be conducted and performed in accordance with the terms of the prime contract. Upon request, certified copies of any or all subcontracts shall be furnished to the Engineer.

In case the work being done or to be done under any subcontract is not conducted in a manner satisfactory to the Engineer, Contractor shall upon written notice to this effect cause such subcontractor to be terminated and the subcontractor and his employees to be removed from the work. Any loss or damage that may be suffered on account of such action shall be borne by the Contractor.

The Contractor agrees that he is as fully responsible to Owner for the acts and omissions of his subcontractors and of persons either directly or indirectly employed by them as he is for acts and omissions of his own employees. Nothing contained in the contract documents shall create any contractual relation between any subcontractor and the Owner.

Insofar as is practical, the Contractor shall make payment for subcontract work in the same units and on the same basis of measurement as apply under the prime contract. The Owner will not be responsible for loss resulting from Contractor's failure to do so. In making payments to subcontractor, Contractor shall protect himself against possibility of overpayment, and he shall assume such losses as may result from overpayment.

The subcontracting of any or all of the work to be done will in no way relieve Contractor of any part of his responsibility under the contract. The Contractor shall have on the work at all times a qualified and capable superintendent whose duty shall be to direct and coordinate the operations of the subcontractors and to make certain orders of the Engineer are compiled with. Failure of Contractor to

control the work of the subcontractors to the satisfaction of the Engineer will result in the issuance of orders requiring the cancellation of the subcontractors and removal of the subcontractors from the work.

128.03 Limitations of Operation: Operations of the various units or portions of the work shall begin at the times and locations approved by the Engineer and shall be prosecuted between such limits as he may establish. No part of the work shall be undertaken without his approval, and no work shall be carried on contrary to his instructions.

In case of a dispute arising between two or more Contractors engaged on the same work as to the respective rights of each under the specifications, the Engineer shall determine the matters at issue and shall define the respective rights of the various interests involved in order to secure the completion of all parts of the work in general harmony and with satisfactory results, and his decision shall be final and binding on all parties concerned.

128.04 Utilities: The Contractor, at his expense, shall provide electricity, power, heat, oil, gas and other utilities necessary to perform the work, unless otherwise stated by the Engineer.

128.05 Use of Premises: The Contractor shall confine his apparatus, the storage of materials and the operations of his workmen to limits indicated by law, ordinances, permits or directions of the Engineer and shall not unreasonably encumber the premises with his materials.

The Contractor shall not load or permit any part of a structure which he is constructing under this contract to be loaded with a weight that will endanger its safety, and he shall not use any such structure for any purpose except as provided in the contract documents.

128.06 Protection of Work and Property: The Contractor shall continuously maintain adequate protection of all his work from damage and shall protect the Owner's property from injury or loss arising in connection with this contract. He shall adequately protect adjacent property as provided by law and these contract documents.

The Contractor shall erect and properly maintain at all times, as required by the conditions and progress of the work, all necessary safeguards for the protection of workmen and the public and shall post danger signs warning against the hazards created by such features of construction as protruding nails, hoists, well holes, elevator hatchways, scaffolding, window openings, stairways and falling materials; and he shall designate a responsible member of his organization whose duty shall be the prevention of accidents. The name and position of the person so designated shall be reported to the Engineer by the Contractor.

In an emergency affecting the safety of life or of the work or of adjoining property, the Contractor, without special instruction or authorization from the Engineer or Owner, is hereby permitted to act, at his discretion, to prevent such threatened loss or injury and he shall so act without appeal if so instructed or authorized. Any compensation claimed by Contractor on account of emergency work shall be determined by negotiation or as a claim for extra compensation.

128.07 Workmen and Equipment: The Contractor shall employ only competent and efficient laborers, mechanics, or artisans, and whenever in the opinion of the Engineer any employee is or becomes unsatisfactory for the work assigned to the employee the Contractor shall upon request of the Engineer remove him from the work and not employ him again upon it.

The methods, equipment and appliances used and the quantity and quality of the personnel employed on the work shall be such as will produce a satisfactory quality of work and shall be adequate to complete the contract within the time limit specified.

128.08 Time of Completion of Work: At the Engineers request, Contractor shall, before commencing any work, prepare and furnish an estimated progress schedule for the entire project.

128.09 Termination of Contract by Owner: If the Contractor should be adjudged bankrupt or if he should make a general assignment for the benefit of his creditors or if a receiver should be appointed on account of his insolvency or if he should persistently or repeatedly refuse or should fail to supply enough properly skilled workmen or proper materials for the efficient prosecution of the project or if he should fail to make prompt payment to subcontractors or for material or persistently disregard the laws, ordinances, or the instructions of the Engineer, or otherwise fail to comply with any provision of the contract, then the Owner, upon the certificate of the Engineer that, in his opinion, sufficient cause exists to justify such action, may without prejudice to any other right or remedy and after giving the Contractor and his surety seven (7) days written notice, terminate the Contractor and take possession of the premises, or any part thereof, and of all materials, tools, equipment, machinery, and appliances thereon and finish the work, or any part thereof, by whatever method it may deem expedient.

Neither by the taking over of all or any portion of the work nor by its completion in accordance with the terms of this provision shall the Owner forfeit its right to recover damages from Contractor or from Contractor's surety for failure to complete or for delay in such completion. Should the expense incurred by Owner in taking over and completing any or all of the work, including without limitation any additional administrative or engineering expense, be less than the sum that would have become payable under this agreement if the work had been completed by the Contractor, then Contractor shall be entitled to the difference with no interest, and should such expense exceed the said sum, then Contractor and Contractor's surety shall be liable to the Owner for the amount of such excess. Upon the taking over of the work by Owner as herein provided for, no further payment will be made to Contractor until the work is completed, and any monies due or that may become due contractor under this agreement may be withheld and applied by Owner to payments for labor, materials, supplies and equipment used in the prosecution of the work, and/or for the payment or rental charges on equipment used therein, or to the payment of any excess cost to Owner incurred in completing the work. The election by owner to take over any of the work shall not constitute Owner's sole remedy, but rather Owner reserves all other remedies at law or in equity upon default or breach of contract.

The Contractor and its surety shall likewise be liable for any expenses incurred by Owner in assisting Contractor to complete the contract.

128.10 Right of the Owner to Do Work: If Contractor should neglect to prosecute the work properly or fail to perform any provision of the contract, Owner after three (3) days written notice to Contractor may without prejudice to any other remedy it may have, make good such deficiencies and deduct the cost thereof from the payment then or thereafter due Contractor.

128.11 Contractor's Right to Stop Work or Terminate Contract: If Engineer should fail to issue any certification for a legitimate payment within ten (10) days after it is due or if Owner should fail to pay Contractor within forty-five (45) days of its presentation any sum certified by the Engineer and approved by Owner, Contractor may upon seven (7) days written notice to Owner and Engineer stop work or terminate this contract and recover from Owner payment for all work executed and any loss sustained upon any parts or materials and reasonable profit.

128.12 Owner's Right to Terminate Contract: The Owner reserves the right to terminate this contract for any such reason in its discretion considered to be in the public interest or if it is suspended by an order of any public agency. In the event of such termination, the amount to be paid to Contractor shall be determined by contract price in the case of any fully completed

separate item or portion of the work for which there is a separate or unit price and, in respect to any other work, a percentage of the contract price equal to the percentage of the work completed as determined by Engineer.

128.13 Venue and Attorney's Fee: In the event there is any dispute between the parties arising out of this agreement, venue shall be determined in Kerr County, Texas.

128.14 Temporary Suspension of Work: The Engineer will have authority to suspend the work, wholly or in part, for such period as he may consider necessary, and the "Time Change" will be suspended during such period. Notice of such suspension with the reasons there will be given the Contractor in writing.

129 Measurement and Payment

129.01 Methods of Measurement and Computation: All work completed under the contract shall be measured by Engineer according to United States standard measures.

The methods of measurement and computation to be used in the determination of the quantities of materials furnished and the quantities of work performed under the contract shall be the methods outlined in the contract documents or by those methods generally recognized as good engineering practice which in the opinion of Engineer give the greatest accuracy consistent with practicable application.

129.02 Scope of Payment: The Contractor shall accept the compensation as herein provided in full payment for furnishing all materials, labor, tools and equipment and for performing all work under the contract, and for all loss, damage, or liability arising from any unforeseen difficulties which may be encountered during the prosecution of the work until its final acceptance by Owner.

129.03 Payment Retainage: Five Percent (5%) retainage will be withheld from each payment request. All retainage will be paid at completion and acceptance of the project.

129.04 Payment for Materials on Omitted Items: Acceptable materials ordered by Contractor or delivered on the work prior to the date of cancellation or suspension of the work by order of Owner may be purchased from the Contractor by Owner at actual cost and thereupon become the property of the Owner.

129.05 Progress Payments: At a regular period each month, Engineer shall make an estimate of the amount of work completed and of the value of such completed work based on a request submitted by the Contractor. He shall also make an estimate of the amount and value of acceptable material to be incorporated in the completed work which has been delivered and properly stored at or near the site or at an acceptable location to the Engineer. With these estimates as a base, a progress payment shall be made to Contractor.

The Engineer may withhold, or on account of subsequently discovered evidence, nullify the whole or part of any payment certificate to such extent as may be deemed necessary to protect Owner from loss on account of:

a. Defective work not remedied.

b. Claims filed or reasonable evidence indicating probable filing of claims.

c. Failure of Contractor to make payments properly to subcontractors or for materials or labor.

d. A reasonable doubt in the opinion of the Engineer that the contract can be completed for the balance then unpaid.

e. Damage to another Contractor.

f. Reasonable indication that the work will not be completed within contract time.

g. Unsatisfactory prosecution of the work by Contractor.

h. Failure of Contractor to comply with any other order of Engineer made in accordance with the contract documents.

In the event the amount due Contractor under estimate for any given month is less than five hundred ($500.00), no payment need be made by Owner for that month.

Progress payments shall not be construed as an acceptance or approval of any part of the work covered thereby, and shall in no manner relieve Contractor of responsibility for defective workmanship or material.

The estimates upon which progress payments are based are not represented to be accurate estimates, and all quantities shown therein are subject to correction in the final estimate. If Contractor uses such estimates as a basis for making payments to subcontractors, he does so at his own risk and he shall bear all loss that may result.

The making of progress payments under the contract either before or after the date set for completion of the work shall not operate to invalidate any of the provisions of the contract or to release the surety.

At the time payment is made for any materials which have been stored at or near the site, the ownership of such materials shall be vested in Owner, and they shall remain in storage until used on the work. Such materials shall not be used on other work. The risk of damage or loss of materials due to disappearances, theft, casualty, or other, shall be upon the Contractor.

129.06 Advances on Materials: For materials delivered and held in storage at the site with the prior approval of Engineer (or near the site of the work if approved by Engineer), allowances may be made in the progress payments to Contractor. No allowance shall be made upon fuels, supplies, form lumber, framework or other materials, or on temporary structures of any kind which will not become an integral part of the finished construction.

As a basis for determining the amount of advances on materials, the Contractor shall make available to Engineer such invoices, freight bills, and other information concerning the materials in question as Engineer may request. Should there be reasonable evidence in the opinion of Engineer that Contractor is not making prompt payments for material on hand, allowances for material on hand will be omitted from progress payments.

129.07 Allowances for Materials Left on Hand: Materials not required by the unit or lump sum contract but delivered to work at the order of Engineer but left unused due to changes in plans, will, if the materials are not practicable returnable for credit, be purchased from Contractor by Owner at actual cost (without percentage allowance and profit) and shall thereupon become the

property of Owner.

129.08 Final Estimate: As soon as the complete project has passed inspection by the Engineer, he will so notify Owner and Contractor in writing. The Engineer will then prepare the final estimate and recommend acceptance. Upon acceptance of the completed project and the final estimate by Owner, Contractor will be paid an amount such as will make the total payments equal to the final total contract price less the retained percentage. This payment will be made at the same time in the month and in the same manner as provided for monthly estimates.

The Contractor will be entitled to payment of the retainage thirty (30) days after acceptance of the work. The Owner may retain such sums as necessary for all incomplete or defective work or unsettled claims of owner or third parties against Contractor. As a condition of payment, Owner may require sufficient evidence that all indebtedness of Contractor connected with the work has been paid and may require releases on waivers or liens in a form satisfactory to Owner from all parties performing the work.

129.09 Guarantee and Correction of Work After Final Payment: Neither the final certificate nor payment nor any provision in the contract documents shall relieve the Contractor of responsibility for faulty materials or workmanship.

129.10 Payments: Payments under the contract shall be paid by check by Owner unless otherwise provided by the contract documents.

129.11 Certificate of Compliance: No final payment of the retained percentage shall be made until Contractor files with Owner following acceptance of the work a Certification of Compliance in form substantially as follows:

> I (we) hereby certify that all work has been performed and materials supplied in accordance with the plans, specifications, and contract documents for the above work and that:
>
> a. There have been no unauthorized substitutions of subcontractors, and no subcontracts been entered into without the names of the subcontractors having been submitted to the Engineer prior to the start of such subcontracted work.
> b. No subcontract was assigned or transferred or performed by any subcontractor other than the original subcontractor without prior notice having been submitted to Engineer together with the names of all subcontractors.
> c. All claims for material and labor and other service performed in connection with these specifications have been paid.

129.12 Savings: To the best knowledge and belief of the parties, this agreement contains no provision that is contrary to any law or to any ruling or regulation of a federal or state agency. Should any provision of this agreement at any time be in conflict with any such law, ruling or regulation, then such provision shall continue in effect only to the extent that it remains valid. In the event any provision of this agreement become thus inoperative, the remaining provisions of this agreement shall nevertheless remain in full force and effect.

130 Technical Specifications

131 General Information

131.01 References: TECHNICAL SPECIFICATIONS are of the abbreviated, simplified, or streamlined type and include incomplete sentences. The omission of words or phrases such as "Contractor shall", "in conformity therewith", "shall be", "as noted on PLANS", "according to PLANS", "a", "an", "the", and "all", are intentional. Omitted words or phrases shall be supplied by inference in same matter as they are when a "note" occurs on PLANS.

The TECHNICAL SPECIFICATIONS are interpreted to require that Contractor shall provide all items, articles, materials, operation or methods listed, mentioned, or scheduled either on PLANS or specified herein, or both, including all labor, materials, equipment, and incidentals necessary and required for their completion.

Whenever the words "approved", "satisfactory", "designated", "submitted", "observed", or similar words or phrases are used, it shall be assumed that the word "Engineer" follows the verb as the object of the clause, such as "approved by Engineer".

All references to standard TECHNICAL SPECIFICATIONS or manufacturer's installation directions shall mean the latest edition thereof.

Reference to technical society, organization, or body is made in TECHNICAL SPECIFICATIONS in accordance with following abbreviations:

AASHTO	American Association of State Highway and Transportation Officials
ACI	American Concrete Institute
AISC	American Institute of Steel Construction
AISI	American Iron and Steel Institute
ANSI	American National Standards Institute (Formerly ASA)
API	American Petroleum Institute
ASTM	American Society for Testing and Materials
AWS	American Welding Society
AWWA	American Waterworks Association
FS	Federal Specifications
IEEE	Institute of Electrical and Electronic Engineers
IPCEA	Insulated Power Cable Engineers Association
NEC	National Electric Code
NEMA	National Electrical Manufacturers Association
NSF	National Sanitation Foundation
PCA	Portland Cement Association
PCI	Prestressed Concrete Institute
PTI	Post-Tensioning Institute
SSPC	Steel Structures Painting Council
TCEQ	Texas Commission on Environmental Quality
UL	Underwriters' Laboratories

Some TECHNICAL SPECIFICATION items cover construction requirements and materials in

comprehensive manner, and only pertinent portions of these items apply.
131.02 Lands for Work: Owner provides, as indicated on PLANS, land upon which work is to be done, rights-of-way for access to same, and such other lands which are designated for use of Contractor. Contractor provides, at his expense and without liability of Owner, any additional land and access thereto that may be required for his construction operations, temporary construction facilities, or for storage of materials.

131.03 Lines and Grades: From bench marks and horizontal control references established by Engineer, the Contractor shall stake out work, establish elevations, and assume responsibility for correctness of installation as to location and grade.

Where provided for in contract or construction plans, Engineer will set stakes one time only. Contractor must satisfy himself, before commencing work, as to meaning and correctness of all stakes or marks, and no claim will be entertained for or on account of any alleged inaccuracies, or for alterations subsequently rendered necessary on account of such alleged inaccuracies, unless Contractor notifies Engineer in writing before commencing to work thereon.

Contractor is to protect stakes and pay all costs involved in any re-staking.

131.04 Utility Services for Construction: Contractor will provide all utilities necessary for construction at no additional cost to Owner unless otherwise specified in preceding Special Provision.

131.05 Materials Testing: Contractor provides for tests of materials unless otherwise specified. Notify Engineer prior to manufacture or fabrication of items so that observation may be accomplished and furnish field samples of materials for testing.

131.06 Variations Due to Equipment: Foundations, structural supports, electrical work, and piping shown on PLANS for items of equipment may be changed if necessary to accommodate equipment furnished. Every effort has been made to design foundations, structural supports, electrical work, and piping so that no changes will be necessary; however, exact dimensions and size of subject foundations and structural supports and exact electrical and piping installations cannot be finally determined until various items of equipment are purchased and manufacturer's certified shop drawings are secured. Make required changes, after prior consultation with Engineer, at no cost to Owner.

If substitute items of equipment are authorized which vary materially from those shown on PLANS, prepare equipment data and detailed drawings covering necessary modifications and submit to Engineer for approval Make drawings same size as Contract PLANS and of comparable quality. Make payment of charges resulting from modifications, including engineering charges for checking modifications.

131.07 Alternate Designs: If alternate design features are proposed for convenience of Contractor, submit design calculations an detail drawings covering proposed changes and related modifications of Contract PLANS to Engineer for review. Make drawings same size as Contract PLANS and of comparable quality. Make payment of charges resulting from modifications, including engineering charges for checking such designs.

131.08 Shop Drawings: Furnish Engineer six copies of shop and erection drawings, schedules, and data sheets covering items of construction and equipment listed below:

1. Structural and miscellaneous steel and steel tanks.

2. Architectural products.

3. Reinforcing steel.

4. Prestressed reinforced concrete members.

5. Fiberglass wet wells for lift stations, etc.

6. Mechanical equipment, including valves and sluice gates.

7. Electrical equipment, including instruments.

8. Special items, as directed.

Contractor will check and approve shop drawings for compliance with requirements of Contract and will so certify by stamp on each drawing prior to submittal to Engineer. Any drawings submitted without Contractor's stamp of approval will not be considered and will be returned to him for proper submission.

Engineer will pass promptly upon drawings submitted, noting necessary corrections or revisions. If Engineer rejects drawings, resubmit corrected drawings until drawings are acceptable to Engineer as being in conformance with design concept of project and for compliance with information given in the Contract Documents. Such procedure shall not be considered cause for delay. Acceptance of drawings by Engineer does not relieve Contractor of any requirements of terms of Contract.

131.09 Operation and Maintenance Manuals: Operation and maintenance manuals are to be provided where required by Specification Item.

Contractor to be responsible for obtaining installation, operation, and maintenance manuals from manufacturers and suppliers for equipment furnished under the contract. Submit three copies of each complete manual to the Engineer within 90 days after approval of shop drawings, product data, and samples, and not later than the date of shipment of each item of equipment to the project site or storage location.

Operations and maintenance manuals specified hereinafter are in addition to any operation, maintenance, or installation instructions required by the Contractor to install, test, and start up equipment.

Each manual to be bound in a folder and labeled to identify the contents and project to which it applies.

The manual to contain the following:

1. An 8 1/2-inch x 11-inch typewritten sheet listing the manufacturer's identification, including order number, model, and serial number and location of parts and service centers.

2. A separate 8 1/2-inch x 11-inch typewritten list of recommended stock of parts, including part number and quantity.

3. Complete replacement parts list.

4. Performance data and rating tables.

5. Specific instructions for installation, operation, adjustment, and maintenance.

131.10 Cost Breakdown: Within 15 days after execution of Contract, submit, in acceptable form, schedule showing subdivision of Contract into various items of permanent construction, stating quantities and prices, as basis for computing value to Owner of permanent usable parts of facility to be paid for on monthly estimates. No payment will be made to Contractor until such schedule has been submitted and approved.

131.11 Progress Schedule: Within 15 days after execution of Contract, submit in acceptable form, anticipated progress schedule covering work to be performed.

131.12 Guarantees: Guarantee work, including equipment installed, to be free from defects due to faulty workmanship or materials for period of one year from date of issue of Certificate of Acceptance. Upon notice from Owner, repair defects in all construction which develop during specified period at no cost to Owner. Neither final acceptance nor final payment nor any provision in Contract Documents relieves Contractor of above guarantee. Notice to observed defects will be given with reasonable promptness. Failure to repair or replace defect upon notice entitles Owner to repair or replace, same and recover reasonable cost thereof from Contractor and/or his Surety.

131.13 Site Maintenance and Clean-up: Maintain sites of work during construction to keep them reasonably neat and free of trash, rubbish, and other debris. In clean-up operations, remove from sites of work and from public and private property, temporary structures, rubbish, and waste materials. Dispose of excavated materials beyond that needed to bring site to elevations shown. During final clean-up, any road constructed by Contractor for access to construction site to be leveled and ruts filled so that natural surface drainage is not hindered.

131.14 Materials and Equipment: Incorporate into work only new materials and equipment of domestic manufacture unless otherwise designate. Store these materials and equipment in manner to protect them from damages. Manner of protection subject to specific approval of Engineer. Pipe, fittings, equipment, and other serviceable materials found on site of work, or dismantled by reason of construction, remain property of Owner. Remove and deliver materials to Owner at designated points. Pay, at prevailing market price, for usable materials that are damaged through negligence.

131.15 Subsurface Exploration: It is not represented that PLANS show all existing storm sewer, sanitary sewer, water, gas, telephone, and electrical facilities, and other underground structures. Determine location of these installations in way of construction by referring to available records, consulting appropriate municipal departments and utility owners, and by making necessary exploration and excavations.

131.16 Deviations Occasioned by Utility Structures: Whenever existing utilities, not indicated on PLANS, present obstructions to grade and alignment of pipe, immediately notify Engineer, who without delay, will determine whenever existing improvements are to be relocated, or grade and alignment of pipe changed. Where necessary to move services, poles, guy wires, pipelines, or other obstructions, make arrangements with owners of utilities. Owner will not be liable for damages on account of delays due to changes made by owners to privately owned utilities which

hinder progress of work.

131.17 Protection and Replacement of Property: Where necessary to take down fences, signs, or other obstructions, replace in their original condition and restore damaged property or make satisfactory restitution, at no cost to Owner.

131.18 Interruption of Utility Services: Operate no valve or other control on existing systems. Exercise care in performing work so as not to interrupt service. Locate and uncover existing utilities ahead of heavy excavation equipment. At house connections, either lift trenching machine over lines or cut and reconnect with minimum interruption of service, as approved.

131.19 Protective Measures: Where construction creates hazard to traffic or public safety, furnish and maintain suitable barricades, warning signs, and lights. Remove same when no longer necessary.

131.20 Use of Streets:

1. Remove, as soon as practicable, accumulated rubbish and open each block for public use. Use of any portion of street shall not constitute acceptance of any portion of work. Backfill and shape trenches across street intersections or driveways for safe traffic at night or, where permitted, span open trenches with wooden mats or bridges to permit traffic flow. When driveways are cut, immediate placement of mats for ingress or egress of vehicles may be directed if undue hardship to property owner would otherwise result.

2. Except where approved otherwise, do not hinder or inconvenience travel on streets or intersecting alleys for more than two blocks at any one time. Whenever street is closed, place properly worded sign announcing fact to public, with proper barricades at nearest street corners, on both sides of obstruction. Leave no street or driveway blocked at night.

3. When street is closed, notify Fire Department, and Police Department.

4. Do not block ditches, inlets, fire hydrants, etc., and, where necessary, provide temporary drainage.

140 General Provisions

141 Definitions

"Act of God" - An earthquake, flood, cyclone, or other cataclysmic phenomenon of nature.

"Addendum" - Any written or graphic modification or interpretations of the contract document issued by the Engineer.

"Bid" - The signed, written bid of the bidder on the form furnished, indicating total price for the work in completed form as per the plans and specifications.

"Bid Bond" - The form of security approved by the Owner and furnished by the Contractor, guaranteeing that he will enter into a contract in accordance with the contract documents if his bid is accepted.

"Bidder" - Any individual, firm, or corporation formally submitting a proposal for the work contemplated or any portion thereof, acting directly or through an authorized representative.

"Contract Sum" - The total amount payable to the Contractor for the work, which shall include sales, use, and other consumer taxes related to the work.

"Contractor" - The individual, firm, or corporation undertaking the execution of the work under the terms of the contract and acting directly through his agents or employees.

"Engineer" - The City Engineer for the City of Kerrville, Texas or his designated representative.

"Notice to Proceed" - The written notice given by the Owner to the Contractor fixing the date on which Contractor shall commence to perform his obligation under the contract documents.

"Owner" - The City of Kerrville, Texas.

"Payment Bond" - The form of security approved by the Owner and furnished by the Contractor and his surety guaranteeing payment of all labor, material, equipment, and all other obligations arising out of the work.

"Performance Bond" - The form of security approved by the Owner and furnished by the Contractor and his surety guaranteeing the complete and faithful performance of all of the obligations and conditions placed upon the Contractor by the contract.

"Plans" -The maps and drawings together with any supplements furnished by the Engineer.

Product Data" - Complete catalog data for the manufactured items of equipment and all component parts, including specific performance data, material description and source, rating, capacity, working pressure, material gauge or thickness, brand name, catalog numbers, and other necessary information.

"Right-of-Way" - The area (either temporary or permanent) provided by the Owner for use in constructing the work covered by the contract, including the appurtenances thereto.

"Shop Drawings" - All diagrams, drawings, illustrations, brochures, schedules, and all other data submittals required by the contract to be furnished by the Contractor illustrating fabrication, installation, dimensions, and other aspects of the work.

"Specifications" - The directions, requirements, explanations, terms and provisions pertaining to the various features of the work to be done, the manner and method of performance, and the manner and method of measurement and payment (Specifications include such directions, requirements, and explanations as appear on the plans).

"Subcontractor" - Any individual, firm, or corporation having a contract with the Contractor or with any other subcontractor for the performance of a part of the work.

"Substantial Completion" - The date when the work or specified part thereof it sufficiently completed in accordance with the contract so that the project or a specified part can be used for the purposes for which it was intended.

"Work" - The furnishing of all labor, materials, equipment, and other incidentals necessary or convenient to the successful completion of the project or the portion of the project involved and the carrying out of all the duties and obligations imposed by the contract.

"Written Notice" - A written communication delivered in person to the individual or to a member of

the firm or to an officer of the corporation for whom it is intended or delivered or sent by mail to the last business address known to the one who gave the notice. (It shall be the duty of each party to advise the other parties to the contract as to any change in business address until completion of the contract.)

142 Bonds

The Contractor shall within ten (10) days from the date Owner signs the Notice of Award furnish to the Owner and maintain in force during the continuance of the work a performance and a labor and material payment bond satisfactory to the Owner and with such surety or sureties as the Owner may approve. The bonds shall be in the full amount of the contract price. If the bonds are not so furnished within such ten (10) days, the contract may be immediately terminated by the Owner without any notice to the Contractor. No work may commence until the bonds have been approved by the Owner. The bonds shall be executed by a surety company authorized to do business within the State, shall be subject to the approval of the attorney of the Owner, and shall remain in effect during the period of Contractor's guarantee.

If the Contract amount should be less than Twenty-Five Thousand ($25,000.00) Dollars, the Contractor shall have the option of providing Performance and Payment Bonds as required or payment for the work performed shall be in accordance with these specifications. Final Estimate, once the work has been accepted and approved by the Owner.

150 Legal Relations and Responsibility to the Public

151 Responsibilities

151.01 General: Contractor shall, at his own expense, comply with all applicable federal, state, and local laws, regulations, and standards including without limitation those governing labor, safety, health, and sanitation.

151.02 Permits and Licenses: The Contractor shall produce all permits and licenses and give all notices necessary and incident to the due and lawful prosecution of the work. The City of Kerrville will waive all permit and connection fees.

151.03 Public Safety and Convenience: The Contractor shall be solely and completely responsible for conditions of the job site, including safety of all persons and property during performance of the work. This requirement shall apply continuously and not be limited to normal working hours. Any review by the Engineer of the Contractor's performance does not, and is not intended to, include review of the adequacy of the Contractor's safety measures in, on or near the construction site.

The Contractor shall at all times so conduct his work as to insure the least possible obstruction to traffic. The convenience of the general public and the protection of persons and property are of prime importance and shall be provided for by the Contractor in an adequate and satisfactory manner.

The Contractor shall conduct the work so as to cause a minimum of inconvenience to traffic at intersections and connecting streets and to persons operating commercial enterprises or residing along the route of work. Entrances to residences, garages, service stations, business places and driveways of all kinds shall not be blocked for more than a few hours, if at all. Satisfactory means of ingress and egress for persons residing or transacting business along the route of the work shall be maintained all times. The Contractor shall not work before 7:00 a.m. or after 6:00 p.m. without written permission of

the Engineer.

Adequate sanitary conveniences for the use of persons employed on the work properly secluded from public observation, shall be constructed and maintained by the Contractor in such a manner and at such points as shall be approved by the Engineer. These conveniences shall be maintained at all times without nuisance and their use shall be enforced. Upon completion of the work, they shall be removed form the premises, leaving all clean and free from nuisance.

151.04 Barricades, Warning Signs and Flagmen: The Contractor shall at his expense and without further or other order provide, erect and maintain at all times during the progress or temporary suspension of the work suitable barricades, fences, signs or other adequate warnings or protection, and shall provide, keep and maintain such danger lights, signals, and flagmen as may be necessary to insure the safety of the public as well as those engaged in connection with the work. All barricades and obstructions shall be protected at night by signal lights which shall be suitably distributed across the roadway and which shall be kept burning from sunset to sunrise. The Contractor shall provide all barricades and the placement of all barricades shall meet the requirements as provided within Part VI, Texas Manual on Uniform Traffic Control Device for Streets and Highways.

Failure of the Engineer to notify the Contractor to maintain barriers, lights, signals, or flagmen shall not relieve the Contractor from this responsibility. The Contractor will be required, at the request of the Engineer, to produce a Traffic Control plan and submit this to the City Engineer for approval.

All traffic control devices and procedures used by the Contractor in controlling, directing, and safeguarding traffic shall conform to the requirements of the "Texas Manual on Uniform Traffic Control Devices".

The Contractor's responsibility for the safeguarding of traffic as specified above shall cease when the work included in the contract is completed and accepted by the Owner.

151.05 Fences: By the construction of temporary fences or by other adequate means, the Contractor shall restrain stock from leaving the lands wherein they are confined, or from trespassing which would be made possible, or which might result from, the removal or destruction of existing fences or the carrying out of any part of the work under the contract. The Contractor shall be responsible for all loss, injury or damage that may result from his failure to restrain stock as above provided. The expense for erecting and maintaining temporary fences and for otherwise providing for the restraint of stock shall be borne by the Contractor.

151.06 Safeguarding of Excavations: The Contractor shall provide such safeguards and protections around and in the vicinity of excavations as may be necessary to prevent and avoid the occurrence of damage, loss, injury and death to property and persons because of such excavations. Liability for such damage, loss, injury or death shall rest with the Contractor.

151.07 Use of Explosives: In the use and storage of explosives, the Contractor shall use every precaution to prevent injury to persons and damage to property. Secure storage places shall be provided and all such places shall be clearly marked with warning signs. Only persons experienced in the handling of explosives shall be used on the project. No blasting shall take place until a warning has been sounded and all persons within the radius of danger removed. In the handling and storage of explosives, the Contractor must comply with all Federal, State and local laws, and the Owner and Engineer will in no way be responsible for damages to property or injury to persons resulting from explosions.

When explosives are used, particularly in proximity to buildings or other structures, care shall be taken to protect the surroundings from injury by explosion, resultant concussion or by flying rocks or debris.

The quantities of explosives and manner of their use shall be such that adjacent property will not be damaged. In case the vicinity of the work is accessible to the general public, the Contractor shall, before any explosives are used, post men about the work in various directions to warn all persons of the danger existing and to prevent them from approaching more closely than safety will permit.

151.08 Trespass: The Contractor will be solely responsible for any trespass upon adjacent property or injury thereto resulting from or in connection with his operations. He will be liable for any claims that may be made on account of trespass or the deposit of debris of any kind upon private property.

151.09 Protection of Property and Persons: In the performance of the work to be done under the contract, the Contractor shall use every reasonable and practical means to avoid damage to property, injury to persons and loss, expense, inconvenience and delay to property owner, users of streets or highways and others. He shall provide protective devices and flagmen where ever and when ever needed in affording this protection and in the performance of the work, and shall use no means or methods which will unnecessarily endanger either persons or property.

At points where the Contractor's operations are adjacent to properties of railway, telegraph, telephone, water, gas, or other pipeline or power companies, or are adjacent to other property, work shall not be commenced until all arrangements necessary for the protection of the interests of the Owner as well as any interest that a third party may have therein, have been made.

All utility companies shall be advised by the Contractor of the work proposed under this Contract and of the necessary adjustments to their respective installations. The Contractor shall communicate with all utility companies at least three (3) days in advance before commencing any work in areas where utilities are located.

The Contractor shall be on the alert for any additional utilities which he may encounter in the course of the operations. If additional utilities are discovered, the Contractor shall immediately take steps to protect the utility and notify the Engineer and the utility owner.

In case of damage to any utilities by the Contractor, either above or below the ground, the Contractor shall restore such utilities to a condition equal to that existing before the damage was done. Any and all costs incurred for such restoration shall be borne entirely by the Contractor.

The Contractor shall take into consideration the adjustments of installations by public utilities in areas within the limits of the contract in preparing his proposal. No additional compensation will be allowed for work interruptions, changes in handling, excavation, drainage and paving, changes in types of equipment used, etc. caused by others performing work within the limits of the contract.

151.10 Restoration of Damaged Property: All damage and injury to property that may be caused by or that may result from the carrying out of the work to be done under the subcontractors, or his employees, shall promptly be made good by the Contractor either by the repairing, rebuilding, or replacing of the property damaged or in some other manner satisfactory to the Owner of such property. In case of failure on the part of the Contractor to promptly and satisfactorily make good damage or injury, the Owner may without notice to the Contractor proceed to repair, rebuild, or replace such property as may be deemed necessary, and the cost thereof will be deducted from any monies due or which may become due the Contractor under the contract.

In applying the provisions above stated, the repairing, rebuilding or replacing of damaged property shall be understood to include the providing of any temporary facilities that may be needed to maintain normal service until the required repairing, rebuilding or replacing is accomplished.

151.11 Contractor's Responsibility for Work: Until final acceptance of the contract, the Contractor will

be responsible for any injury or damage to the work or any part thereof or to materials, equipment, or supplies due to any cause whatsoever, and he shall make good at his own expense all such injuries or damages.

151.12 No Personal Liability of Engineer: The exercise of all responsibility, power, and authority by Engineer or his representative is undertaken solely to satisfy Engineer's obligation to Owner. It shall not give rise to any claim against nor impose liability to Engineer or his representatives in favor of Contractor or third persons for any reason whatsoever and Contractor agrees that any remedy he has arising out of in connection with Engineer's performance hereunder, whether neglect or otherwise, is against Owner and not Engineer.

151.13 No Waiver of Legal Rights: The Owner shall not be precluded by any measurement, estimate, or certificate made either before or after the completion and acceptance of the work and payment therefor from showing the true amount and character of the work performed and materials furnished by the Contractor, or from showing that any such measurement, estimate or certificate is untrue or incorrectly made, or that the work or materials do not conform in fact to the contract. The Owner shall not be precluded, notwithstanding any such measurement, estimate or certificate, and payment in accordance therewith, from recovering from the Contractor and his sureties such damages as the Owner may sustain by reason of the Contractor's failure to comply with the terms of the contract or of any power herein reserved or any right to damages herein provided.

151.14 Payment of Bills by Contractors: The Contractor shall promptly make full payment for labor, material, supplies, and provisions at such times as they become due and payable to all persons supplying said Contractor or his subcontractor with labor, services, materials, supplies, or provisions for the prosecution of the work provided for the contract, and he shall not permit any lien or claim to be filed or persecuted against Owner for or on account of any labor, service, material, supplies or provisions furnished.

In the event that Contractor fails, neglects, or refuses to make prompt and full payment of any claim for labor, services, materials, supplies, or provisions furnished by any person in connection with the contract, whether the labor, services, materials, supplies, or provisions to be performed or are furnished for the Contractor or for a subcontractor, then, and in such event, the Owner may withhold the amount of such claim by the person or persons furnishing such labor, services, materials, supplies, or provisions and deduct the amount thereof from funds due or to become due to the Contractor by reason of the contract. The deduction of any such amounts because of claims in the manner therein authorized will not, however, relieve the Contractor or his surety from their obligations with respect to any unpaid claims.

151.15 Use of Completed or Uncompleted Portions: The Owner shall have the right to take possession of and use any completed or partially completed portions of the work, notwithstanding that the time for completing the entire work or such portions may not have expired, but such taking possession and use shall not be deemed an acceptance of any work not completed in accordance with the contract documents. If such prior use increases the cost of or delays the completion of uncompleted work or causes refinishing of completed work, the Contractor shall be entitled to such extra compensation or extension of time or both as the Engineer may determine.

Street Specifications
Section 200

210 Pavement Design Criteria

211 General Information

211.01 Design Criteria: All streets shall be constructed on a compacted or stabilized subgrade, shall consist of a base and surface course, shall take into account subsurface drainage where appropriate (hills and natural springs), and shall meet the minimum requirements as set forth in the table below. The City Engineer may consider or allow variances from the table below submitted by a Licensed Professional Engineer (Texas) based on a geotechnical analysis (plasticity index and sieve analysis, 30 year design life) of the site and documentation of the design shall be submitted with the construction plans.

Pavement Design Criteria for HMAC Roads:

Road Classification	*Subgrade Depth of Compaction	Base Course Depth Type 'B' HMAC	Surface Course Depth Type 'D' HMAC	**Width (FT)	***ROW Width (FT)	Design Speed (mph)
Alley	6"	4"	2"	15	20	20
Access	6"	4"	2"	20	40	30
Residential	6"	4"	2"	30	50	30
****Collector	6"	6"	2"	42	60	30
Alternative Collector	6"	6"	2"	36	60	30
Secondary Arterial	6"	8"	2"	48	86	45
Principal Arterial	6"	8"	2"	2 - 24' lanes with 12' raised median	100	45

*Subgrade shall be compacted to 95-100% of Standard Proctor (ASTM D-698) to a depth of 6 inches, Subgrades with "Moisture Sensitive" material shall be treated with one of the four options outlined in Section 212

** Pavement width is measured from back of curb to back of curb, see Kerrville Comprehensive Plan for more information

***ROW widths are from the Kerrville Comprehensive Plan

****Pavement constructed in Industrial parks or areas zoned Industrial shall be built to the same standards as a Collector Road

Pavement Design Criteria for Portland Cement Concrete Roads:

Road Classification	*Subgrade Depth of Compaction	**Base Course Depth Flexible Base	Surface Course Depth of Concrete	***Width (FT)	****ROW Width (FT)	Design Speed (mph)
Alley	6"	6"	6"	15	20	20
Access	6"	6"	6"	20	40	30
Residential	6"	6"	6"	30	50	30
*****Collector	6"	6"	8"	42	60	30
Alternative Collector	6"	6"	8"	36	60	30
Secondary Arterial	6"	6"	10"	48	86	45
Principal Arterial	6"	6"	10"	2 - 24' lanes with 12' raised median	100	45

*Subgrade shall be compacted to 95-100% of Standard Proctor (ASTM D-698) to a depth of 6 inches, Subgrades with "Moisture Sensitive" material shall be treated with one of the four options outlined in Section 212

**Flexible Base compacted to 100% of Standard Proctor (ASTM D-698)

*** Pavement width is measured from back of curb to back of curb, see Kerrville Comprehensive Plan for more information

****ROW widths are from the Kerrville Comprehensive Plan

*****Pavement constructed in Industrial parks or areas zoned Industrial shall be built to the same standards as a Collector Road

211.02 Sidewalks: Sidewalks along Arterial/Parkway/Collector Streets shall be shown on the construction plans as a public improvement and constructed when the street is built. Construction of sidewalks along Minor Residential / Marginal Access /Access streets can be delayed until the lot is developed if so desired.

Sidewalk Widths shall :

Arterial/Parkway Streets	5 feet min abutting curb
Collector Streets	5 feet min abutting curb
Minor Residential Streets	4 feet min abutting curb
Marginal Access Streets	4 feet min abutting curb
Access Streets	4 feet min abutting curb

211.03 American Disability Act: All new construction and reconstruction of streets shall conform to the Texas Department of Licensing & Regulations (TDLR) standards. If the overall project cost exceed the limit specified by TDLR then the construction plans must be submitted for approval to TDLR. A sealed copy of the letter shall be provided to the City Of Kerrville before the Letter to Proceed will be granted.

211.04 Retaining Walls – When the design engineer cannot maintain stable embankments at the edge of the right of way due to steep drop-offs or inclines then a retaining wall may be warranted. Retaining walls taller than 4 feet in height must be designed by a professional engineer. The retaining wall, where it is located in the city ROW, will become property of the city and maintained by the city. Where a retaining wall is located on private property it shall be the property owner's responsibility to maintain or the homeowner association's responsibility and it shall be dually noted on the subdivision plat.

211.05 Metal Beam Guard Fence – The combination of embankment height and side slope rate may warrant barrier protection as shown in the figure below. For low fill heights a more abrupt slope rate is tolerable than at high fill heights. Since 4:1 and steeper side slopes provide little opportunity for drivers to redirect vehicles at high speeds, in the absence of guard fence an area free of obstructions should be provided by the designer beyond the toe of slope.

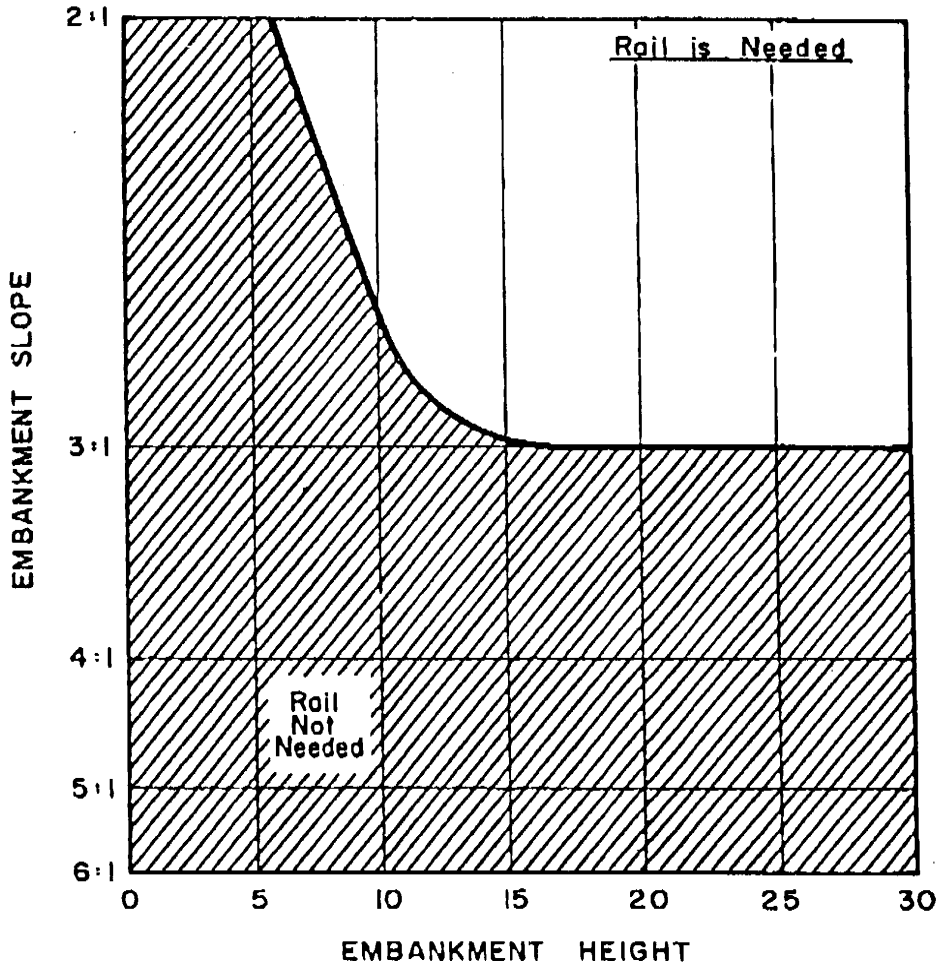

GUIDE FOR USE OF GUARD FENCE FOR EMBANKMENT HEIGHTS AND SLOPES

212 Subgrades With Moisture Sensitive Material:

Moisture Sensitive material is defined as material with PI of 20 or greater (as determined by ASTM D-4318) and 35% or more passing the #200 sieve (as determined by ASTM D-1140). Subgrades with Moisture Sensitive material shall be treated with the following options:

1. Replace 18" of subgrade with approved native material with PI less than 15 and more than 4 **or**
2. Lime Stabilize 6" of subgrade according to City of Kerrville Standard Specifications **or**
3. Increase the thickness of the design flexible base (concrete pavement only) to 10.5" **or**
4. Use Portland Cement to Stabilize the Subgrade according to City of Kerrville Standard Specifications.

213 Alignment

213.01 Allowable Grades and Where Concrete Must be Used:

A. The maximum grade by Subdivision Ordinance is outlined below. The design of steep grades is based on the types of vehicles that will negotiate the street.

1. Residential: maximum grade is 15%
2. Collectors: maximum grade is 10%
3. Thoroughfares: maximum grade is 10%

B. Minimum grades are governed by drainage conditions. With curbed pavements, longitudinal grade criteria should be provided to facilitate surface drainage. When grades are 0.49% or under, concrete streets must be placed. The minimum allowable grade (concrete pavement only) is 0.35%.

C. Portland Cement Concrete pavement shall be used on all classes of streets when the combination of the grade of the street exceeds 10% and is within 60 feet of an intersection.

213.02 Vertical Curves: Vertical curves should be simple in application and should result in a design that is safe, comfortable in operation, pleasing in appearance, adequate for drainage, and provide for minimum stopping site distance.

The design criteria for vertical curves shall be the American Association of State Highway and Transportation Officials in the latest edition of *A Policy on Geometric Design of Highways and Streets*.

213.03 Horizontal Curves: There are four types of horizontal curves: simple, compound, reversed, and spiral. The recommended design criteria for horizontal curves shall be based on information provided by the American Association of State Highway and Transportation Officials in the latest edition of *A Policy on Geometric Design of Highways and Streets*.

213.04 Sight Distance: Intersections should be planned to allow an adequate amount of sight distance for the automobile to be able to come to a smooth stop. Stopping sight distance on all approaches should be determined. The stopping sight distance (SSD) is given as:

$$\text{SSD (ft)} = 1.47ut + u^2/30(f \pm g)$$

where S = is stopping sight distance in feet
u = Design velocity in mph
t = Perception reaction time, (2.5 seconds)
f = Coefficient of friction, Reference (*A Policy for Geometric Design of*

Highways and Streets, AASHTO, 1984.
g = percent of grade divided by 100 (+ for upgrade, - for downgrade)

213.05 Visibility Triangles: The intersections of all streets and alleys with streets or other alleys shall have adequate visibility triangles dedicated as Right of Way to the City as noted below.

Alley intersects Residential Street	10' x 10'
Residential intersects Residential	10' x 50'
Residential intersects Collector	10' x 100'
Residential intersects Arterial	10' x (10' multiplied by speed of Arterial)

Example: For a residential street intersecting an arterial with a speed limit of 45 mph, the visibility triangle dedicated as Right of Way would be 10' x 450' (10' multiplied by 45).

213.06 Intersection Curb Radii: The following radius distances shall be used in the design and construction of all streets and alleys:

Alley with Alley	15'
Alley with Residential	15'
Residential with Residential	20'
Residential with Collector	30'
Collector with Collector	30'
Collector with Arterial	30'
Arterial with Arterial	50'

220 Roadway Excavation and Subgrade Preparation

221 General

221.01 Description: This section shall consist of the required clearing and grubbing of all areas to be excavated or receive embankment; all required excavation within the limits of the project (except as otherwise classified); cleaning out and shaping ditches as indicated; the removal and proper utilization or disposal of all excavated materials; the construction, compaction, shaping and finishing all earthwork within the limits of the project, all in conformity with required lines, grades and typical cross-section and in accordance with these specifications.

221.02 Testing and Soil Sample Locations: The existing natural grade shall be excavated to the correct line and grade and then tested to determine the soil classification, Plasticity Index (PI) per ASTM D-4318, percent passing #200 sieve (ASTM D-1140), optimum moisture content and optimum density per ASTM D-698 for areas of fill less than ten feet or ASTM D-1557 for areas of fill ten feet or more. Soil samples shall be taken from each location where there is an obvious change in soil classification and at the direction of the city engineer or his designated representative (city construction inspector).

222 Construction Work

222.01 Clearing and Grubbing: Clearing and grubbing shall consist of removal of all trees, brush, logs, down timber, fence posts, wire and other debris of all kinds from the sites of the street and utility work. All stumps and other objectionable matter, all roots and other projections shall be removed to a depth of one foot below the subgrade elevation if located in cut area, and one foot below the natural ground surface in other areas. Disposal of all refuse obtained from clearing operations shall be in a manner approved by the City Engineer, and shall conform to State Laws and local ordinances.

222.02 Excavation: Excavation shall be performed at the locations required to bring the subgrade of the areas to be paved to established alignment, grade and cross section. All suitable excavated materials shall be utilized insofar as practicable in constructing the required sections and shall be

spread as directed in such manner as to present a neatly finished appearance, and not obstruct the drainage or cause injury to any street improvements or to abutting property. Unsuitable excavation and excavation in excess of that needed for construction shall be known as Waste and shall become the property of the Contractor to be disposed of by him outside the limits of the right of way at a location approved by the Engineer.

222.03 Embankment: Prior to placing any embankment, all clearing and grubbing operations shall have been completed on the areas over which the embankment is to be placed. Stump holes or other small excavations or depressions within the limits of the embankment shall be backfilled with suitable material to the original slope by blading or other methods, indicated on plans or required by the Engineer. Suitable material will not be 'Moisture Sensitive' as defined in Section 212. The ground surface thus prepared shall be compacted by sprinkling and rolling as described below in 222.04 Compaction.

A. All fill material shall be placed in uniform layers of not more than eight (8) inches in depth (loose material) for compaction by sheepsfoot rolling or six (6) inches pneumatic tire, flat wheel, or vibratory steel wheel rolling for the full width of the cross section. Each loose layer shall be compacted as described below in 222.04 Compaction. The method of compaction shall be such that a uniform density will be obtained over the entire area and the depth of materials being compacted. All fill material deposited in place by means of dump trucks, draglines, or other similar equipment shall be thoroughly broken up so as to be free from lumps, large stones and clods before being spread into uniform layers. Each layer shall be graded so as to conform to finish grade of street section.

B. Embankment placed adjacent to, over and under pipes shall be suitable material and shall be placed in successive layers approximately horizontal or parallel with the finished grade. For areas of embankment adjacent to curbs, walks, etc. where it is impractical to employ the compaction methods above specified, the embankment shall be placed in layers not exceeding two (2) inches in depth of loose material, thoroughly mixed and wetted (or dried) uniformly to the approved methods, such as mechanical hand tampers, maintaining the required moisture content by additional sprinkling if necessary, until each layer has been uniformly compacted to the satisfaction of the Engineer.

222.04 Compaction & Moisture Content : All materials to receive compaction in fill areas less than 10 feet vertically shall be thoroughly mixed and wetted (or dried) as may be required to produce the optimum moisture of that material as determined by the moisture-density relationship in accordance with the Standard Proctor ASTM D-698 (materials receiving compaction in fill areas 10 feet or more vertically shall use the Modified Proctor ASTM D-1557). For 'Moisture Sensitive' material the moisture content shall be within 3% (+ or -) of the optimum otherwise it shall require rework. It shall then be rolled with an approved sheepsfoot producing a minimum compression of 150 pounds per square inch of cross sectional area on each tamping foot until a uniform compaction of at least 95% of Standard Proctor density is obtained (Modified Proctor for 10 feet or more of fill). Proof rolling may be substituted for density testing when approved by Engineer.

222.05 Proof Rolling: This item shall govern furnishing and operating heavy pneumatic tired compaction equipment for locating unstable areas of embankment, subgrade and flexible base courses.

This specification is applicable for projects or work involving either inch-pound or SI units. Within the text, the inch-pound units are given preference followed by SI units shown within parentheses.

Submittals

The submittal requirements of this specification item may include:

A. A plan describing the condition of each roller proposed for the work, as well as the type of

traction (self propelled or drawn), Type of roller, size, weight, tire pressure (if appropriate) and configuration of each individual roller, and

B. The operating speed proposed for each individual roller.

Equipment

A. Standard Proof Roller:

The proof rolling equipment shall have a loading platform or body suitable for ballast loading that is supported on a minimum of two (2) axles with not more than two (2) pneumatic tired wheels per axle. All wheels shall be arranged so that they will carry approximately equal loads when operating on uneven surfaces. Pneumatic proof rolling equipment with multiple pivotal axles and more than two tires along the front or rear axle axis shall have articulating axle supports to equally distribute the load to all tires over uneven surfaces.

The proof roller unit, under working conditions, shall have a minimum contact width of 7-1/2 feet (2.3 meters) and shall be so designed that the gross roller weight may be varied uniformly from 25 tons to 50 tons (23 megagrams to 45 megagrams) by ballast loading. The tires shall be capable of operating under various loads with variable air pressures up to 145 psi (up to 1000 kiloPascals). The tires shall be smooth tread and shall impart a minimum ground contact pressure of 75 pounds per square inch (520 kiloPascals). Tires shall be practically full of liquid (i.e. when liquid will flow from the valve stem of a fully inflated tire with the stem in the uppermost position). The operating load and tire pressure shall be within the range of the manufacture's chart as directed by the Engineer or designated representative.

The proof roller shall be drawn by a power train of adequate tractive effort or may be of a self-propelled type. The proof rolling equipment shall be equipped with a reverse mode transmission or be capable of turning 180 degrees in the street width. When a separate power train is used to draw the proof roller, the power train weight shall not be considered in the weight of the proof roller. The power train shall be rubber-tired when rolling subgrade and base materials. A cleated or track-type power train may be used on earth and rock embankments.

B. Alternate Equipment:

With the written approval of the Engineer or designated representative, the Contractor may utilize alternate equipment on embankment courses, subgrade and base courses subject to the requirements of the standard proof roller except with respect to minimum contact width, axle/tire arrangement and tire tread.

Alternate equipment for stability testing of embankments shall be restricted to equipment that can be shown to impart a stress distribution on the embankment structure equivalent to or greater than the stress induced by the concentrated weight of a standard proof roller.

C. Equipment Submittals:

All standard proof rollers and proposed alternate equipment must be approved by the Engineer or designated representative prior to their use. The Contractor shall furnish the Engineer or designated representative with charts or tabulations showing the contact areas and contact pressures for the full range of tire inflation pressures and for the full range of loadings for the particular tires furnished.

Alternate equipment submittals for proof rolling of embankments shall be signed and sealed by a registered Professional Engineer licensed in the State of Texas.

Construction Methods

A. General:

Within the ranges set forth in Equipment (A) above, the load and tire inflation pressures shall be adjusted as directed by the Engineer or designated representative. It is proposed to use a contact pressure corresponding as nearly as practical to the maximum supporting value of the earthwork or base. The entirety of prepared surfaces to be tested by this method shall be proof rolled by a minimum of two passes or the proof roller tires. Each succeeding trip of the proof roller shall be offset by not greater than one tire width.

When alternate equipment is proposed and only one axle meets minimum requirements, only the qualifying axle shall be used to proof roll. If the operation of the proof roller shows an area to be unstable, the substandard area shall be brought to satisfactory stability and uniformity by additional curing, compaction, or by removal and replacement of unsuitable materials. The re-worked area shall then be proof rolled.

Proof rollers shall be operated at speeds between 2 and 6 miles per hour (3 and 10 kilometers per hour) or as directed by the Engineer or designated representative.

Acceptable limits of elastic and plastic deformation of prepared subgrade courses shall be established by proof rolling Test Sections of representative soil conditions, previously tested and approved for density and moisture requirements of the governing subgrade and earth embankment items. Proof rolling of first course base over a plastic subgrade may be waived by the Engineer or designated representative if it is determined that the prepared first course base will be damaged by the proof roller.

B. Roadway Construction:

The subgrade and all lifts of base material shall be proof rolled in new roadway construction and in the reconstruction of existing streets. Proof rolling of the curb course base shall be substituted for proof rolling of final course base at the direction of the Engineer or designated representative. Proof rolling may be waived by the Engineer or designated representative where construction is limited to turn lanes, street widening less than 7-1/2 feet (2.3 meters) in width, or where the site is otherwise congested.

C. Trenches:

Trenches shall be proof rolled where no limitations to the operation of the proof roller exist as may be determined by the Engineer subject to the provisions hereunder.

All trenches shall be proof rolled in new roadways or in existing roadways under reconstruction. Trenches shall be proof rolled at the street subgrade elevation by longitudinal and perpendicular passes of the roller as may be dictated by the width of the trench.

Proof rolling of trenches in existing paved streets shall be limited to pavement cross-sections capable of sustaining the weight of the proof rolling equipment without imparting damage to the remaining pavement structure as determined by the Engineer. Trenches less than 4 feet (1.2 meters) in width shall be exempted of all proof rolling requirements. Only the final course base shall be proof rolled in trenches 4 feet (1.2 meters) or wider but narrower than the proof roller contact width. The subgrade, the first course and the final course base shall be proof rolled in trenches 7-1/2 feet (2.3 meters) or wider.

D. Embankment Construction:

All embankment courses shall be proof rolled, unless otherwise directed by the Engineer or designated representative.

If required by the Engineer or designated representative, stability testing of embankments constructed to the finished cross-section and elevation or to interim elevations shall either be conducted with a standard proof roller or alternate equipment, which can be proven to impart a horizontal and vertical pressure distributions equivalent to or greater than those induced by a standard proof roller.

Measurement and Payment

No direct payment will be made for the materials, equipment or labor required by this item, but shall be considered subsidiary to the various items included in the contract.

223 Testing

223.01 Minimum Requirements: The Contractor shall provide independent soils laboratory testing to determine the plasticity index (ASTM D-4318), the percent of material passing #200 sieve (ASTM D-1140), and density curve for the subgrade material (ASTM D-698), field density testing of the completed subgrade shall be 95%-100% of the standard proctor for fill less than 10 feet and 95%-100% modified proctor for fill 10 feet or greater. The subgrade shall be tested at minimum intervals of one per 8"lift per 100 lineal feet of proposed pavement or as shown on the construction plans. All testing must be done in the presence of a city construction inspector, the inspector has the authority to pick locations for all tests. Proof rolling may be substituted for density testing when approved by Engineer. A copy of all tests shall be submitted to the City Engineer.

224 Payment

224.01 Measurement and Payment: The work performed under this section shall be paid for at the unit bid price for Excavation and Subgrade Preparation measured by the square yard of work completed, which payment shall be full compensation for excavation, embankment, rolling, PI testing, material passing #200 sieve, sprinkling and compacting to 95%-100% Standard or Modified Proctor Density by soils laboratory testing (or proof rolling), including furnishing and operating all equipment and all labor, tools and incidentals necessary to satisfactorily perform the work.

230 Stabilized Subgrade

231 Lime Stabilized Subgrade

231.01 General: This section shall consist of the requirements for hydrated lime, quicklime and commercial lime slurry; the treating of subgrade; pulverizing, adding lime, mixing, and compacting the treated material in accordance with these specifications.

Lime shall be applied as provided for in the specifications, as a dry material or as a mixture of lime solids and water in the form of lime slurry.

For dry application, Type A, Hydrated Lime or Type C, Quicklime or Grade DS may be used where specifications permit.

For wet application, lime slurry may be delivered to the jobsite as Type B, Commercial Lime Slurry or a lime slurry may be prepared at the job site or other location approved by the Engineer, by using Type A, Hydrated Lime or Type C, Quicklime as specified.

231.02 Types: The various types and grades are defined and identified as follows:

1. Type A, Hydrated Lime, a dry powdered material consisting essentially of calcium hydroxide.
2. Type B, Commercial Lime Slurry, a liquid mixture of essentially hydrated lime

solids and water in slurry form.

3. Type C, Quicklime, a dry material consisting essentially of calcium oxide. It shall be furnished in either of two grades that differ in sizing.
4. Grade DS, "pebble" quicklime of a gradation suitable for either dry placement or for use in a slurry.
5. Grade S, finely-graded quicklime for use in a slurry. The use of this type is unsuitable for dry placement.

231.03 Preparation: Prior to treating existing material, it shall be shaped to conform to the typical sections, as shown on the plans. When the Contractor elects to use a cutting and pulverizing machine that will process the material to the plan depth, the Contractor will not be required to excavate to the secondary grade or windrow the material. In lieu of using the cutting and pulverizing machine, the Contractor shall excavate and windrow the material to expose the secondary grade to the typical sections as shown on the plans.

231.04 Placing: The percentage by weight or pounds per square yards of lime to be added will be as shown on the plans. Lime shall be spread only on that area where the mixing operations can be completed during the same working day. The lime operation shall not be started when the air temperature is below 40 F and falling, but may be started when the air temperature is above 35 F and rising. Lime shall not be placed when weather conditions in the opinion of the Engineer are unsuitable.

During the interval between application and mixing, hydrated lime that has been exposed to the open air for a period of six hours or more or to excessive loss due to washing or blowing will not be accepted.

231.05 Mixing: The material and lime shall be thoroughly mixed and brought to the proper moisture content. It may be left to cure, or "rot" one to four days. In addition to the above, when Type C Quicklime, Grade DS is used, the material and lime shall be mixed as thoroughly as possible at the time of the lime application. Sufficient moisture shall be added during the mixing to hydrate the quicklime. After mixing, and prior to compaction, the mixture shall be moist cured for two to seven days. After curing, mixing shall continue until the pulverization requirements are met.

231.06 Pulverization: Following mixing, a sample of the material at roadway moisture shall be obtained for pulverization testing. All nonslaking aggregates retained on the 3/4-inch sieve will be removed from the sample. The remainder of the material shall meet the following pulverization requirement:

	Percent
Minimum passing 1-3/4" sieve----------	100
Minimum passing 3/4" sieve----------	85

231.07 Compaction: Compaction of the mixture shall begin immediately after the pulverization requirement is met. Throughout this entire operation, the shape of the course shall be maintained by blading, and the surface upon completion shall be smooth and in conformity with the typical sections as shown on the plans. The completed section shall then be finished by rolling with a pneumatic tire or other suitable roller. The completed section shall be moist cured or prevented from drying by addition of an asphalt material at the rate of 0.05 to .20 gallons per square yard.

When a section is reworked more than 72 hours after completion of compaction, the Contractor shall add 25 percent of the specified rate of lime. Reworking shall include loosening, mixing, compacting, and finishing. When a section is reworked, a new optimum density will be required.

231.08 Testing Requirements: The contractor shall provide independent soils laboratory testing to determine the density curve of the lime treated subgrade, and field testing of the completed subgrade to

determine the density and thickness. The completed section shall be compacted to the extent necessary to provide not less than 95 percent of optimum density. Density and Thickness testing will be required at the rate of one test per 1200 lineal feet per travelway, or fraction thereof.

When the material fails to meet the required density, or should the material lose the required stability, density or finish before the next course is placed, it shall be reworked.

231.09 Measurement and Payment: Lime Stabilized Subgrade of the depth specified will be paid for at the unit price bid per square yard. This price shall be full compensation for shaping existing material, loosening, mixing, pulverizing, spreading, drying, applying lime, water content of the slurry, compacting, curing including curing materials, shaping and maintaining, processing, hauling, reworking if required, sampling and testing, and for all mix water, tools, equipment, labor and incidentals necessary to complete the work.

232 Cement Stabilized Subgrade

232.01 General: This item shall consist of the requirements for Portland cement; the treating of subgrade by the addition of Portland cement; road mixing and compacting the treated material in accordance with these specifications.

New flexible base shall conform to the material requirements of Section 240, "Flexible Base" and shall be of the type and grade as shown on the plans. Type I and Type II Portland cement shall conform to the requirements of ASTM C150. Different brands or different types of cement, or the same brand or type from different mills shall not be mixed n storage. Bags of cement shall contain 94 pounds net and a barrel shall be considered as containing 376 pounds net.

232.02 Preparation: The completed course shall be uniformly treated, free from loose or segregated areas, of uniform density and moisture content, well bound for its full depth and shall have a smooth surface.

Prior to scarifying or pulverizing existing material, the subgrade shall be shaped to conform to the typical sections as shown on the plans. The Contractor shall proof roll the roadbed before pulverizing or scarifying existing material. Soft spots shall be corrected.

When the Contractor elects to use a cutting and pulverizing machine that will process the material to the plan depth, the Contractor will not be required to excavate to the secondary grade and windrow the material. In lieu of using the cutting and pulverizing machine, the Contractor shall excavate and windrow the material to expose the secondary grade. The windrowed material shall be uniformly replaced before cement is applied.

232.03 Placing: The percent of cement to be added will be as shown on plans. Cement shall be spread only in that area where the mixing, compacting, and finishing operations can be completed the same working day. The cement treatment operation shall not be started when the air temperature is below 40°F and falling, but may be placed when the air temperature is above 35°F and rising. Cement shall not be placed when the weather conditions in the opinion of the Engineer are unsuitable.

232.04 Mixing: The cement shall be dry mixed with the material prior to the addition of water. Immediately after dry mixing, water shall be uniformly applied. After mixing, the mixture shall be in a loose, evenly spread state ready for compaction. The mixture shall be mixed and compacted in one lift. The percentage of moisture in the mixture shall be within +/- two percentage points of optimum as determined by Test Method Tex-120-E, Part II.

232.05 Compaction: Compaction shall be completed within two hours of the addition of water to the dry mixed material. Immediately after compaction, the surface shall be clipped, skinned, or tight bladed by a maintainer or subgrade trimmer to a depth of approximately 1/4", removing all loosened

material. The surface shall then be rolled with a pneumatic tire roller, adding small increments of moisture as needed during rolling.

232.06 Curing: The completed section shall be moist cured for three days or prevented from drying by addition of an asphalt material at the rate of 0.05 to 0.20 gallon per square yard.

232.07 Minimum Requirements: The Contractor shall provide independent soils laboratory testing to determine the density curve of the cement treated subgrade, and field testing of the completed subgrade to determine the density and thickness. The course shall be sprinkled and compacted to the extent necessary to provide not less than 95 percent of optimum density. Density and Thickness testing will be required at the rate of one test per 100 lineal feet per travelway, or fraction thereof.

When the material fails to meet the density requirements or should the material lose the required stability, density, or finish before the next course is placed, the treated material shall be removed and replaced. Removal and replacement with acceptable treated material will be at the Contractor's expense.

232.08 Measurement and Payment: Cement Stabilized Subgrade of the depth specified will be paid for at the unit price bid per square yard. This price shall be full compensation for shaping existing material, loosening, pulverizing, providing, cement, spreading, road mixing, compacting, blading, shaping, finishing, curing including curing materials, replacing if required, sampling and testing, and for all mixing water, labor, tools and incidentals necessary to complete the work.

240 Flexible Base

241 General

241.01 Description: This section shall consist of a foundation course for Pavement surface courses and concrete curb & gutter and shall be constructed as herein specified in one or more courses in conformity with the typical sections and to the lines and grades as established by the Engineer.

241.02 Requirements: A base course of crushed rock flexible base, consisting of durable particles of stone mixed with approved binder material shall be installed on the finished subgrade. The material for this course shall be from a source approved by the City Engineer and shall be placed and compacted in two or more courses to obtain a minimum of 100% of the standard proctor density.

242 Material

242.01 General Requirements: The materials shall consist of crushed limestone mixed with an approved binding material compacted to not less than one hundred (100%) per cent standard proctor compaction ratio. Crushed gravel or uncrushed gravel will not be acceptable. The Contractor shall provide at his own expense, test results for the material determined by an acceptable independent soils testing laboratory. A test report containing soil constants, gradation and wet ball mill of the base material shall be made available prior to the compaction operations.

After compaction and adequate curing of base material, density tests shall be made by an acceptable independent soils testing laboratory at the expense of the Contractor.

242.02 Gradation:

A. Crushed Limestone: When properly slaked and tested to TxDOT Flexible Base Requirements Item 247 Type A Grade 1 or Grade 2 will be accepted. the flexible base material shall meet the following requirements:

Physical Requirements

Grade 1		Grade 2	
Triaxial Class 1: Minimum Compressive Strength: 45 psi at 0 psi lateral pressure and 175 psi at 15 psi lateral pressure.		Triaxial Class 1: Minimum Compressive Strength: 35 psi at 0 psi lateral pressure and 175 psi at 15 psi lateral pressure.	
Master Grading		Master Grading	
1 3/4”	0	2 1/2”	0
7/8”	10-35	1 3/4”	0-10
3/8”	30-50	No.# 4	45-75
No.# 4	45-65	No.# 40	60-85
No.# 40	70-85		
Max. L.L.	35	Max. L.L.	40
Max. P.I.	10	Max. P.I.	12
Wet Ball Mill	Max. 40	Wet Ball Mill	Max. 45
Max. Increase in Passing No.# 40	20	Max. Increase in Passing No.# 40	20

Testing of flexible base materials shall be in accordance with the following TxDOT standard laboratory test procedures:

Moisture Content	Tex-103-E
Liquid Limit	Tex-104-E
Plasticity Index	Tex-106-E
Sieve Analysis	Tex-110-E
Moisture-Density Determination	Tex-113-E
Wet Ball Mill	Tex-116-E
Triaxial Tests	Tex-117-E

Tolerances unless otherwise shown on the plans, the limits established reasonable close conformity with the specified gradation and plasticity index are defined by the following:

Gradation. The City Engineer may accept the material, providing not more than one (1) out of the most recent (5) consecutive gradation tests performed are outside the specified limits for master grading, as applicable, on any individual sieve by no more than five (5) percentage points.

Plasticity Index. The City Engineer may accept the material providing not more than one (1) out of the most recent five (5) consecutive plasticity index samples tested are outside the specified limit by no more than two (2) percentage points.

Material. The material shall be rejected upon visual inspection should it contain an excessive amount of clay balls or roots.

243 Construction Methods

243.01 Preparation of the Subgrade: The subgrade shall be excavated or filled in conformity with the typical sections, to the line and grade established by the Engineer, thoroughly mixed, wetted or dried, and compacted in accordance with Section 220, "Roadway Excavation and Subgrade Preparation" of these specifications. All unstable or otherwise objectionable material shall be removed from the subgrade and replaced with approved materials and all holes, ruts and depressions shall be filled with approved materials. The surface of the subgrade shall be finished to line and grade as established by the Engineer and in conformity with the plans. Any deviation in excess of one-half (1/2") inch in cross section and in length of sixteen (16') feet measured longitudinally shall be corrected by loosening, adding or removing material, or reshaping and compacting by sprinkling and rolling. Sufficient subgrade shall be prepared in advance to insure satisfactory prosecution of the work.

243.02 First Course: Immediately before placing the base material, the subgrade shall be approved for grade and compaction. Material deposited upon the subgrade shall be spread and shaped the same day. In the event inclement weather or unforeseen circumstances render impracticable the spreading of the material during the first twenty-four (24) hour period, the material shall be thoroughly mixed and spread as directed by the Engineer. No trenching of the flexible base will be allowed for the placement of curb. The curb shall be placed upon a completed section of base material as shown one the street cross section details. The material shall be sprinkled and bladed, dragged and shaped to conform to the typical section shown on the plans. All areas and "nests" of segregated coarse or fine material shall be corrected or removed and replaced with well-graded material. If additional binder is considered desirable or necessary after the material is spread and shaped, it shall be carefully and evenly incorporated with the material in place by scarifying, brooming or by other approved methods. The course shall then be thoroughly mixed and sprinkled as may be required to produce the optimum moisture of that material as determined by moisture-density relationships in accordance with ASTM D-698. It shall then be rolled with an approved roller in accordance with Section 244, "Equipment" of the specifications, until a uniform compaction of at least 100% standard proctor density is obtained. When using a sheepsfoot roller, flat wheel roller, or vibratory steel roller, the deposited material shall not exceed 6" loose measurement in thickness. When using a pneumatic tire roller, deposited material shall not exceed 4" loose measurement in thickness. Throughout this entire operation, the shape of the course shall be maintained by blading, and the surface upon completion shall be smooth and in conformity with the typical section shown on the plans and to the established lines and grades. In the area on which pavement is to be placed, any deviation in excess on one-fourth (1/4") inch in cross section and in length of sixteen (16') feet measured longitudinally shall be corrected by loosening, adding or removing material, reshaping and recompacting by sprinkling and rolling. All irregularities, depressions, or weak spots which develop shall be immediately corrected by scarifying the areas affected, adding suitable material as required, reshaping and recompacting by sprinkling and rolling.

243.03 Succeeding Courses: Construction methods shall be the same as prescribed for the first course. The final course shall be four (4") inches in depth.

244 Equipment

244.01 Tamping Roller: Tamping (Sheepsfoot) rollers shall be a self-propelled roller capable of operating in a forward or backward motion. It shall have one or more tamping drums with an effective rolling width of not less than sixty (60) inches. Tamping drums shall be self-cleaning. Tamping feet shall project not less than three (3) inches from the surface of the drum. The load tamping foot shall exert a pressure of not less than 125 pounds per square inch nor more than 550 pounds per square inch in a static mode. Compaction in a vibratory mode will be permitted.

244.02 Pneumatic Tire Rollers: Pneumatic tire rollers shall consist of not less than seven (7) pneumatic wheels, running on axles in such manner that the rear group of tires will not follow in the tracks of the front group. The pneumatic tire roller shall have an effective rolling width of approximately 84 inches and shall be equipped with tires that will afford ground contact pressures to 80 pounds per square inch or more.

244.03 Vibratory Steel Rollers: Vibratory steel rollers shall be self propelled with at least one drum equipped to vibrate and be equipped with separate frequency and amplitude control for each vibrating drum. Vibratory steel rollers shall have the capability of starting and stopping the vibration manually and to continuously clean the face of the drum. The vibratory drum shall not be less than 20 inches wide.

244.04 Flat Wheel Steel Rollers: Flat wheel steel rollers shall be of the three-wheel, self-propelled type, weighing not less than ten (10) tons and shall provide a compression on the rear wheels of not less than 325 pounds per linear inch of tire width. All wheels shall be flat, the rear wheels shall have a diameter of not less than forty-eight (48) inches, and each shall have a tire width of not less than twenty (20) inches.

244.05 Alternate Equipment: In lieu of the equipment specified, the Contractor may, upon written permission from the Engineer, operate other compacting equipment that will produce equivalent relative compaction. If the substituted equipment fails to produce the desired compaction, its use shall be discontinued and the Contractor will be required to furnish the specified equipment.

245 Testing

245.01 Minimum Requirements: The Contractor shall provide independent soils laboratory testing to determine the density curve of the flexible base material, and field testing of the completed flexible base to determine the completed density which shall be 100 % standard proctor or greater. There shall be at least one test every 100 lineal feet, per travelway, for each course of base applied. The thickness of the completed course shall be tested at least once every 500 lineal feet, per travelway.

246 Payment

246.01 Measurement and Payment: The work performed and materials furnished as prescribed by this item shall be measured by the square yard of satisfactorily completed flexible base at the unit bid price for "Flexible Base", which payment shall be full compensation for securing and furnishing all materials and freight involved; for spreading, mixing, blading, dragging, sprinkling, rolling and finishing; for all required testing; for all manipulation, labor, superintendence, tools, equipment, and incidentals necessary to satisfactorily complete the work.

250 Hot-Mix Asphaltic Concrete Pavement Base and Surface Courses

251 General

251.01 Description: This item shall consist of a base course and a surface course as shown on plans, composed of a compacted mixture of mineral aggregate and asphaltic material, mixed, transported, and placed on an approved tack coat.

251.02 Requirements: The base course shall consist of Type B Asphaltic Concrete (hot mix) meeting item 292 specifications of the Texas Department of Transportation's *Standard Specifications for Construction and Maintenance of Highways, Streets and Bridges* 2004. A final asphaltic surface course shall consist of a minimum of two (2") inches (after compaction), of Type D Asphaltic Concrete (hot mix), meeting City specifications for material and installation. The pavement surface shall have a parabolic crown of five (5") inches, measured from the gutter elevation to the centerline of the paved section.

252 Prime Coat

252.01 Asphalt Materials: The asphalt materials for prime coat shall conform to Cutback Asphalt MC-30, Emulsion MS-2, SS-1 or AE-P.

252.02 Water: Water shall be furnished by the Contractor and shall be clean and free from industrial wastes and other objectionable matter.

252.03 Dispersal Agent: Detergent shall be added to water and sprayed on surfaces to be primed in accordance to asphalt manufacturer's recommendations.

252.04 Construction Methods: When, in the opinion of the Engineer, the base course or other surface is satisfactory to receive the prime coat, the surface shall be cleaned by sweeping or other approved methods as directed by the Engineer. The surface shall be lightly sprinkled with water just prior to application of the asphaltic material unless the Engineer waives this requirement. The Contractor shall submit a list of prime materials to be applied to the Engineer for approval. When emulsions are approved, a dispersal agent shall be added to the water before sprinkling. The asphaltic material shall be applied on the clean surface by an approved type of self-propelled pressure distributor operated so as to distribute the prime coat at a rate ranging from .1 to .3 gallons per square yard of surface area. The distributor, when used for pay purposes, shall have been calibrated within three (3) years from the date it is first used on the project. The material shall be evenly and smoothly distributed. During the application of prime coat, care shall be taken to prevent splattering of adjacent pavement, curb and gutters, or structures. The Contractor shall be responsible for cleaning splattered areas.

Prime Coat shall not be applied when the air temperature is below 60°F and falling, but it may be applied when the air temperature is above 50°F and rising. Asphaltic material shall not be placed when general weather conditions, in the opinion of the City Engineer, are not suitable.

The Contractor shall be responsible for the maintenance of the surface until the work is accepted by the City Engineer. No traffic, hauling or placement of any subsequent courses shall be permitted over the freshly applied prime coat.

253 Tack Coat

253.01 Description: This item shall consist of an application of asphaltic material on the completed base course after the prime coat has sufficiently cured, existing pavement, bituminous surface, bridge deck, or on a prepared surface as directed by the Engineer.

253.02 Asphalt Materials: The asphalt material for "Tack Coat" shall meet the requirements for Cutback Asphalt or Emulsified Asphalt as listed below. Combining 50 to 70 percent by volume of the asphaltic material as specified for the type of paving mixture with 30 to 50 percent by volume of gasoline and/or kerosene shall make cutback asphalt. The type of mixture shall be selected from the following table:

Temp of Surface ^{o}F	
40 - 70	**Over 70**
RS-2	MS-2
RS-2H	MS-2H
RC-250	MC-70
CRS-2	CMS-2
CRS-2H	CMS-2H

253.03 Construction Methods: The surface upon which the tack coat is to be placed shall be cleaned thoroughly and the surface shall be given a uniform application of tack coat. The tack coat shall be applied with an approved sprayer at a rate not to exceed 0.05 gallon residual asphalt per square yard of surface. Where the mixture will adhere to the surface upon which it is to be placed without the use of a tack coat, the tack coat may be eliminated. All contact surfaces of curbs and structures and all joints shall be painted with a thin uniform application of tack coat. During the application of the tack coat,

care shall be taken to prevent splattering of adjacent pavement, curb and gutter and structures. The tack coat shall be rolled with a pneumatic tire roller when directed by the Engineer.

Tack coat shall not be applied when the air temperature is below 50°F and falling, but it may be applied when the air temperature is above 40°F and rising, the air temperature being taken in the shade and away from artificial heat. Asphaltic material shall not be placed when general weather conditions, in the opinion of the City Engineer, are not suitable.

The distributor shall have been recently calibrated. After beginning of the work, should the yield on the asphaltic material applied appear in error, the distributor shall be calibrated in a manner satisfactory to the Engineer before proceeding with the work.

The contractor shall be responsible for maintenance of the surface until the HMAC is placed over the tack coat or the City Engineer accepts the work. No traffic, hauling, or placement of any subsequent courses shall be permitted over the freshly applied tack coat unless it is blotted by the application of sand as directed by the Engineer.

All storage tanks, piping, retorts, booster tanks and distributors used in storing or handling asphaltic material shall be kept clean and in good operating condition at all times and they shall be operated in such a manner that there will be no contamination of the asphaltic material with foreign material. It shall be the responsibility of the Contractor to provide and maintain in good working order a recording thermometer at the storage heating unit at all times.

254 Hot-Mix Asphaltic Concrete Pavement Surface Course

254.01 Description: This item shall govern for the construction of a Type D surface course as shown on the plans, being composed of a compacted mixture of aggregate and asphalt cement mixed hot in a mixing plant, in accordance with the details shown on the plans and the requirements herein. Type C hot-mix may be substituted for Type D hot-mix when authorized by the Engineer.

254.02 Materials: Materials shall conform to Item 340, "Dense-Graded Hot-Mix Asphalt (Method)" of the Texas Department of Transportation's *Standard Specifications for Construction and Maintenance of Highways, Streets and Bridges* 2004.

254.03 Mixture Design: The Contractor shall furnish the City Engineer with a mix design for approval. To substantiate the design, trial mixtures shall be produced and tested using all of the proposed project materials and equipment prior to any placement. The City Engineer may waive trial mixtures if similar designs have proven satisfactory.

254.04 Density: The mixture shall be designed to produce an acceptable mixture at an optimum density of 96.0 percent, when tested in accordance with Test Method Tex-207-F and Test Method Tex –227-F. The operating range for control of laboratory density during production shall be optimum plus or minus 1.5 percent. If the laboratory density of the mixture produced has a value outside the range specified, the Contractor shall investigate the cause and take corrective action.

254.05 Stability: The materials used in the mixture design shall produce a mixture with a stability value of at least 35 when tested in accordance with Test Method Tex-208-F. If during production, the stability falls below the specified minimum, the Engineer and the Contractor shall closely evaluate other test result values for specification compliance such as gradation, asphalt content, moisture content, etc. to determine the cause and take corrective action.

254.06 Master Grading Limits:

Sieve	Type C	Type D
7/8”	100	
5/8”	95-100	
1/2”		100
3/8”	70-85	85-100
1/4”		
No.4	43-63	50-70
No.10	30-40	32-42
No.40	10-25	11-26
No.80	3-13	4-14
No.200	1-6*	1-6*
VMA(%min)	13	14

* 2- 8 when Test Method Tex-200-F, Part II (Washed Sieve Analysis) is used

254.07 Tolerances: The gradation of the aggregate and the asphalt cement content of the produced mixture shall not vary from the job-mix formula by more than the tolerances herein.

	Tolerance Percent by Weight Or Volume
Passing the 1-1/4” to No. 10 sieve	Plus or Minus 5
Passing the No. 40 to No. 200 sieve	Plus or Minus 3
Asphalt, weight	Plus or Minus 0.5
Asphalt, volume	Plus or Minus 1.2

254.08 Equipment:

A. General: All equipment for the handling of all materials, mixing, placing and compacting of the mixture shall be maintained in good repair and operating condition and subject to the approval of the Engineer. Any equipment found to be defective and potentially having a negative effect on the quality of the paving mixture or ride quality will not be allowed.

B. Mixing Plants: Mixing plants may be the weigh-batch type, the modified weigh-batch type, the drum-mix type, or the specialized recycling type. All plants shall be equipped with satisfactory conveyors, power units, mixing equipment, aggregate handling equipment, bin and dust collectors.

C. Screed Unit: The spreading and finishing machine shall be equipped with a heated compacting screed. Extensions added to the screed shall be provided with the same compacting action and heating capacity as the main screed unit. The spreading and finishing machine shall be equipped with an approved automatic dual longitudinal screed control system and automatic transverse screed control system. The longitudinal controls shall be capable of operating from any longitudinal grade reference including a stringline, ski, mobile stringline, or matching shoe. The Contractor shall furnish all equipment for grade reference. It shall be maintained in good operating condition by personnel trained in the use of this type of equipment.

D. Tractor Unit: The tractor unit shall be equipped with a hydraulic hitch sufficient in design and capacity to maintain contact between the rear wheels of the hauling equipment and the push rollers of the finishing machine while the mixture is being unloaded. No portion

of the weight of the hauling equipment shall be supported by the asphalt paver. No vibrations or other motions of the loading equipment shall be transmitted to the paver.

E. Material Transfer Equipment: Equipment to transfer mixture from the hauling units or the roadbed to the spreading and finishing machine will be allowed unless otherwise shown on the plans. Windrow pick-up equipment shall be constructed in such a manner that substantially all the mixture deposited on the roadbed is picked up and shall not be contaminated with foreign material. Material feeding systems shall be designed to provide a continuous flow of uniform mixture to the spreading and finishing machine.

F. Rollers:

1. Pneumatic Tire Roller: Pneumatic tire rollers shall consist of not less than seven (7) pneumatic wheels, running on axles in such a manner that the rear group of tires will not follow in the tracks of the front group. The pneumatic tire roller shall have an effective rolling width of approximately 84 inches and shall be equipped with tires that will afford ground contact pressures to 80 pounds per square inch or more. When used for kneading and sealing the surface only, they shall provide a minimum of 55 psi ground contact pressure.

2. Non-vibratory Steel Wheel Rollers: This roller shall be an acceptable self-propelled tandem roller weighing not less than 10 tons.

3. Vibratory Steel Wheel Roller: This roller shall have a minimum weight of 6 tons. The compactor shall be equipped with amplitude and frequency controls and shall be specifically designed to compact the material on which it is used.

G. Staightedges and Templates: When requested, the contractor shall provide an acceptable 10 foot straightedge for surface testing.

254.09 Construction Methods:

A. General: It shall be the responsibility of the Contractor to produce, transport, place and compact the specified paving mixture in accordance with the requirements herein.

The asphaltic mixture, shall not be placed when the air temperature is below 50°F and is falling, but it may be placed when the air temperature is above 40°F and is rising. Mat thicknesses of 1-1/2" or less shall not be placed when the temperature of the surface on which the mat is to be placed is below 50°F.

It is further provided that the asphaltic mixture shall be placed only when general weather conditions and temperature and moisture condition of the base, in the opinion of the Engineer, are suitable.

If after being discharged from the mixer and prior to placing, the temperature of the asphaltic mixture is 50°F or more below the selected discharge temperature, all or any part of the load may be rejected and payment will not be made for the rejected load.

B. Transporting: The asphaltic mixture shall be hauled to the work site in tight vehicles previously cleaned of all foreign material. In cool weather or for long hauls, covering and insulating of the truck bodies may be required.

C. Placing: The asphaltic mixture shall be dumped and spread on the approved prepared surface with the spreading and finishing machine. The placing of the asphaltic mixture shall be done without tearing, shoving, gouging or segregating the mixture and without producing streaks in the mat.

Unloading into the finishing machine shall be controlled so that bouncing or jarring of the spreading and finishing machine shall not occur and the required lines and grades shall be obtained without resorting to hand finishing.

Unless otherwise shown on the plans, dumping of the asphaltic mixture in a windrow and then placing the mixture in the finishing machine with windrow pick-up equipment will be permitted. Any operation of the windrow pick-up equipment resulting in the accumulation and subsequent shedding of accumulated material into the asphaltic mixture will not be permitted.

The spreading and finishing machine shall be operated at a uniform forward speed consistent with the plant production rate, hauling capability, and roller train capacity to result in a continuous operation.

Adjacent to flush curbs, gutters and structures, the surface shall be finished uniformly high so that when compacted it will be slightly above the edge of the curb or structure.

D. Compacting: The pavement shall be compacted thoroughly and uniformly with the necessary rollers to obtain the compaction and cross-section of the finished paving mixture meeting the requirements of the plans and specifications.

When rolling with steel wheeled rollers, rolling shall start by first rolling the joint with the adjacent pavement and then continue by rolling longitudinally at the sides and proceed toward the center of the pavement, overlapping on successive trips by at least one foot. Alternate trips of the roller shall be slightly different in length. On super-elevated curves, rolling shall begin at the low side and progress toward the high side.

Vibratory rollers shall not be left vibrating while not rolling or when changing directions. Vibratory rollers shall not be allowed in the vibrating mode on mats with a plan depth of less than 1-1/2 inches.

The motion of the rollers shall be slow enough to avoid other than usual displacement of the mixture. The roller shall not be allowed to stand on pavement which has not been fully compacted.

The edges of the pavement along curbs, headers and similar structures, and all places not accessible to the roller, shall be thoroughly compacted with lightly oiled tamps.

All rolling for compaction shall be completed before the mixture temperature drops below 175°F.

255 Testing

255.01 Minimum Requirements: No asphaltic concrete shall be placed without the presence of a certified lab technician. Testing for laboratory density, stability, percent asphalt, gradation, and moisture content will be required for each day's production. In place densities shall be taken at intervals of one every 500 lineal feet per travelway.

255.02 Ride Quality: All irregularities shall be corrected at the contractor's expense. Irregularities shall be any variation of the surface from the testing edge of the straightedge which exceeds 1/8" between any two contacts, longitudinally or vertically.

255.03 Final Acceptance: If the surface ravels, flushes, ruts or deteriorates in any manner prior to final acceptance of the work, it will be the Contractor's responsibility to correct this condition at his

expense, to the satisfaction of the Engineer and in conformance with the requirements of this specification.

256 Payment

256.01 Measurement and Payment The work performed and materials furnished, as prescribed by this item and measured by the ton of 2000 pounds of the composite "Asphaltic Concrete", will be paid for at the unit bid price for "Hot-Mix Asphaltic Surface" and "Hot-Mixed Asphalt Stabilized Base" of the type specified, which price shall each be full compensation for furnishing all materials and freight involved; for all heating, mixing, hauling, cleaning the existing base course; placement of a prime coat; placement of a tack coat; placing asphaltic concrete mixture; testing, rolling and finishing; and for all manipulations, labor, tools, equipment and incidentals necessary to satisfactorily complete the work.

260 Surface Treatments

261 General

261.01 Description: This item shall consist of a surface treatment composed of a single, double or triple application of asphalt material, each covered with aggregate for the sealing of existing pavements in accordance with these specifications.

261.02 Materials: The materials used under this specification shall meet the following requirements:

A. Asphaltic Material: Asphalt oil shall be AC-15-P or approved equal and shall meet the requirements of the Texas Department of Transportation's *Standard Specifications for Construction of Highways, Streets, and Bridges*, Item 300, "Asphalts, Oils, and Emulsions".

B. Aggregates: The aggregate shall be pre-coated grade 4 aggregate and the aggregate, placement, and storage methods shall conform to the Texas Department of Transportation's *Standard Specifications for Construction of Highways, Streets, and Bridges*, Item 302, "Aggregates for Surface Treatments".

C. Application Rates: The application rate for the surface treatment shall be as follows:

Asphalt Rate, (GAL/SY)	Aggregate Rate, (CY/SY)
0.30	1:90 – 1:100

262 Construction Methods

Construction methods for the placement of the seal coat shall meet the requirements of Item 316 of the Texas Department of Transportation's *Standard Specifications for Construction of Highways, Streets, and Bridges.*

262.01 Stockpiles: Temporary stockpiling of aggregates on the right of way will be permitted, provided that the stockpiles are so placed as to allow for the safety of the traveling public and not obstruct traffic or sight distance, and do not interfere with access from abutting property, nor with roadway drainage. Location of stockpiles shall be either a minimum of 30 feet from the edge of the travel lanes or shall be signed and barricaded. Prior to final acceptance, the Contractor shall remove remaining aggregate stockpiles.

262.02 Temperature: Surface treatments shall not be applied when the air temperature is below 60°F and is falling, but may be applied when the air temperature is above 50°F and is rising. Surface treatments shall not be applied when the temperature of the surface on which the surface treatment is to be applied is below 60°F.

262.03 Preparation: The area to be treated shall be cleaned of all dirt, dust or other deleterious matter by sweeping or other approved methods. Manholes, valve boxes, grate inlets, and other utility access devices shall be protected from the surface treatment by placement of plywood discs or other approved materials. Button covers or another approved method shall be used to protect the existing raised pavement markers. The inspector shall approve the surface preparation prior to treatment.

262.04 Placing: The applied seal coat shall be rolled for its entire width with a multiple wheel self propelled pneumatic tire roller with provisions for loading up to 10 tons. Rolling shall begin longitudinally at the edges of the mat and progress towards the center, uniformly lapping each preceding track by at least ½ the width of the roller and be repeated as often as necessary to thoroughly key the cover aggregate into the bitumen over the entire surface. Aggregate impediment in the bitumen shall be 95%. The width of each application of asphaltic material shall be such to allow uniform application and immediate covering with aggregate. Paper or other suitable material shall used to prevent overlapping of transverse joints. Longitudinal joints shall match lane lines. The finished surface shall be cleared of any surplus aggregate by the Contractor by sweeping or other approved methods after all rolling is completed.

All holes or failures in the seal coat surface shall be repaired by use of additional asphalt and aggregate and all fat or bleeding surfaces shall be covered with approved cover material in such manner that the asphaltic material will not adhere to or be picked up on the wheels of vehicles. This maintenance will continue until the bleeding has stopped. Final acceptance of the project will occur after all excess rock is removed from project areas and all streets have been swept with approved sweeper.

263 Measurement and Payment

The one, two, or three course seal coat shall be measured and paid per square yard of seal coat in place. This pay item shall include all labor, material, and equipment to prepare existing pavement surface using pressure washers, sweepers, etc., the placement of the asphalt, the placement of the aggregate, and all incidentals necessary for the placement of a one course seal coat on existing city streets.

270 Portland Cement Concrete Pavement

271 General

271.01 Description: This item shall consist of a surface course as shown on plans, composed of Portland Cement Concrete.

271.02 Requirements: The surface course shall consist of a minimum of six (6") inches of Portland Cement Concrete, meeting City specifications for material and installation. Portland Cement Concrete surface course shall be installed with a crown of five (5") inches, measured from the gutter elevation to the centerline of the paved section.

271.03 Paving Construction Plan: The Contractor shall submit a paving construction plan for approval by the City Engineer prior to beginning pavement construction operations. The plan shall contain the mix design, methods of construction, description of equipment to be used in mixing, placing, finishing, curing, lighting and miscellaneous materials, and early usage of concrete pavement. The plan also shall include location, sequence, and construction methods for leaveouts if applicable.

272 Materials

272.01 Portland Cement Concrete: Concrete shall conform to the requirements of Section 900 “Concrete and Structures”. Classification and mix design shall conform to Class P concrete as defined in Section 900.

272.02 Joint Sealants: Unless otherwise shown on the plans, the joint sealant material shall be a Class 5 Self-leveling Low Modulus Silicone. The backer rods shall be compressible type materials, such as closed-cell, resilient foam or sponge rubber stock of vinyl, butyl or neoprene, or expanded polyethylene or polyurethane. The diameter of the backer rod shall be at least 25 percent larger than the joint reservoir width.

272.03 Dowels for Expansion and Contraction Joints: Dowels shall be smooth, straight steel dowels of the size and type shown on the plans and shall conform to the requirements of ASTM A615, Grade 60. Unless otherwise shown on the plans, the entire length of each dowel shall be coated with a hot applied asphalt cement. The asphalt coated end of each dowel to be used in an expansion joint shall be encased in an approved cap.

272.04 Positioning and Support Devices for Reinforcement and Joint Assemblies: These devices shall be of sufficient structural quality to prevent movement of the dowels or steel reinforcement during concrete placement and finishing.

Positioning and support devices (chairs) for steel reinforcement bars shall be either plastic or metal and of sufficient number to maintain the position of the bars within the allowable tolerances.

The support devices shall secure the joint assembly and dowels within the allowable tolerances while providing no restraint against joint movement. Dowels used in joint assemblies shall be secured in a parallel position by a transverse metal brace of the type and design shown on the plans.

272.05 Reinforcing Steel: ASTM A616 Grade 60 will be permitted for straight bars only. Reinforcing steel that requires bending shall be ASTM Grade 40 with the spacing reduced to 2/3 of that shown for Grade 60

A. Tie Bars: Tie bars at weakened plane longitudinal joints shall be straight reinforcing bars. Tie bars at longitudinal construction joints shall be either multiple piece tie bars or straight reinforcing bars.

B. Multiple Piece Tie Bars: Multiple piece tie bars (threaded coupling or other adequate devices) shall develop a tensile strength over the entire length equal to 1 ¼ times the yield strength of the tie bars shown. Each end of multiple piece tie bars shall consist of deformed reinforcement of at least the size shown on the plans. The deformed section of each end of the multiple piece tie bars shall be at least 1/2 the length of the tie bars shown on the plans. Unless otherwise shown on the plans, the spacing for the multiple piece tie bars shall be equal to or less than that of the transverse bars shown.

272.06 Curing Material: Curing material shall conform to Type 2 Class A curing compound.

273 Equipment

273.01 General: All equipment shall be maintained in good condition and approved by the City Engineer before the Contractor will be permitted to begin construction of the pavement. When concrete pavement is not formed, equipment used in the spreading and finishing of concrete pavement shall be designed to be operated on a prepared track grade controlled by electronic sensor systems. The systems used on a prepared track grade shall operate from an adequately supported string line or equivalent system approved by the Engineer.

273.02 Forms: Side forms shall be of metal except as otherwise provided herein and shall be of approved cross section. The length of form sections shall not be less than 10 feet, and each section shall provide for staking in position with not less than three (3) pins. Forms shall be of ample strength and shall be provided with adequate devices to secure them in place so the forms will withstand, without visible springing or settlement, the impact and vibration of the spreading and finishing machinery.

In no case shall the base of the form be less than eight (8) inches wide for a form depth of eight inches or more in height. The forms shall be free from warps, bends or kinks, and shall be sufficiently true to provide a reasonably straight edge on the concrete.

Flexible or curved forms of wood or metal of proper radius shall be used for curves of 100 foot radius or less.

The preferred depth of the form shall be equal to the required edge thickness of the pavement. Forms with depth greater or less than the required edge thickness of the pavement will be permitted provided the difference between the form depth and the edge thickness is not greater than two (2) inches, and further provided that:

Forms of a depth greater than the pavement edge may be used if the supporting material is planed to construct a form trench.

Forms of a depth less than the pavement edge shall be brought to the required edge thickness by securely attaching metal strips or wood shims of approved section to the full width and length of the base of the form.

Outside curb forms shall be of wood or metal, straight, free of warp, and shall be of a depth at least equal to the depth of the curb. They shall be securely mounted on the paving forms and maintained in true position during the placing of concrete.

273.03 Concrete Spreader: A mechanical concrete spreader shall conform to the following requirements:

A. Be a self propelled machine having sufficient power and traction to spread and strike off concrete without slippage,

B. Be equipped with a power driven device, either a reciprocating blade, screw conveyor or a belt conveyor, for spreading the concrete uniformly,

C. And be capable of striking off the concrete slab at the depth and grade required.

273.04 Slipform Paver: Slipform pavers shall be equipped to spread the concrete uniformly and strike off the concrete to the required section, using a power driven device, either a reciprocating blade, a screw conveyor, or a belt conveyor, without loss of traction.

The slipform paver shall have an electronic sensor system or equivalent to provide grade control for the paver. The slipform paver shall be equipped with consolidation equipment.

273.05 Floats: Floats shall be either mechanically operated oscillating longitudinal floats or tube floats capable of producing a uniformly smooth surface. Tube floats shall be designed to operate at an angle of greater than 30 degrees from normal when rotated in either direction. The tube float shall be equipped to provide a fine light fog mist.

273.06 Vibrators: Immersion vibrators shall be spaced at not more than 24 inches and shall be equipped with synchronized vibratory units. Approved hand operated immersion vibrators shall be furnished in sufficient number for proper consolidation of the concrete along forms, at joints and in areas not covered by mechanically controlled vibrators. Pan vibrators shall apply vibration directly to the surface of the concrete.

273.07 Finishing Equipment:

A. Finishing Machine: The transverse finishing machine shall have two (2) screeds

accurately adjusted to the crown of the pavement finishing machine. The transverse finishing machine shall be capable of striking off and consolidating the concrete. It shall be equipped with consolidation equipment and shall be self propelled and mounted in a substantial frame equipped to ride on the forms, or may be a slipform finisher.

B. Manually Operated Finishing Screed: A manually operated finishing screed shall be a strike template and a tamping template or a vibratory screed at least two (2) feet longer than the width of the pavement. Both templates shall be capable of conforming to the crown of the pavement.

C. Straightedges: The Contractor shall furnish at least two (2) standard 10-foot steel or magnesium straightedges.

D. Work Bridges: The Contractor shall furnish a sufficient number of bridges capable of spanning the pavement for finishing operations and for the installation and finishing of joints.

E. Mechanical Dowel and Reinforcement Inserting Equipment: This equipment shall be capable of accurately inserting and positioning the dowels and/or reinforcement in the plastic concrete parallel to the profile grade and horizontal alignment and in accordance to the plan details.

F. Texturing Equipment:

1. Carpet Drag: Carpet drag shall be mounted on a workbridge or a movable support system capable of varying the area of carpet in contact with the pavement. The carpet drag shall be a single piece of carpet long enough to span the full width of the pavement and adjustable so as to have up to a four (4) foot longitudinal length of carpet in contact with the concrete. The carpeting used shall be an artificial grass type having a molded polyethylene pile face with a blade length of 5/8 inch to one (1) inch and a minimum weight of 70 ounces per square yard.

2. Transverse Metal Tining Device: The transverse metal tining device shall be equipped with four (4) inch to six (6) inch steel tines, spaced nominally at one (1) inch, center to center, approximately 0.032 inch by 0.083 inch, adjustable so as to obtain randomized grooves approximately 3/16 inch deep, with a minimum depth of 1/8 inch.

274 Quality of Concrete

274.01 Requirements: The quality of concrete shall be in accordance with Section 900 "Concrete and Structures", and the additional requirements herein:

Additional flexural strength test specimens may be made as required by concrete placing conditions or for adequately determining the strength of the concrete where the early opening of the pavement to traffic is dependent on concrete strength tests. For early opening to traffic, the flexural strength specimens shall be cured at the same time and in the same manner as the pavement.

275 Subgrade, Subbase, and Forms

275.01 Requirements: The concrete pavement shall be constructed on a prepared surface as shown on the plans. When slipform equipment is used, a firm subgrade or subbase shall be maintained outside the limits of the pavement for the support of the slipform equipment.

The subgrade or subbase shall be maintained in a smooth, compacted condition until the pavement is placed and shall be kept thoroughly wetted sufficiently in advance of placing any pavement. All damage to the prepared subgrade shall be corrected by the Contractor at the Contractor's expense.

The subgrade under the forms shall be firm and cut to grade so that each form section is firmly in contact with the subgrade for its whole length and base width. When minor irregularities exist, forms shall be leveled using a stabilized, sufficiently plastic, material to fill the voids underneath the side forms. Paving equipment will not be permitted on the forms until the stabilized material has cured completely.

All adjustments to the plan gradeline will require written approval of the City Engineer.

276 Joints

276.01 Sawed Joints: All joints shall be sawed and sealed before placing concrete in adjacent lanes and before permitting traffic to use the pavement.

When sawed joints are used, they shall be sawed to the depth as shown on the plans as soon as sawing can be accomplished without damage to the pavement. Once sawing has commenced it shall be continued until completed. All sawing must be completed within 12 hours of placement. Sawing must be accomplished even in rain and cold weather.

The part of the seal of the curing compound which has been disturbed by sawing operations shall be resprayed by the Contractor.

The transverse weakened plane joints shall be formed or sawed perpendicular to the centerline and surface of the pavement.

276.02 Construction Joints: When the placing of concrete is stopped, a bulkhead of sufficient cross sectional area to prevent deflection, accurately notched to receive the load transmission devices and shaped accurately to the cross section of the pavement shall be provided.

Intentional stoppage of the placing of the concrete shall be at either an expansion joint or a weakened plane joint.

Joints in the curb shall be of the same type and location as the adjacent pavement. The expansion joint material shall be of the same thickness, type and quality as specified for the pavement.

When transverse sawed joints are provided for the pavement, the curb placement shall be delayed until the transverse joints in the pavement have been sawed. Dowel bars shall be placed while the pavement is still plastic. The weakened plane joint in the monolithic curbs may be formed or sawed.

277 Construction Methods

277.01 Finishing: Machine-finishing of pavement shall include the use of power-driven spreaders, power driven vibrators, power driven strike-off, and screed.

The transverse finishing of pavement shall be operated to compact and strike-off the concrete to the required section and grade, without surface voids. The machine shall be operated over each area as many times and at such intervals as needed to consolidate and shape the surface. After completion of finishing with the transverse finishing machine a float may be used.

The Contractor shall perform sufficient checks with a long handled 10-foot straightedge on the plastic concrete to insure that the final surface will be within the tolerances specified below. The check shall be made with the straightedge parallel to the centerline. Each pass shall lap half of the preceding pass. All high spots shall be removed and all depressions over 1/16 inch in depth shall be filled with fresh concrete and floated.

Final finish shall consist of a combination of a carpet drag and metal tine finish. Final finish shall be completed before the concrete has attained its initial set. Successive passes of the tines shall not overlap a previous pass. After completion of texturing, the edge of the slab and joints shall be carefully finished.

The Contractor shall have available at all times hand operated tining equipment and hand operated carpet drags for the purpose of providing texture in the event of equipment breakdown.

277.02 Curing: After final finish and immediately after free moisture has disappeared, the concrete surface shall be sprayed uniformly with curing compound. Special care shall be taken to insure that the sides of the tining grooves are coated with curing compound. All concrete pavement shall be cured for a period of not less than 72 hours from the beginning of curing operations.

277.03 Opening to Traffic: The pavement shall be closed to all traffic, including vehicles of the Contractor, until the concrete is at least four days old. At the end of this period the pavement may be opened for use by vehicles of the Contractor provided the gross weight of such vehicles and/or equipment does not exceed 14,000 pounds. On those sections of the pavement to be opened to traffic, all joints shall first be sealed and the pavement cleaned. Stable material shall be placed against the pavement edges before permitting vehicles thereon.

After the concrete in any section of pavement is seven (7) days old, such section of pavement may be opened to traffic. When an occasional crossing of overweight equipment is permitted, temporary matting or other methods may be required.

278 Testing

278.01 Minimum Requirements: The Contractor shall provide independent lab testing to determine compliance to these specifications. One strength test shall be taken for every 50 cubic yards or fraction thereof. Testing for slump and air content shall be performed for each set of strength specimens. Testing for thickness compliance shall be done by the city's construction inspector at the time of placement at least every 500 lineal feet per travelway.

Any area of pavement found deficient in thickness by more than one (1) inch or more than 1/8 of the plan thickness, whichever is greater, shall be evaluated by the City Engineer.

279 Payment

279.01 Measurement and Payment: The work performed and materials furnished, as prescribed by this item and measured by the square yard of completed surface, will be paid for at the unit bid price for "Portland Cement Concrete Pavement" of the type specified, which price shall be full compensation for furnishing all materials and freight involved; for all required testing, for all heating, mixing, hauling, cleaning the existing base course; placement of rebar; placing plastic chairs; and for all manipulations, labor, tools, equipment and incidentals necessary to satisfactorily complete the work.

280 Concrete Curb and Gutter

281 Description: This section consists of Portland Cement concrete curb and gutter with Grade 60 reinforcing steel conforming to ASTM A-615; constructed over a compacted subgrade and at least 2" of compacted flexible base, all in accordance with these specifications and in conformity with the lines and grades approved by the Engineer.

282 **Materials**: Materials and proportions for concrete used in construction under this section shall conform to the requirements as specified under the pertinent sections of these specifications (Section 900, Concrete Construction).

283 **Construction Methods:**

A. Subgrade: The subgrade shall be excavated, compacted, and shaped to line, grade, and cross section in accordance with these specifications and in conformity with the lines and grades provided by the Engineer. For residential streets, a minimum of 2" of flexible base shall placed as shown in the street cross section details. For Collector and Arterial streets a minimum of 2" of Type 'B' asphalt base shall be used under the curb and gutter as shown in the street cross section details. If flexible base is being used under an asphalt surface then after the curb and gutter has been placed and cured the remaining flexible base shall be placed at the thickness required to conform to the lines and grades shown on the plans.
B. Forms: All forms shall meet the requirements as specified under Section 920.08. When extruded or slipformed concrete is used for curb and gutter placement, the concrete shall be placed with self-propelled equipment. The line shall be maintained from a guideline set by the Contractor based on the alignment data shown on the plans. The outline shall strictly conform to the details shown on the plans. The forming tube of the extrusion machine or the form of the slipform machine shall be readily adjustable vertically during the forward motion of the machine to provide required variable heights necessary to conform to the established grade line.
C. Reinforcing Steel: The reinforcing steel shall be placed in position and of the diameter shown on the typical section. All steel shall be kept in its proper placement and position, without contact with the forms, the ground, or joint material. All reinforcing steel shall be grade 60 unless otherwise indicated.
D. Mixing, Placing, and Finishing Concrete: Concrete for curb and gutter shall be mixed in a manner satisfactory to the Engineer. It shall be poured in sections of length indicated on the standard detail on an approved material to cross sections specified for the curb and gutter, and of the required thickness.
E. Curing: The completed curb and gutter shall be cured as specified with one of the methods in Section 921. Acceptable curing compounds, if applied in accordance to manufacturer's specifications, may be used in lieu of mats or burlap. The back of the curb shall be cured in the same manner as the face of the curb and gutter.
F. Compaction: The fill material placed behind the curb shall be compacted to 90% standard proctor density (ASTM D-698) for a distance of ten (10') feet, measured from the curb.
G. Expansion Joints: Expansion joints shall be placed perpendicular to the centerline of the street at eighty (80') foot intervals, and at the P.C. and/or P.T. of a curve or return into an intersection. Furthermore, curb and gutter will be scored at ten (10') foot intervals.
H. Expansion Joint Material: Joint Material shall be asphalt-impregnated fiber-board. The joint material shall be the full depth of the concrete across its full width, a minimum thickness of 0.5".
I. Dowel Bars: Dowel Bars shall be No. 4 smooth steel bars placed through each expansion joint and at "cold" pour joints. To allow horizontal, longitudinal movement, each bar shall have one end enclosed in an acceptable cap, wrapped in asphaltic felt, or adequately greased for a full twelve (12") inch length to the expansion joint material.

284 **Alternate Curb Design:** Submittals for alternate curb designs will be reviewed individually by the City Engineer for approval as an alternate to the City Specified Standard Curb Detail.

285 **Payment**: The work performed and materials furnished as prescribed by this item and measured by the linear foot of completed curb and gutter and will be paid for at the unit price bid for "Concrete Curb and Gutter" of the type specified, which price shall be full compensation for furnishing and supplying all water, mortar, adhesives or other material, including reinforcing steel; for furnishing, loading, and unloading, storing, hauling and handling all ingredients, including freight and royalty involved; for mixing, placing, finishing, and curing all concrete; for furnishing all materials for sealing joints and placing joints, and joint filler material; and for all manipulations, labor equipment, appliances, tools and incidentals necessary to satisfactorily complete the work.

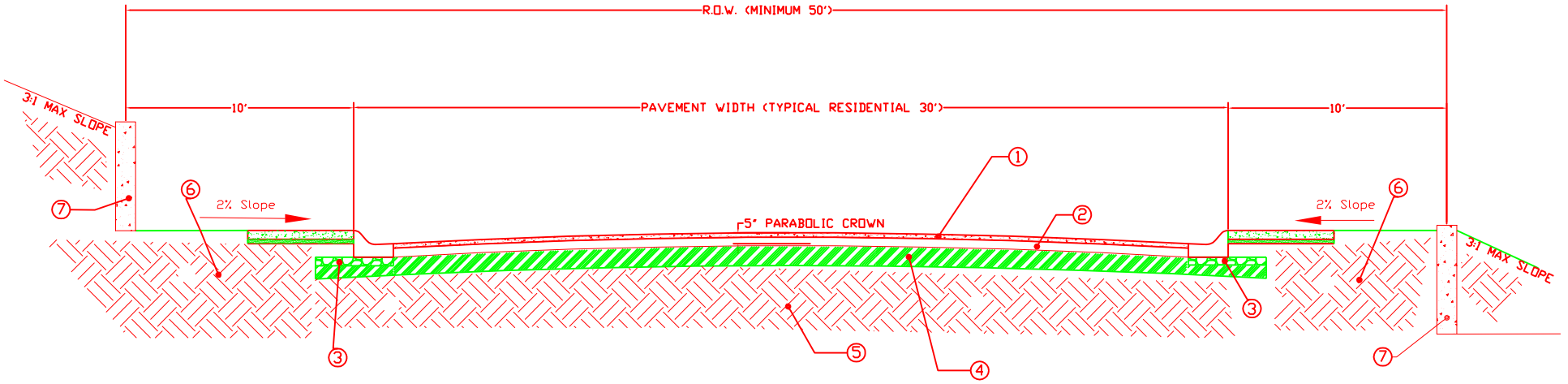

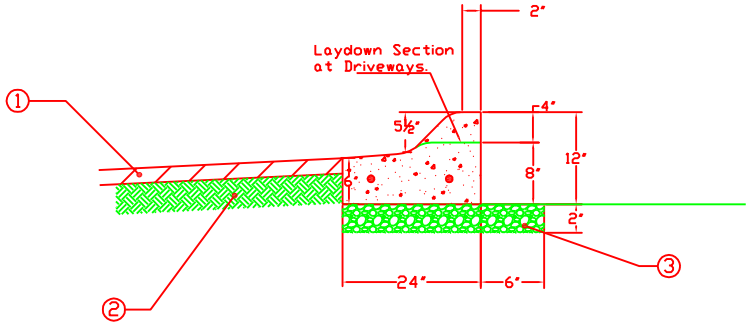

INVERTED CROWN SECTION

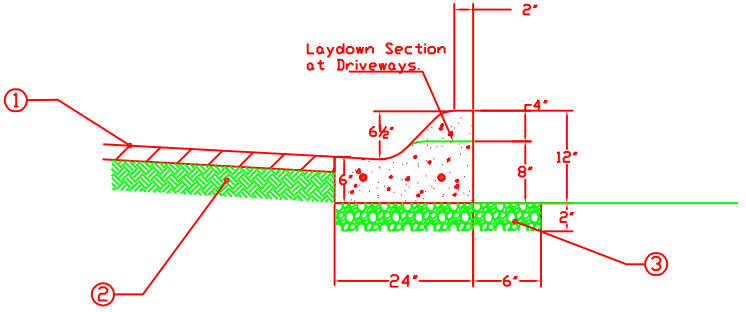

PARABOLIC CROWN SECTION

NOTES:

5' SIDEWALKS MUST BE CONSTRUCTED ON COLLECTOR AND ARTERIAL STREETS AS PART OF CONSTRUCTION.

STEEL IN CURB WILL BE #4 BARS CENTERED VERTICALLY IN CONCRETE. NO STEEL WILL COME WITHIN 2 INCHES OF OUTER EDGE OF CONCRETE.

AT EXPANSION JOINTS, STEEL WILL BE SMOOTH WITH SLEEVE ON ONE END TO ALLOW MOVEMENT.

STREET AND RIGHT OF WAY WIDTHS DERIVED FROM THE CURRENT EDITION OF THE "KERRVILLE COMPREHENSIVE PLAN".

TESTING TO BE DONE IN ACCORDANCE WITH SECTION 223, CITY OF KERRVILLE STANDARD SPECIFICATIONS.

ALTERNATE PAVEMENT DESIGN MUST BE SUBMITTED TO CITY ENGINEER FOR APPROVAL AND MUST BE BASED ON A GEOTECHNICAL INVESTIGATION AND DESIGN-LIFE OF THIRTY (30) YEARS.

1. 2" TYPE "D" HMAC
2. 4" TYPE "B" HMAC
3. 2" X 30" FLEX BASE UNDER CURB, 100% STANDARD PROCTOR.
4. 6" SUBGRADE, 95% STANDARD PROCTOR. IF MOISTURE SENSITIVE MATERIAL, SEE SECTION 212 IN CITY OF KERRVILLE STANDARD SPECIFICATIONS.
5. AREAS OF FILL, SEE SECTION 220, CITY OF KERRVILLE STANDARD SPECIFICATIONS.
6. AREA BEHIND BACK OF CURB COMPACTED TO 90% STANDARD PROCTOR.
7. RETAINING WALL MAY BE REQUIRED WHERE UNSTABLE EMBANKMENT CONDITIONS EXIST. CERTAIN CONDITIONS MAY ALSO REQUIRE GUARD RAILS. SEE SECTION 211.04, CITY OF KERRVILLE STANDARD SPECIFICATIONS.

Residential Street Detail & Field Density Testing

City of Kerrville

Standard Specifications

SIZE	FSCM NO.	DWG NO.	REV
		290.01	
SCALE		SHEET	

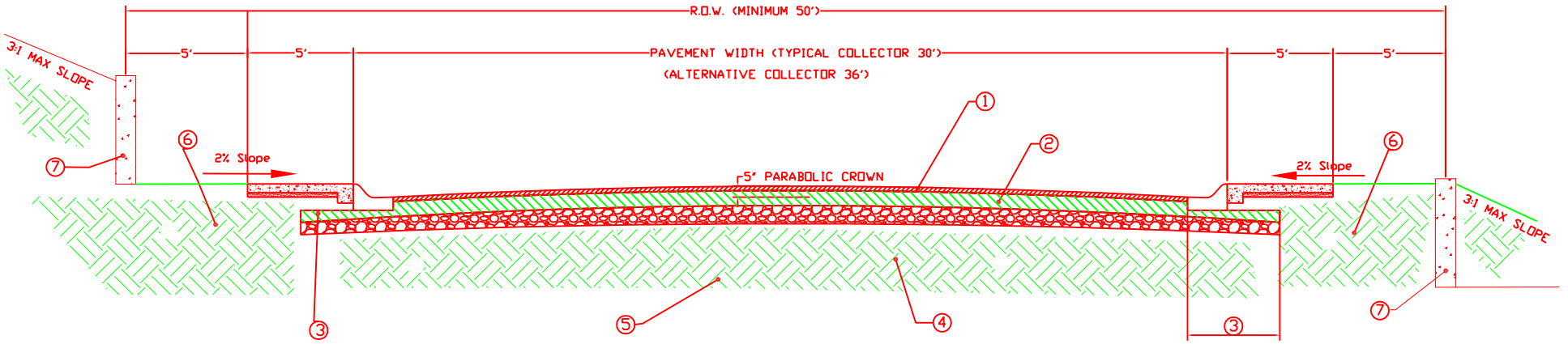

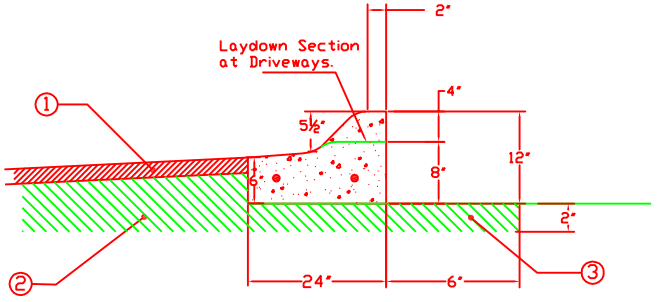

INVERTED CROWN SECTION

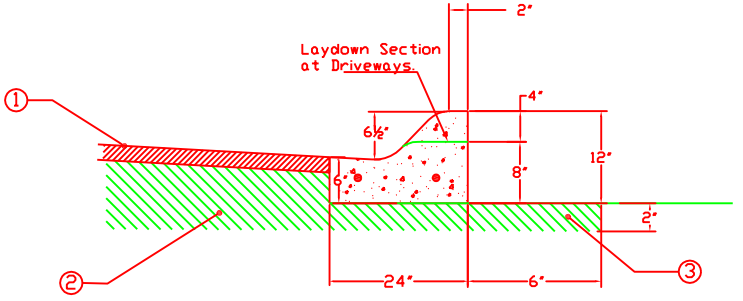

PARABOLIC CROWN SECTION

NOTES:

5' SIDEWALKS MUST BE CONSTRUCTED ON COLLECTOR AND ARTERIAL STREETS AS PART OF CONSTRUCTION.

STEEL IN CURB WILL BE #4 BARS CENTERED VERTICALLY IN CONCRETE. NO STEEL WILL COME WITHIN 2 INCHES OF OUTER EDGE OF CONCRETE.

AT EXPANSION JOINTS, STEEL WILL BE SMOOTH WITH SLEEVE ON ONE END TO ALLOW MOVEMENT.

STREET AND RIGHT OF WAY WIDTHS SHALL BE DERIVED FROM THE CURRENT EDITION OF THE "KERRVILLE COMPREHENSIVE PLAN".

TESTING TO BE DONE IN ACCORDANCE WITH SECTION 223, CITY OF KERRVILLE STANDARD SPECIFICATIONS.

ALTERNATE PAVEMENT DESIGN MUST BE SUBMITTED TO CITY ENGINEER FOR APPROVAL AND MUST BE BASED ON A GEOTECHNICAL INVESTIGATION AND DESIGN-LIFE OF THIRTY (30) YEARS.

1. 2" TYPE "D" HMAC
2. 6" TYPE "B" HMAC, PLACED IN MINIMUM 2 LIFTS.
3. 2" X 30" TYPE "B" HMAC.
4. 6" SUBGRADE, 95% STANDARD PROCTOR. IF MOISTURE SENSITIVE MATERIAL, SEE SECTION 212 IN CITY OF KERRVILLE STANDARD SPECIFICATIONS.
5. AREAS OF FILL, SEE SECTION 220, CITY OF KERRVILLE STANDARD SPECIFICATIONS.
6. AREA BEHIND BACK OF CURB COMPACTED TO 90% STANDARD PROCTOR.
7. RETAINING WALL MAY BE REQUIRED WHERE UNSTABLE EMBANKMENT CONDITIONS EXIST. CERTAIN CONDITIONS MAY ALSO REQUIRE GUARD RAILS. SEE SECTION 211.04, CITY OF KERRVILLE STANDARD SPECIFICATIONS.

Collector Street Detail & Field Density Testing

City of Kerrville
Standard Specifications

SIZE	FSCM NO.	DWG NO.	REV
		290.02	
SCALE		SHEET	

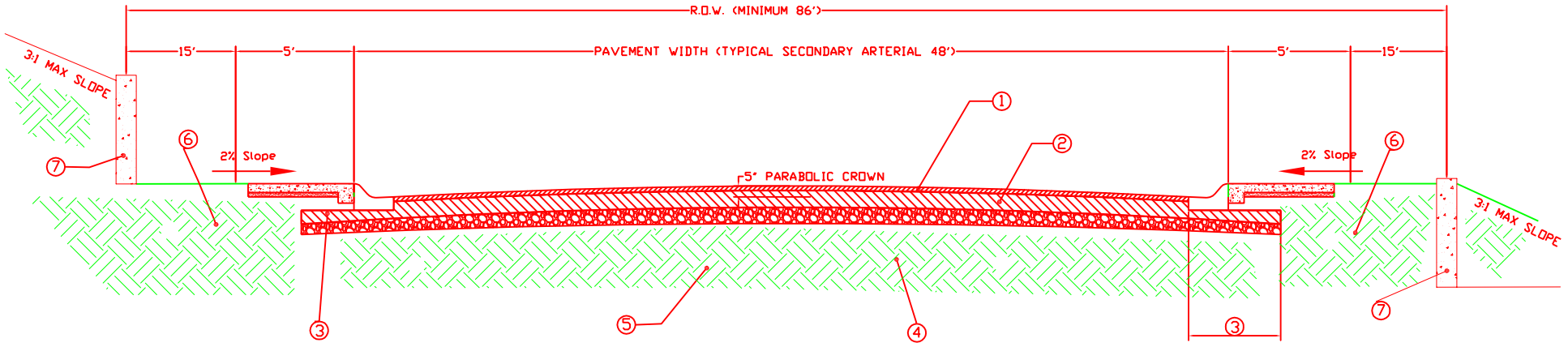

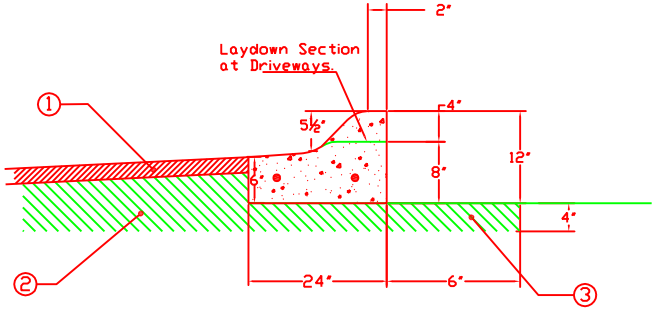

INVERTED CROWN SECTION

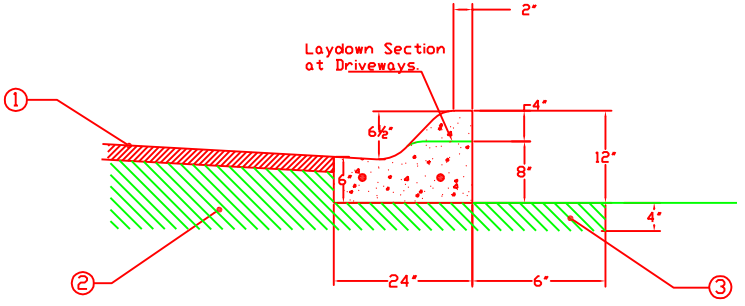

PARABOLIC CROWN SECTION

NOTES:

5' SIDEWALKS MUST BE CONSTRUCTED ON COLLECTOR AND ARTERIAL STREETS AS PART OF CONSTRUCTION.

STEEL IN CURB WILL BE #4 BARS CENTERED VERTICALLY IN CONCRETE. NO STEEL WILL COME WITHIN 2 INCHES OF OUTER EDGE OF CONCRETE.

AT EXPANSION JOINTS, STEEL WILL BE SMOOTH WITH SLEEVE ON ONE END TO ALLOW MOVEMENT.

STREET AND RIGHT OF WAY WIDTHS SHALL BE DERIVED FROM THE CURRENT EDITION OF THE "KERRVILLE COMPREHENSIVE PLAN".

TESTING TO BE DONE IN ACCORDANCE WITH SECTION 223, CITY OF KERRVILLE STANDARD SPECIFICATIONS.

ALTERNATE PAVEMENT DESIGN MUST BE SUBMITTED TO CITY ENGINEER FOR APPROVAL AND MUST BE BASED ON A GEOTECHNICAL INVESTIGATION AND DESIGN-LIFE OF THIRTY (30) YEARS.

1. 2" TYPE "D" HMAC
2. 8" TYPE "B" HMAC, PLACED IN MINIMUM 2 LIFTS.
3. 4" X 30" TYPE "B" HMAC.
4. 6" SUBGRADE, 95% STANDARD PROCTOR. IF MOISTURE SENSITIVE MATERIAL, SEE SECTION 212 IN CITY OF KERRVILLE STANDARD SPECIFICATIONS.
5. AREAS OF FILL, SEE SECTION 220, CITY OF KERRVILLE STANDARD SPECIFICATIONS.
6. AREA BEHIND BACK OF CURB COMPACTED TO 90% STANDARD PROCTOR.
7. RETAINING WALL MAY BE REQUIRED WHERE UNSTABLE EMBANKMENT CONDITIONS EXIST. CERTAIN CONDITIONS MAY ALSO REQUIRE GUARD RAILS. SEE SECTION 211.04, CITY OF KERRVILLE STANDARD SPECIFICATIONS.

Arterial Street Detail

City of Kerrville

Standard Specifications

SIZE	FSCM NO.	DWG NO.	REV
		290.03	
SCALE		SHEET	

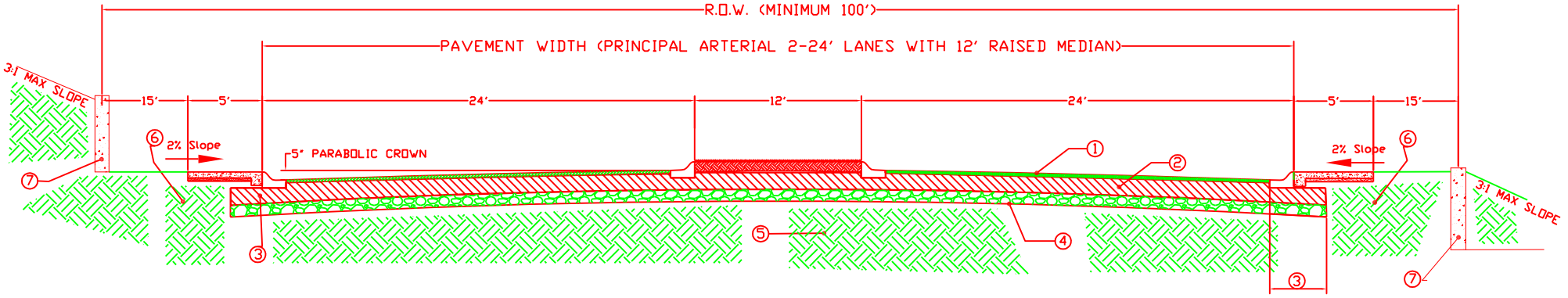

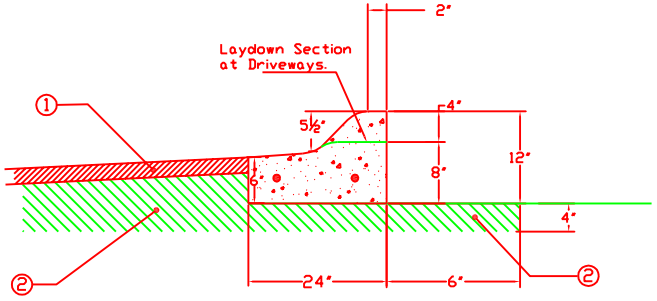

INVERTED CROWN SECTION

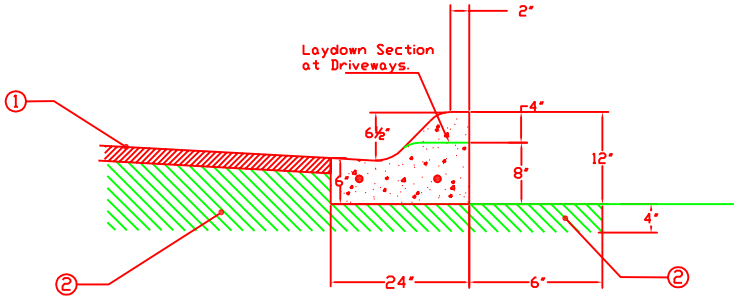

PARABOLIC CROWN SECTION

NOTES:

5' SIDEWALKS MUST BE CONSTRUCTED ON COLLECTOR AND ARTERIAL STREETS AS PART OF CONSTRUCTION.

STEEL IN CURB WILL BE #4 BARS CENTERED VERTICALLY IN CONCRETE. NO STEEL WILL COME WITHIN 2 INCHES OF OUTER EDGE OF CONCRETE.

AT EXPANSION JOINTS, STEEL WILL BE SMOOTH WITH SLEEVE ON ONE END TO ALLOW MOVEMENT.

STREET AND RIGHT OF WAY WIDTHS SHALL BE DERIVED FROM THE CURRENT EDITION OF THE "KERRVILLE COMPREHENSIVE PLAN".

TESTING TO BE DONE IN ACCORDANCE WITH SECTION 223, CITY OF KERRVILLE STANDARD SPECIFICATIONS.

ALTERNATE PAVEMENT DESIGN MUST BE SUBMITTED TO CITY ENGINEER FOR APPROVAL AND MUST BE BASED ON A GEOTECHNICAL INVESTIGATION AND DESIGN-LIFE OF THIRTY (30) YEARS.

1. 2" TYPE "D" HMAC
2. 8" TYPE "B" HMAC, PLACED IN MINIMUM 2 LIFTS.
3. 4" X 30" TYPE "B" HMAC.
4. 6" SUBGRADE, 95% STANDARD PROCTOR. IF MOISTURE SENSITIVE MATERIAL, SEE SECTION 212 IN CITY OF KERRVILLE STANDARD SPECIFICATIONS.
5. AREAS OF FILL, SEE SECTION 220, CITY OF KERRVILLE STANDARD SPECIFICATIONS.
6. AREA BEHIND BACK OF CURB COMPACTED TO 90% STANDARD PROCTOR.
7. RETAINING WALL MAY BE REQUIRED WHERE UNSTABLE EMBANKMENT CONDITIONS EXIST. CERTAIN CONDITIONS MAY ALSO REQUIRE GUARD RAILS. SEE SECTION 211.04, CITY OF KERRVILLE STANDARD SPECIFICATIONS.

Principal Arterial Street Detail

City of Kerrville
Standard Specifications

SIZE	FSCM NO.	DWG NO.	REV
		290.04	
SCALE		SHEET	

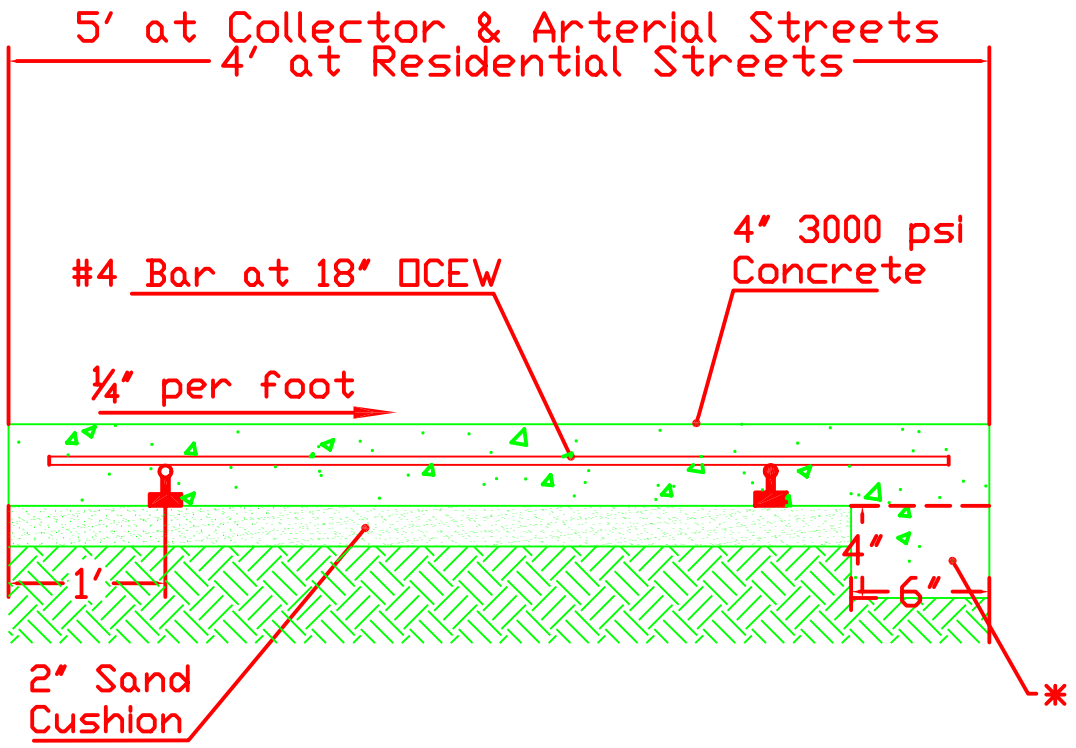

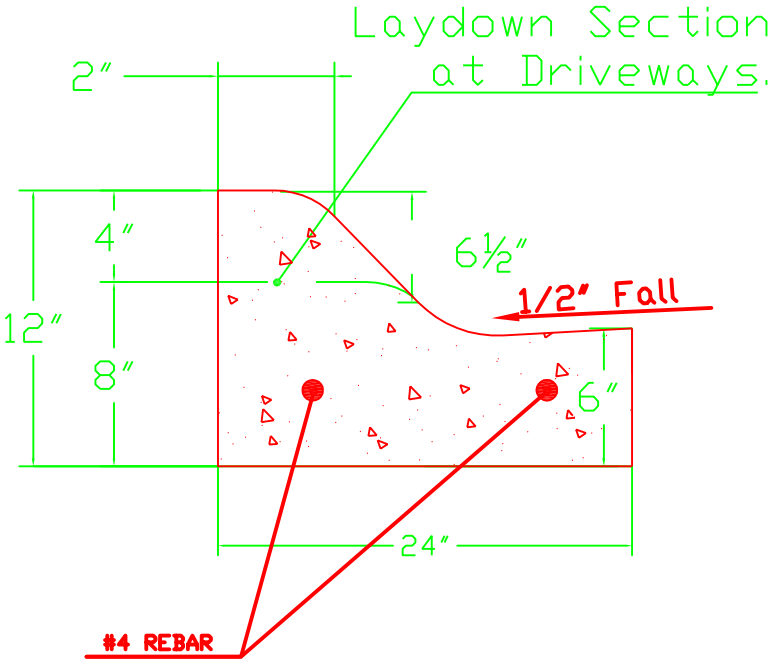

SIDEWALK NOTES:

SIDEWALKS WILL BE CONSTRUCTED TO COMPLY WITH ALL ADA AND TDLR STANDARDS

EXPANSION JOINTS (¾") SHALL BE INSTALLED NO FURTHER THAN 40 FEET APART. DUMMY JOINTS WILL BE INSTALLED EVERY 5 FEET. SEE CITY OF KERRVILLE STANDARD SPECIFICATIONS, SECTION 942, FOR MORE DETAILS.

1.5"-2" CHAIRS SHALL BE USED EVERY 5 LF OR AS NECCESSARY TO HOLD REINFORCEMENT ABOVE THE GROUND AND BE PLACED 1' FROM OUTSIDE EDGE OF SIDEWALK,

* FOOTER ONLY NEEDED IF SIDEWALK ABUTTS CURB.

CURB NOTES:

EXPANSION JOINTS WILL BE SMOOTH WITH SLEEVES ON ONE END TO ALLOW MOVEMENT.

STEEL IN CURB WILL BE #4 BARS CENTERED VERTICALLY IN CONCRETE. NO STEEL WILL COME WITHIN 2 INCHES OF EDGE OF CONCRETE.

DEPTHS AND TYPES OF BASE MATERIAL UNDERNEATH CURB VARIES WITH STREET DESIGNATIONS. SEE CITY OF KERRVILLE SPECIFICAITON SECTIONS 290.01 - 290.04.

SEE SECTION 280, CITY OF KERRVILLE STANDARD SPECIFICATIONS FOR MORE DETAILS.

Curb & Sidewalk Details

City of Kerrville

Standard Specifications

SIZE	FSCM NO.	DWG NO.	REV
		290.05	
SCALE		SHEET	

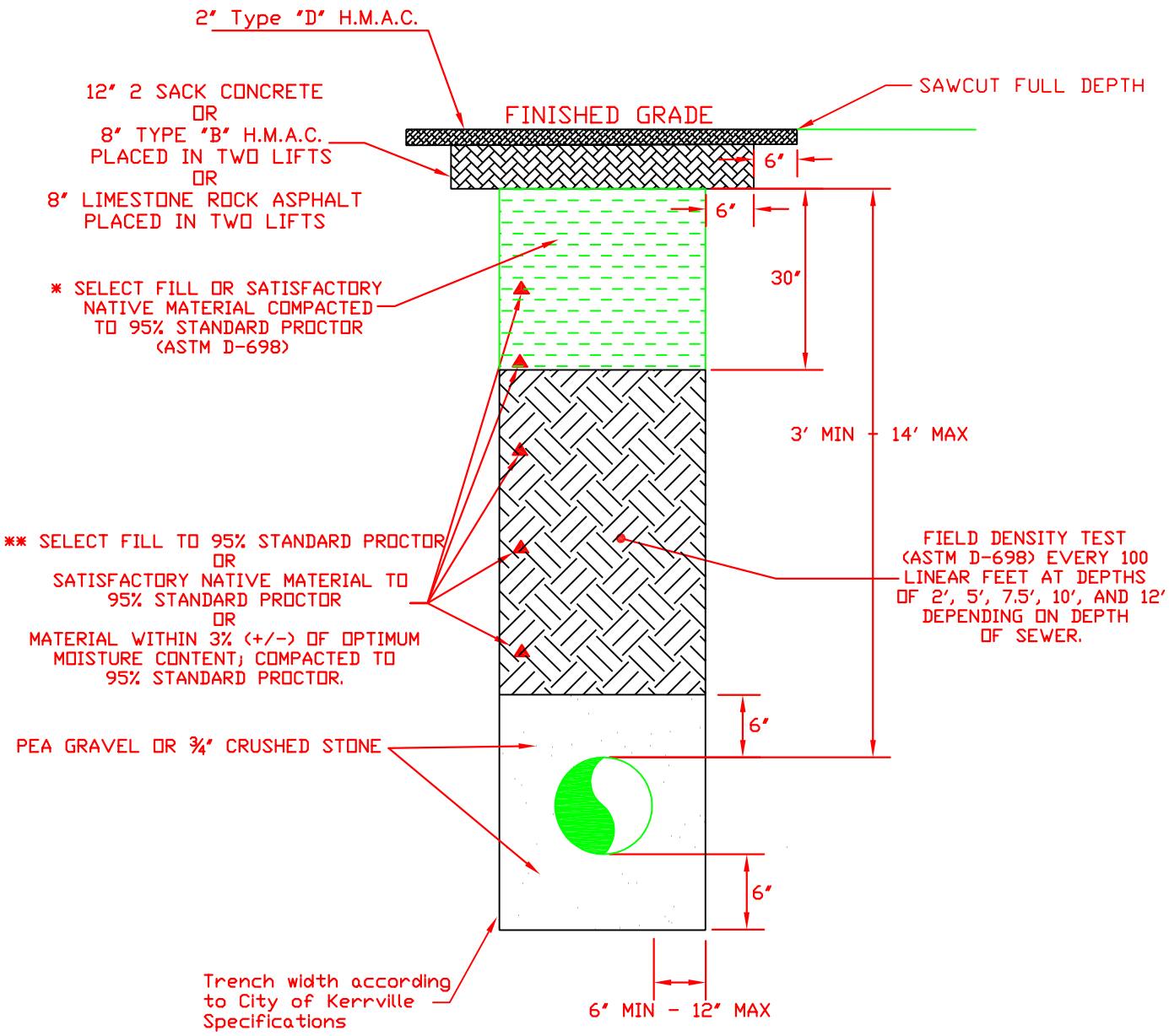

INSTALLATION OF
PIPE TO FOLLOW
CITY OF KERRVILLE
SUBDIVISION SPECIFICATIONS

NOTES:

* MOISTURE SENSITIVE MATERIAL COMPACTED TO 95% STANDARD PROCTOR AND WITHIN 3% (+/-) OF OPTIMUM MOISTURE CONTENT MAY BE USED WHERE WATER LINE IS NOT UNDERNEATH PAVEMENT.

** MODIFIED PROCTOR (ASTM D-1557) MUST BE USED AT DEPTHS GREATER THAN 10 FEET.

▲ REPRESENTS FIELD DENSITY TEST LOCATION

Pavement Repair Detail

City of Kerrville

Standard Specifications

SIZE	FSCM NO.	DWG NO.	REV
		290.06 a	
SCALE		SHEET 1 of 2	

Water Specifications
Section 300

310 Design Criteria for Water Distribution

311 General Information

These design criteria are minimum requirements to be used in the design of water distribution systems within the jurisdiction of the City of Kerrville. The jurisdiction of the City of Kerrville is defined as the area bound by the ETJ of the City of Kerrville. In all cases, the Texas Commission on Environment Quality's Design Criteria for water distributions systems shall be enforced as the minimum design criteria for use in the City of Kerrville. Fire flows shall meet the required flows and corresponding residual pressures as specified by the local governing Fire Code. The following design criteria will be supplemented by the TCEQ design criteria.

311.01 General Design Criteria

A. C = 120 (Hazen-Williams Friction Coefficient)
B. Average day demand, single family residence, = 200 gal/capita/day
C. Peak day demand = 500 gal/capita/day
D. Peak hour demand = 750 gal/capita/day

311.02 Peak Hour Demand

A. Maximum velocity in distribution system = 5 fps
B. Minimum pressure at any point of entire network must be not less than 35 psi.

311.03 Emergency Demand (Fire Flow)

A. Maximum velocity in distribution system = 10 fps
B. Fire flow - Residential
1 & 2 family dwellings where distance between homes is more than 31 feet apart = 750gpm
where distance between homes is 11-30 feet = 1000 gpm
where distance between homes is 10 or less feet = 1500 gpm

Fire flow – Commercial/Industrial
Principal Mercantile and industrial areas = 3000gpm
Light mercantile = 1500 gpm

Minimum industrial = 1,000 gpm

C. Minimum residual pressure during fire flow shall not be less than 20 psi for both Residential and Commercial/Industrial.

312 Design Criteria - Mains

312.01 Size: Size of mains shall conform to the Kerrville Water Master Plan. Minimum size of mains shall be 8". Mains size shall be larger than 8" if the flow needed for fire protection, peak hour demand or high-density land usage exceeds the capacity of the minimum main size.

312.02 Layout: Water distributions system layout should be designed with consideration for general system gridding, future transmission mains, and other developments nearby. All lines over 300 feet in length shall be looped, non-looped mains must be approved by the City Engineer. In the case of a non-looped main, a 2" blowoff valve or fire hydrant shall be placed at the end of main. Water mains that cross rivers and creeks shall either be affixed to the underside of a bridge as approved by the City Engineer or in most cases be buried and shall always use River & Creek Crossing Pipe per Item 370 Standard Product List or as approved by the City Engineer.

312.03 Cover: Water mains shall have 36” of cover minimum and 60” cover maximum between the top of the pipe and the finished grade.

312.04 Location: Water mains should be located where maintenance can be accomplished with the least interference with traffic, structures, and other utilities and for residential streets is generally is located as shown in the details at the end of this section. The minimum easement width for water lines that are not in the Right of Way is twenty feet (20’). The separation between water and wastewater mains shall comply with the following TCEQ requirements.

Where the nine-foot separation distance cannot be achieved, the following criteria shall apply:

(A) New Waterline Installation - Parallel Lines

1. Where a new potable waterline parallels an existing, non-pressure or pressure rated wastewater line/force main and the licensed professional engineer is able to determine that the existing line is not leaking, the new potable waterline shall be located at least two feet above the existing line, measured vertically, and at least four feet away, measured horizontally, from the existing line.

Every effort shall be exerted not to disturb the bedding and backfill of the existing wastewater line and if disturbed it must be replaced.
2. Where a new potable waterline parallels an existing pressure rated wastewater line and it cannot be determined by the licensed professional engineer if the existing line is leaking, the existing wastewater line shall be replaced with a 150 psi pressure rated pipe. The new potable waterline shall be located at least two feet above the new wastewater line, measured vertically, and at least four feet away, measured horizontally, from the replaced wastewater line.

3. Where a new potable waterline parallels a new wastewater line/force main, the wastewater line shall be constructed of 150 psi pressure rated pipe. The new potable waterline shall be located at least two feet above the wastewater line, measured vertically, and at least four feet away, measured horizontally, from the wastewater line.

(B) New Waterline Installation – Crossing Lines

1. Where a new potable waterline crosses an existing, non-pressure rated wastewater line, one segment of the waterline pipe shall be centered over the wastewater line such that the joints of the waterline pipe are equidistant and at least nine feet horizontally from the centerline of the wastewater line. The potable waterline shall be at least two feet above the wastewater line. Whenever possible, the crossing shall be centered between the joints of the wastewater line. If the existing wastewater line is disturbed or shows signs of leaking, it shall be replaced for at least nine feet in both directions with 150 psi pressure rated pipe.

2. Where a new potable waterline crosses an existing, pressure rated wastewater line, one segment of the waterline pipe shall be centered over the wastewater line such that the joints of the waterline pipe are equidistant and at least nine feet horizontally from the centerline of the wastewater line. The potable waterline shall be at least six inches above the wastewater line. Whenever possible, the crossing shall be centered between the joints of the wastewater line. If the existing wastewater line shows signs of leaking, it shall be replaced for at least nine feet in both directions with 150 psi pressure rated pipe.

3. Where a new potable waterline crosses a new, non-pressure rated wastewater line and the standard pipe segment length of the wastewater line is at least 18 feet, one segment of the waterline

pipe shall be centered over the wastewater line such that the joints of the waterline pipe are equidistant and at least nine feet horizontally from the centerline of the wastewater line. The potable waterline shall be at least two feet above the wastewater line. Whenever possible, the crossing shall be centered between the joints of the wastewater line. The wastewater pipe shall have a minimum pipe stiffness of 115 psi at five percent deflection. The wastewater line shall be embedded in cement stabilized sand for the total length of one pipe segment plus 12 inches beyond the joint on each end.

4. Where a new potable waterline crosses a new, non-pressure rated wastewater line and a standard length of the wastewater pipe is less than 18 feet in length, the potable water pipe segment shall be centered over the wastewater line. The materials and method of installation shall conform with one of the following options:

a. Within nine feet horizontally of either side of the waterline, the wastewater pipe and joints shall be constructed with pipe material having a minimum pressure rating of 150 psi. An absolute minimum vertical separation distance of two feet shall be provided. The wastewater line shall be located below the waterline.

b. All sections of wastewater line within nine feet horizontally of the waterline shall be encased in an 18 foot or longer section of pipe. Flexible encasing pipe shall have a minimum pipe stiffness of 115 psi at five percent deflection. The encasing pipe shall be centered on the waterline and shall be at least two nominal pipe diameters larger than the wastewater line. The space around the carrier pipe shall be supported at 5 foot or less intervals with spacers or be filled to the springline with washed sand. Each end of the casing shall be sealed with water tight non-shrink cement grout or a manufactured water tight seal. An absolute minimum separation distance of six inches between the encasement pipe and the waterline shall be provided. The wastewater line shall be located below the waterline.

c. When a new waterline crosses under a wastewater line, the waterline will be encased as described for wastewater lines in paragraph (b) above or constructed of ductile iron or steel pipe with mechanical or welded joints as appropriate. An absolute minimum separation distance of

one foot between the water line and the wastewater line shall be provided. Both the waterline and wastewater line, must pass a pressure and leakage test as specified in AWWA C600 standards.

5. Where a new potable waterline crosses a new, pressure rated wastewater line, one segment of the waterline pipe shall be centered over the wastewater line such that the joints of the waterline pipe are equidistant and at least nine feet horizontally from the centerline of the wastewater line. The potable waterline shall be at least six inches above the wastewater line. Whenever possible, the crossing should be centered between the joints of the wastewater line. The wastewater pipe shall have a minimum pressure rating of 150 psi. The wastewater line shall be embedded in cement stabilized sand for the total length of one pipe segment plus 12 inches beyond the joint on each end.

6. Where cement stabilized sand bedding is required, the cement stabilized sand shall have a minimum of 10% cement per cubic yard of cement stabilized sand mixture, based on loose dry weight volume (at least 2.5 bags of cement per cubic yard of mixture). The cement stabilized sand bedding shall be a minimum of six inches above and four inches below the sewer pipe. The use of brown coloring in cement stabilized sand for wastewater line bedding is recommended for the identification of wastewater force mains during future construction.

(C) Waterline and Manhole Separation: The separation distance from a potable waterline to a manhole shall be a minimum of nine feet. Where the nine foot separation distance cannot be achieved, the potable waterline shall be encased in a joint of 150 psi pressure class pipe at least 18 feet long and two nominal sizes larger than the new conveyance. The space around the carrier pipe shall be supported at five feet intervals with spacers or be filled to the spring line with washed sand. The encasement pipe shall be centered on the crossing and both ends sealed with cement grout or manufactured seal.

(D) Location of Fire Hydrants: Fire hydrants shall not be installed within nine feet vertically or horizontally of any sanitary sewer line regardless of construction.

312.05 Pipe: Main piping materials shall be C-900 SDR-14 or upon approval C-900 SDR-18. Ductile Iron shall be used on all Fire hydrant services.

312.06 Backflow Prevention Devices: No water connection from any public drinking water supply system shall be made to any establishment where an actual or potential contamination or system hazard exists without an air gap separation between the drinking water supply and the source of potential contamination. The containment air gap is sometimes impractical and, instead, reliance must be placed on individual "internal" air gaps or mechanical backflow prevention devices. Under the conditions, additional protection shall be required at the meter in the form of a backflow prevention device (in accordance with AWWA Standards C510 and C511, and AWWA Manual M14) on those establishments handling substances deleterious or hazardous to the public health. The water purveyor need not require backflow protection at the water service entrance if an adequate cross-connection control program is in effect that includes an annual inspection and testing by a certified backflow prevention device tester. It will be the responsibility of the water purveyor to ensure that these requirements are met.

Overhead bulk water dispensing stations must be provided with an air gap between the filling outlet hose and the receiving tank to protect against back siphonage and cross-contamination.

312.07 Valves: Shall be properly spaced so that no more than one residential block or 30 customers will be without water during main repairs. For lines smaller than 10", typical spacing should be one block in high-density areas and two blocks in residential areas. All large mains, 10" and greater, should be valved off from smaller diameter mains. There will be a 3-valve system located at all fire hydrants (one of the lead and one on each side of the main where the lead is connected). There shall be 3 valves located at each tee in the main (one for each direction of the tee) and there shall be 4 valves located at each cross in the main (one for each direction of the cross).

312.08 Air Release Valves: Automatic air/vacuum release valves will be placed at all high points.

312.09 Fire Hydrants: Shall be installed at the intersection of two streets and between intersections where necessary; at distances not in excess of 300 feet between hydrants in commercial districts and 500 feet in residential areas and 1000 feet for offsite extensions where there are currently no businesses or residences. Fire hydrants shall not be installed at the end of cul-de-sacs, but rather at the beginning of the curvature of the cul-de-sac. Fire hydrants shall not be installed within nine feet vertically or horizontally of any sanitary sewer line, cleanout, or manhole regardless of construction. All pipe must be acceptable without penalty to the Texas Fire Insurance Commission for use in water works supply and distribution.

313 Design Criteria - Services

313.01 Location: Water services shall be placed at the lot corner as shown in the details at the end of this section. The Engineer shall ensure that the electric, gas, telephone and cable TV are located on the opposite lot corner from the water service.

313.02 Service Piping: Size should be one inch (1") Type K Copper for all services serving single and two inch (2") Type K Copper with sweated or compression fittings (i.e. bending a 2" Copper pipe shall not be allowed) with two-one inch services to serve two residential lots. Commercial lots shall be sized according to the land use requirements. All new residential lots with a potable water meter and an irrigation meter shall be served by a single two inch (2") tap with two-one inch services. The irrigation meter shall have backflow prevention. In cases where irrigation meters are not proposed, but the City Engineer anticipates that irrigation meters will be installed at a later date, the minimum size of the service will be increased to two inches (2").

313.03 Cover: Water Services shall have 30" of cover between the top of the service and the flowline of the street curb and gutter.

313.04 Meters: All apartment buildings, manufactured home rental communities, condominiums, and other multiple use facilities (e.g. shopping centers, office complexes, etc.), must be plumbed in such a manner as to allow for submetering of the individual dwelling or rental units and individual water meters must be installed. Water meters must be from Section 370 Standard Product List.

314 Construction Plans

314.01 General: Construction plans shall include the following:

A. Plan and profile of the proposed main.
B. Location and stationing on all water services
C. Location and stationing on all fire hydrants
D. Location and stationing of all blowoff, air release, and gate valves.
E. Standard Details
F. Horizontal scale that allows plans to be legible (or as directed by the City Engineer).
G. Sequence of construction (for water line and for all other construction in conformance with Section 101).

320 Materials For Construction

321 General

The Contractor shall furnish and install all pipe, miscellaneous pipe-fittings, valves, valve boxes, and testing in strict accordance with these specifications. All service fittings shall be suitable for use at hydrostatic working pressures up to 175 psi minimum. Testing of new water distribution system shall comply with Section 800 of the Standard Specifications.

322 Materials

All water mains shall have **metallic location tape** placed in the last 2 feet of fill of the trench (i.e. 2 feet deep from the final grade). See the details at the end of this section for more information.

322.01 Polyvinyl Chloride Water Pipe:

A. General: All polyvinyl chloride (PVC) water pipe shall be of the rigid type and must bear the National Sanitation Foundation seal of approval for potable water pipe. Pipe shall be C-900 and pressure rated at SDR-14 (200 psi), except in certain areas SDR-18 (150 psi) shall be acceptable with approval from the City Engineer.

Pipe shall have push-on, rubber gasket joints of the bell and spigot type with thickened integral bells with rubber gasket joints. Each joint of pipe shall consist of single continuous extrusion**;** bells or other components attached by solvent welding are not acceptable. The wall thickness of each pipe bell and joint coupling must be greater than the standard pipe barrel thickness. Clearance must be provided in every gasket joint for both lateral pipe deflection and for linear expansion and contraction.

B. Applicable Specifications: Except as modified or supplemented herein, PVC pipe shall meet the following standards:

1. AWWA C-900, SDR 18 or SDR 14 for PVC Pressure Pipe, 6, 8 and 12 inch nominal sizes, having Cast Iron Pipe size outside diameters.

2. Fittings used with PVC Pressure pipe shall be AWWA C-110 or AWWA C-111 mechanical joint and restraint devices (i.e. Mega Lugs).

3. All pipe must be approved by Underwriter's Laboratories for use in buried water supply and fire protection systems.

C. Material Requirements: All pipe and fittings shall be made from clean, virgin, NSF approved, Class 12454B PVC. Clean reworked materials generated from the manufacturer's own production may be used within the current limits of the referenced AWWA C-900.

D. Marking: Permanent marking on each joint of pipe shall include the following at intervals of not more than 5 feet:

1. Nominal pipe size and OD base (e.g., 4 CIPS).
2. Type of plastic material (e.g., PVC 12454B).
3. Standard Dimension Ratio and the pressure rating in psi for water at 73 °F (e.g., SDR 18, 150 psi).
4. AWWA designation with which the pipe complies (e.g., AWWA C-900).
5. Manufacturer's name or code and the National Sanitation Foundation (NSF) mark.

322.02 Ductile Iron Pipe:

A. Fire line leads and fire hydrant leads shall be ductile iron. Domestic water services shall not be supplied from fire service leads, unless the domestic and fire connections are on separately valved branches with an approved backflow prevention device in the fire service branch. All fire mains shall be constructed of ductile iron pipe Pressure Class 350 for pipe 12-inch size and smaller.

B. Iron pipe shall be ductile iron pipe meeting all requirements of standards as follows:

C. For push-on and mechanical joint pipe: AWWA C-151

D. For flanged pipe: AWWA C-115. Barrels shall have a nominal thickness required by Table 1 of AWWA C-115. Flanges shall be ductile iron (gray iron is not acceptable); they shall be as shown in ANSI/AWWA C115/A21.15 and shall conform to dimensions shown in Table 2 and Figure 1 of AWWA C115. These flanges are the same in all respects as flanges shown in ANSI/AWWA C110/A21.10 for fittings and are standard for all flanges used with pipe, valve, and equipment units in the City of Kerrville water distribution systems. Flanges shall be fabricated and attached to the pipe barrels by U.S. fabricators using flanges and pipe barrels of U.S. manufacture. If fabrication is to be by other than the pipe barrel manufacturer, a complete product submittal and approval by the Engineering Department will be required. Additionally, such fabricator

shall furnish certification that each fabricated joint has been satisfactorily tested hydrostatically at a minimum pressure of 300 psi.

E. Linings and Coating: Interior surfaces of all iron water pipe shall be cement-mortar lined and seal coated as required by AWWA C104. Interior surfaces of all iron wastewater and force main fittings shall be coated with a non-corrosive lining material acceptable to the City of Kerrville. Pipe exteriors shall be coated as required by the applicable pipe specification. The type and brand of interior lining shall be clearly marked on the outside of the pipe and fittings. Except as authorized by the Engineer, only one type and brand of pipe lining shall be used on a given project.

Except as described above for flanged pipe and where not otherwise indicated, ductile iron pipe shall be minimum Class 250 as defined by ANSI/AWWA C150/A21.50-current**;** all ductile iron pipe and flanges shall meet the following minimum physical requirements:

Grade 60-42-10:

Minimum tensile strength: 60,000 psi.

Minimum yield strength: 42,000 psi.

Minimum elongation: 10 percent.

The flanges for AWWA C115 pipe may be also be made from:

Grade 70-50-05:

Minimum tensile strength: 70,000 psi.

Minimum yield strength: 50,000 psi.

Minimum elongation: 5 percent.

F. Ductile Iron Fittings**:** Fittings shall be flanged or mechanical joint and shall meet all requirements of standards as follows:

All mechanical joints shall be fitted with mechanical joint restraint devices (i.e. Mega-Lugs).

Sizes 4 inch through 24 inch: AWWA C-110 or AWWA C-153

Sizes larger than 24 inch: AWWA C-110.

Interior surfaces of all iron water pipe fittings shall be lined with cement-mortar and seal coated as required by AWWA C104. Interior surfaces of all iron wastewater and force main fittings shall be coated with a non-corrosive lining material acceptable to the City of Kerrville. Gaskets for mechanical joints shall conform to ANSI/AWWA A21.11/C-111. Tee-head bolts, nuts and washers for mechanical joints shall be high strength, low alloy, corrosion resistant steel stock equal to "COR-TEN A" having UNC Class 2 rolled threads or alloyed ductile iron conforming to ASTM

A 536; either shall be fabricated in accordance with ANSI/AWWA A21.11/C-111.

Hex head bolts and nuts shall satisfy the chemical and mechanical requirements of ASTM A449 SAE Grade 5 cadmium plated, and shall be fabricated in accordance with ASTM B 18.2 with UNC Class 2 rolled threads.

All threaded fasteners shall be marked with a readily visible symbol cast, forged or stamped on each nut and bolt, which will identify the fastener material and grade. The producer and the supplier shall provide adequate literature to facilitate such identification; painted markings are not acceptable.

G. Polyethylene Film Wrap: All iron pipe, fittings and accessories shall be wrapped with standard 8 mil (minimum) low density polyethylene film or 4-mil (minimum) cross laminated high-density polyethylene conforming to AWWA C-105, with all edges overlapped and taped securely with duct tape to provide a continuous wrap to prevent contact between the piping and the surrounding backfill. Repair all punctures of the polyethylene, including those caused in the placement of bedding aggregates, with duct tape to restore the continuous protective wrap before backfilling.

H. Markings: Each pipe joint and fitting shall be marked as required by the applicable AWWA specification. This includes in all cases: Manufacturer's identification, Country where cast, year of casting, and "DUCTILE" or "DI".

322.03 Water Valves:

A. Description: This item shall govern the valves furnished and installed as indicated on the Drawings. Gate valves shall be either Mueller or Clow, resilient seat type, 300 psi test pressure, 200 psi working pressure, mechanical joint, with inside stem meeting AWWA C-509 specifications. Valves shall be wrapped with 8-mil polyethylene film with all edges and laps securely taped to provide a continuous wrap.

B. Materials: The Contractor shall submit descriptive information and evidence that the materials and equipment the Contractor proposes for incorporation in the Work is of the kind and quality that satisfies the specified functions and quality.

C. Samples, Inspection and Testing Requirements: All tests and inspections called for by the applicable standards shall be performed by

the manufacturer. Upon request, results of these tests shall be made available to the purchaser.

D. Other Requirements: Each submittal shall be accompanied by:

1. Complete data covering:

a. the operator, including type and size, model number, etc.,

b. the manufacturer's name and address of his nearest service facility,

c. the number of turns to fully open or close the valve.

2. Detailed instructions for calibrating the limit stops for open and closed positions, and

3. Any other information that may be necessary to operate and maintain the operator.

4. Complete dimensional data and installation instructions for the valve assembly as it is to be installed, including the operator.

5. Complete replacement parts lists and drawings, identifying every part for both the valve and operator.

322.04 Other Valves:

A. Iron-Body Gate Valves: Unless otherwise indicated, Iron Body Gate Valves, 2" to 24", including Tapping Valves, shall conform to AWWA C509, "Resilient Seated Gate Valves for Water and Sewerage Systems".

Iron Body Gate Valves larger than 24", including Tapping Valves, shall be double disc, parallel seat valves meeting the requirements of AWWA C500.

All Gate Valves larger than 12” shall be equipped with a 2” bypass that is built into the housing of the main valve (the bypass valve shall have a valve box that extends to the surface in the same manner as the main valve box).

1. Stem Seals: All valves shall have approved O-ring type stem seals. At least two O-rings shall be in contact with the valve stem where it penetrates the valve body.

2. Operation: All valves shall have non-rising stems with a 2" square operating nut in the distribution system, or with a spoke

type handwheel at pump stations when approved by the Engineer, turning clockwise to close.

3. Valve Ends: Valve ends flanged or mechanical joint, as indicated or approved.

Tapping valves shall have inlet flanges conforming to MSS SP-60, with bolt holes drilled per ANSI B16.1 Class 125. Seat rings and body casting shall be over-sized as required to accommodate full size cutters; the outlet end shall be constructed and drilled to allow the drilling machine adapter to be attached directly to the valve.

4. Gear Case: All geared valves shall have enclosed gear cases of the extended type, attached to the valve bonnet in a manner that makes it possible to replace the stem seal without disassembly and without disturbing the gears, bearing or gear lubricant. Gear cases shall be designed and fabricated with an opening to atmosphere so that water leakage past the stem seal does not enter the gear case.

B. Butterfly Valves: Unless otherwise indicated, all valves shall conform to the current "AWWA" Standard C-504, "Rubber-Seated Butterfly Valves", Class 150B, except as modified or supplemented herein.

1. Functional Requirements

a. Valves shall be the short body design and shall have flanged connections on both ends unless otherwise called for.

b. Valves shall be of such design that the valve discs will not vibrate or flutter when operated in a throttled position. Valve discs shall be secured to the shafts by means of keys or pins so arranged that the valve discs can be readily removed without damage thereto. All keys and pins used in securing valve discs to shafts shall be stainless steel or monel. Valve discs shall be stainless steel or ductile iron, ASTM A 536, Grade 65-45-12 (448-310-12); seating edge shall be stainless steel or other corrosion resistant material.

c. Valve shafts shall be constructed of wrought stainless steel or monel. The ends of the shaft shall be permanently marked to indicate the position of the disc on the shaft.

d. All buried valves shall have approved manufacturer's O-ring type. There shall be at least two O-rings in contact with the valve shaft where it penetrates the valve body.

Rubber seats located on the valve disc shall be mechanically secured with stainless steel retainer rings and fasteners.

e. Unless otherwise indicated, valves shall be provided with manual operators with vertical stems and 2 inches square operating nut turning clockwise to close and equipped with a valve disc position indicator. All keys or pins shall be stainless steel or monel. Buried valves shall have the valve stems extended or adjusted to locate the top of the operating nut no more than 24 inches below finish grade.

2. Performance Requirements

a. Unless otherwise indicated, valve operators shall be sized to seat, unseat, open and close the valve with 150 psi shutoff pressure differential across the disk and allow a flow velocity of 16 feet per second past the disc in either direction.

b. Ball valves shall be brass, bronze, stainless steel as indicated on the Drawings or Details or as approved by the Engineer.

322.05 Air-Vacuum Release Valves: Valves shall be combination air-release, air-vacuum units having small and large orifice units contained and operating within a single body or assembled unit.

The small orifice system shall automatically release small volumes of air while the pipe is operating under normal conditions. The large air-vacuum orifice system shall automatically exhaust large volumes of air while the pipe is being filled and shall permit immediate re-entry of air while being drained.

Valves shall be rated for at least 150 psi service pressure.

Material Requirements:

Valve exterior bodies and covers shall be cast iron.

Internal bushings, hinge pins, float guide and retaining screws, pins, etc., shall be stainless steel or bronze.

Orifice seats shall be Buna-N rubber.

Floats shall be stainless steel, rated at 1000 psi.

Unless otherwise indicated, these valves shall be as included in the Standard Products List.

322.06 Valve Boxes: All valves shall be equipped with adjustable valve boxes or vaults (where applicable). All valve boxes (whether in pavement or not) shall have a two foot by two foot (2' x 2') square of concrete six inches (6") thick placed around the valve box at grade. Where the valve is in pavement it shall be rotated so that the sides of the square are at a 45° angle with the curb as shown in the details at the end of this section.

322.07 Fire Hydrants: All fire hydrants shall be Mueller Super Centurion or Clow Medallion, three way hydrants and shall be installed with a six inch stub out line with a six inch valve. All valves for fire hydrant leads shall be located at the main by an anchor tee. All fire hydrants shall incorporate a 3-valve system (one of the lead and one on either side of the main at the lead). All fire hydrants shall have a four foot by four foot slab of six inch thick reinforced (wire mesh) concrete (4'x4'x6") placed just below the bury line (approximately 6 inches below the break-away nuts) to force the fire hydrant to "break-away" properly when struck by a vehicle (see details at the end of this section).

A. Applicable Specifications:

AWWA C-502 current: "AWWA Standard for Dry-Barrel Fire Hydrants".

NFPA 1963: "National (American) Standard Fire Hose Coupling Screw Thread" and City of Kerrville 5 ¼ inch (133 mm) Fire Hose Connection Standard (Available upon request from Standards Committee Secretary at 322-2806).

ANSI A-21.11 current: "American National Standard for Rubber Gasket Joints for Cast Iron and Ductile Iron Pressure Pipe and Fittings".

B. Functional Requirements:

Design Working Pressure shall be 250 psi and a test pressure of 400 psi.

Inlet shall be side connection hub end for mechanical joint (ANSI A-21.11-current). Shoe shall be rigidly designed to prevent breakage.

Lower Barrel shall be rigid to assure above ground break at traffic feature. Bury length of hydrant shall be three (3) feet minimum, five (5) feet maximum. Flange type connections between hydrant shoe, barrel sections and bonnet shall have minimum of 6 corrosion resistant bolts.

Hydrant Main Valve shall be 5 1/4 inch I.D. Valve stem design shall meet requirements of AWWA C502, with Operating Nut turning clockwise to close. Operating Nut shall be pentagonal, 1 1/2 inch point to flat at base, and 1 7/16 inches at top and 1 inch minimum height. Seat ring shall be bronze (bronze to bronze threading), and shall be removable with light weight stem wrench. Valve mechanisms shall be flushed with each operation of valve; there shall be a minimum of two (2) drain ports.

Traffic Feature shall have replaceable break-away ferrous metal stem-coupling held to stem by readily removable type 302 or 304 stainless steel fastenings. Break-away flange or frangible lugs shall be designed to assure above-ground break. Break-away or frangible bolts will not be acceptable.

Outlet Nozzles shall be located approximately 18 inches above ground. Each hydrant shall have two (2) 2 1/2 inch nozzles 180 degrees apart with National (American) Standard Fire Hose Coupling Screw Thread NFPA 1963 and one (1) 5 ¼ inch pumper nozzle. Nozzles shall be threaded or cam-locked, O-ring sealed, and shall have type 302 or 304 stainless steel locking devices. Nozzle caps and cap gaskets shall be furnished on the hydrant. The cap nut shall have the same configuration as the operating nut.

Hydrants shall be Dry-Top Construction, factory lubricated oil or grease with the lubricant plug readily accessible. The system shall be described for City approval.

Hydrant shall have double O-ring seals in a bronze stem sheath housing to assure separation of lubricant from water and shall have a weather cap or seal, or both, as approved by the Owner, to provide complete weather protection.

C. Material Requirements: All below ground bolts shall be corrosion resistant. The hydrant valve shall be Neoprene, 90 durometer minimum. The seat ring, drain ring, operating nut and nozzles shall be bronze, AWWA C-502 current, containing not over 16 percent zinc. Break-away stem coupling shall be of ferrous material; its retaining pins, bolts, nuts, etc. of type 302 or 304 stainless steel.

Coatings shall be durable and applied to clean surfaces. The coating shall be applied according to coating manufacturer's specifications. Other exposed ferrous metal shall receive asphalt-based varnish, or approved equal, applied according to the coating manufacturer's specifications.

322.08 Copper Tubing: All copper service tubing shall be annealed seamless Type K water tube meeting ASTM B88 and rated at 150 psi working pressure. The

tubing shall be homogenous throughout and free from cracks, holes, crimping, foreign inclusions or other defects. It shall be uniform in density and other physical properties.

Nominal Tube Size, inches	Outside Diameter, inches		Wall Thickness, inches	
	Average	Tolerance	Average	Tolerance
1	1.125	± 0.0035	0.065	± 0.0045
2	2.125	± 0.005	0.083	± 0.007

322.09 Water Service Connection Fittings:

A. Brass Goods: All brass valves, couplings, bends, connections, nipples and miscellaneous brass pipe fittings and accessories used in meter connections, service lines, air release piping assemblies, and wherever needed in the water distribution system, shall conform to the City of Kerrville Standards and AWWA C-800, except as herein modified or supplemented.

Unless otherwise noted, the goods described herein shall be fabricated of standard Red Brass (Waterworks Brass) meeting ASTM B62 or B584, alloy 83600, consisting of 85 percent copper and 5 percent each of tin, lead and zinc.

Exposed threads shall be covered with plastic caps or sheeting to protect the threads.

Brass goods of each type and class shall be compatible with other fittings in common usage for similar purposes. Where not otherwise indicated, all such materials shall meet the following requirements:

For 3/4” and 1” sizes only, corporation valve inlet threads, and the internal threads of saddles shall be the AWWA CC taper thread conforming to AWWA C800. External threads of corporation valve inlet must be compatible with internal threads of the service saddle.

For 2” and larger services, inlet threads of corporation valves shall be AWWA (IP) thread (male); outlets of service saddles shall be tapped with AWWA IP thread (female); the service shall be equipped with a gate valve at the main. Two inch (2”) Type K Copper shall be installed with sweated or compression fittings (i.e. bending the pipe shall not be allowed).

Connections of all new tubing, and of tubing repairs wherever possible, shall be by compression connections for ¾” to 2” copper. Shall be designed to provide a seal and to retain the tubing, without slippage, at a working water pressure of 100 psig minimum.

Brass pipe shall conform to the weights and dimensions for Extra Strong pipe given in Table A.2 of AWWA C800.

B. Valve / Water Meter Boxes:

1. Each valve box installed shall be of cast iron material and designated with H20 load capacity or greater and be of the extension type. This requirement does apply to valves placed outside of the traffic area.

2. Residential Water Meter Boxes can be cast iron or plastic with a cast iron lid. Residential Valve Boxes can be plastic or cast iron.

3. Commercial Water Meter Boxes shall be cast iron or steel and approved for the application.

C. Tapping sleeves shall be of all stainless steel construction, with a full wrap around gasket. It shall have a pressure test port mounted on the side of the stem with NPT threads and a stainless steel plug.

D. All services shall be connected to the main with a saddle (i.e. direct taps are not permitted).

323 Acceptance Testing

323.01 Flushing and Testing of Water Mains: Flushing and Disinfection of mains shall comply with AWWA C651. Testing shall comply with Section 800 of the City of Kerrville Standard Specifications.

324 Construction Methods

324.01 Installation: Installation shall comply with Section 600 of the City of Kerrville Standard Specifications.

325 Payment

325.01 Pipe for Mains: Pipe mains shall be paid for at the unit bid price for various diameters of pipe main; per linear foot as set out in the Bid Proposal and shall include all materials and labor to place the water main.

325.02 Miscellaneous Iron Fittings: There shall be no direct payment for mechanical joint cast iron fittings, which shall be considered incidental to the bid price for various types and sizes of pipe mains.

325.03 Gate Valves: Gate valves shall be paid for at the unit bid price for various sizes of gate valves with cast iron boxes set out in the Bid Proposal and these specifications in which price shall include furnishing and installing.

325.04 Valve Boxes: There shall be no direct payment for valve boxes, which shall be considered incidental to the respective bid prices for various types and sizes of gate valves.

325.05 Flushing, Testing, and Disinfection: There shall be no direct payment for flushing, testing, and disinfection of water mains, which shall be considered incidental to various types and sizes of pipe mains.

325.06 Disputes: In the event of disputes regarding quantities the inspector's ruling shall prevail.

370 Standard Products List

370.01 Piping

DUCTILE IRON PIPE MANUFACTURER	TYPE	SIZES
U.S. PIPE	SLIP JOINT, M.J., & FLANGED	3" AND UP
TYLER PIPE		
GRIFFIN PIPE		
AMERICAN DUCTILE IRON PIPE		
McWANE		
RIVER CROSSING & CREEK CROSSING		
U.S. PIPE - ONLY	USIFLEX	4" AND UP
P.V.C. C-900 DR-14, DR18, DR25 MANUFACTURER	**TYPE**	**SIZES**
J-M PIPE	SLIP	4" AND UP
CERTAINTED		
NORTH AMERICAN PIPE		
CAN-TEX		

370.02 Valves

MUELLER VALVES		
PRODUCT	**PARTS NUMBER**	**SIZES**
GATE VALVE M.J. TO M.J.	A-2360-20	2" THRU 12", 14", 18", 20", 24"
RESILIENT WEDGE	A-2361-20	16"
GATE VALVE FLANGE TO FLANGE	A-2361-16	16"
RESILIENT WEDGE	A-2360-6	2" THRU 12", 14", 18", 20", 24"
GATE VALVE FLANGE TO M.J.	A-2360-16	4" THRU 24" (NOT 16")
RESILIENT WEDGE	A-2361-16	16"
GATE VALVE I.P.T.	A-2360-8	2"
RESILIENT WEDGE		
GATE VALVE TAPPING	A-2360-16	4" THRU 24" (NOT 16")
RESILIENT WEDGE FLANGE TO M.J.	A-2361-16	16"

CLOW VALVES		
PRODUCT	**PARTS NUMBER**	**SIZES**
GATE VALVE M.J. TO M.J. RESILIENT WEDGE	F-6100	2" - 24" (EXCEPT 2 1/2")
GATE VALVE FLANGE TO FLANGE RESILIENT WEDGE	F-6102	2" - 24"
GATE VALVE FLANGE TO M.J. RESILIENT WEDGE	F-6106	3" - 24"
GATE VALVE TAPPING RESILIENT WEDGE FLANGE TO M.J.	F-6114	4' - 24"
GATE VALVE I.P.T. RESILIENT WEDGE	F-6103	2"

CLA-VAL™

MODEL 90-01 / 690-01

2" – 24"

Pressure Reducing Valve

- **Sensitive and Accurate Pressure Control**
- **Easy Adjustment and Maintenance**
- **Tamper Resistant**
- **Optional Check Feature**
- **Fully Supported Frictionless Diaphragm**

The Cla-Val Model 90-01/690-01 Pressure Reducing Valve automatically reduces a higher inlet pressure to a steady lower downstream pressure regardless of changing flow rate and/or varying inlet pressure. This valve is an accurate, pilot-operated regulator capable of holding downstream pressure to a pre-determined limit. When downstream pressure exceeds the pressure setting of the control pilot, the main valve and pilot valve close drip tight.

If a check feature is added, and a pressure reversal occurs, the downstream pressure is admitted in the main valve cover chamber closing the valve to prevent return flow.

Schematic Diagram

Item	Description
1	Hytrol (Main Valve)
2	X58 Restriction Fitting
3	CRD Pressure Reducing Control

Optional Features

Item	Description
A	X46A Flow Clean Strainer
B	CK2 Cock (Isolation Valve)
C	CV Flow Control (Closing)*
D	Check Valves with Cock
H	Solenoid Drain To Atmosphere
S	CV Flow Control (Opening)
Y	X43 "Y" Strainer

*The closing speed control (optional) on this valve should always be open at least three (3) turns off its seat.

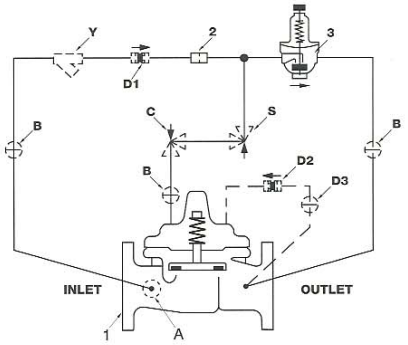

The "D" feature on a vertically installed 6" and larger valve must be horizonally oriented.

Typical Applications

Typical pressure reducing valve station using Model 90-01AB/690-01AB and Model 90-01AS/690-01AS in parallel to handle wide range of flow rates. Larger Model 90-01AB/690-01AB valve takes care of peak loads and smaller Model 90-01AS/690-01AS handles low flows.

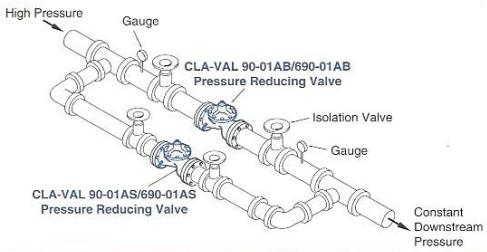

The 90-01D/690-01D Combination Pressure Reducing and Check Valve is installed downstream of a pump where a constant system pressure is required. The check feature is to prevent reverse flow through the pump and to hold system pressure when the pump is off.

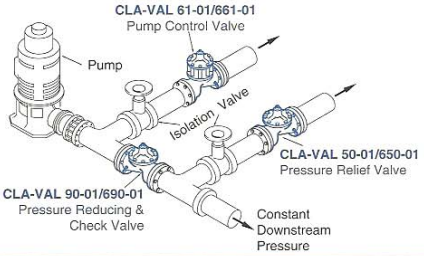

370.03 Air Release Valves

MANUFACTOR	PARTS NUMBER-SERIES	SIZES
APCO	140 SERIES	1/2" THRU 3"
APCO	140-C SERIES	4" & UP

370.04 Back-Flow Prevention

	R.P.Z.	
MANUFACTURER	**SERIES**	**SIZES**
WILKINS	975XLSE	3/4" THRU 2"
AMES	4000SS	4" THRU 10"
	SWING CHECK	
MANUFACTURER	**SERIES**	**SIZES**
MUELLER	A-2606-01	4" THRU 16"

370.05 Fire Hydrants

PRODUCT	PARTS NUMBER	SIZES
MUELLER SUPER CENTURION 250	A-423	6"
CLOW MEDALLION	F-2545	6"

370.06 Boxes

VALVE BOX MANUFACTURER	SERIES	
TYLER/UNION	6850	ADJUSTABLE
EAST JORDON IRON WORKS	# 4905	ADJUSTABLE
EAST JORDAN IRON WORKS	#3126000	ADJUSTABLE
1" W/S METER BOX MANUFACTURER	**SERIES**	
EAST JORDON IRON WORKS	# 15 - # 32515000	PLASTIC BOTTOM-C.I. TOP
EAST JORDAN IRON WORKS	#001 - 2570000	C.I. BOTTOM AND TOP

MANUFACTURER	SERIES	SIZE
KERR COUNTY WELDING	2" METERS	2' X 3' X 1.5' METAL BOX
DALWORTH QUICKSET	#305-01- FOR \ METERS 4" & 6"	3' X 5' X 3" CONCRETE VAULT H-20 TRAFFIC FRAME, COVER
CAPITAL PRECAST	METERS 4" AND 6"	SAME AS ABOVE

370.07 Meters

MANUFACTURER	SERIES	SIZE
SENSUS	SRH COUMPOUND SCREEN # SM-951-R1	2" THRU 6"
SENSUS	TURBO-DRS	2" thru 8"
	W-100 DRS	2"
	W-1000 DRS	4"
	W-2000 DRS	6"
	W-3500 DRS	8"

370.08 Miscellaneous

MUELLER PRODUCTS		
PRODUCT	**PARTS NUMBER**	**SIZES**
SERVICE FITTINGS		
CORPORATIONS	B-25008	1" & 2"
ANGLE CURB STOP	B-24258	1"
STRAIGHT CUT OFF	B-24350	1"
UNION	H-15403	1" & 2"
M.I.P.	H-15428	1" & 2"
F.I.P.	H-15451	1' & 2"
FLARE TO COMP.	H-15071	1"
METER SWIVEL	H-10890	1"
METER BUSHING	H-10889	1" X 3/4"
METER BUSHNG	H-10888	3/4" X 5/8"
BRASS PLUG	H-10033	1" & 2"
90 DEGREE BEND	H-15209	1" & 2"
CORPORATIONS	B-2996	2" P.V.C. SERVICES
Y-BRANCH	H-15343	2" X 1"

OTHER PRODUCTS		
PRODUCT	**PARTS NUMBER**	**SIZES**
TAPPING SLEEVES		
SMITH-BLAIR	662 & 663 SERIES	ALL
MUELLER	304L SERIES	ALL
TAPPING SADDLES		
SMITH-BLAIR	313 SERIES	ALL
RESTRAINTS -GLANDS		
MEGA LUGS-EBAA	1100 & 2000 SERIES	ALL
UNIFLANGES	1400 & 1500 SERIES	ALL
FULL CIRCLE CLAMPS		
SMITH-BLAIR	226 OR- 227	ALL
BOLTED COUPLINGS		
SMITH-BLAIR	441, 442, & 461 SERIES	ALL
POWER SEAL	3506 SERIES	ALL
M.J FITTINGS		
TYLER/UNION	M.J. CLASS 350	OR EQUAL -ALL

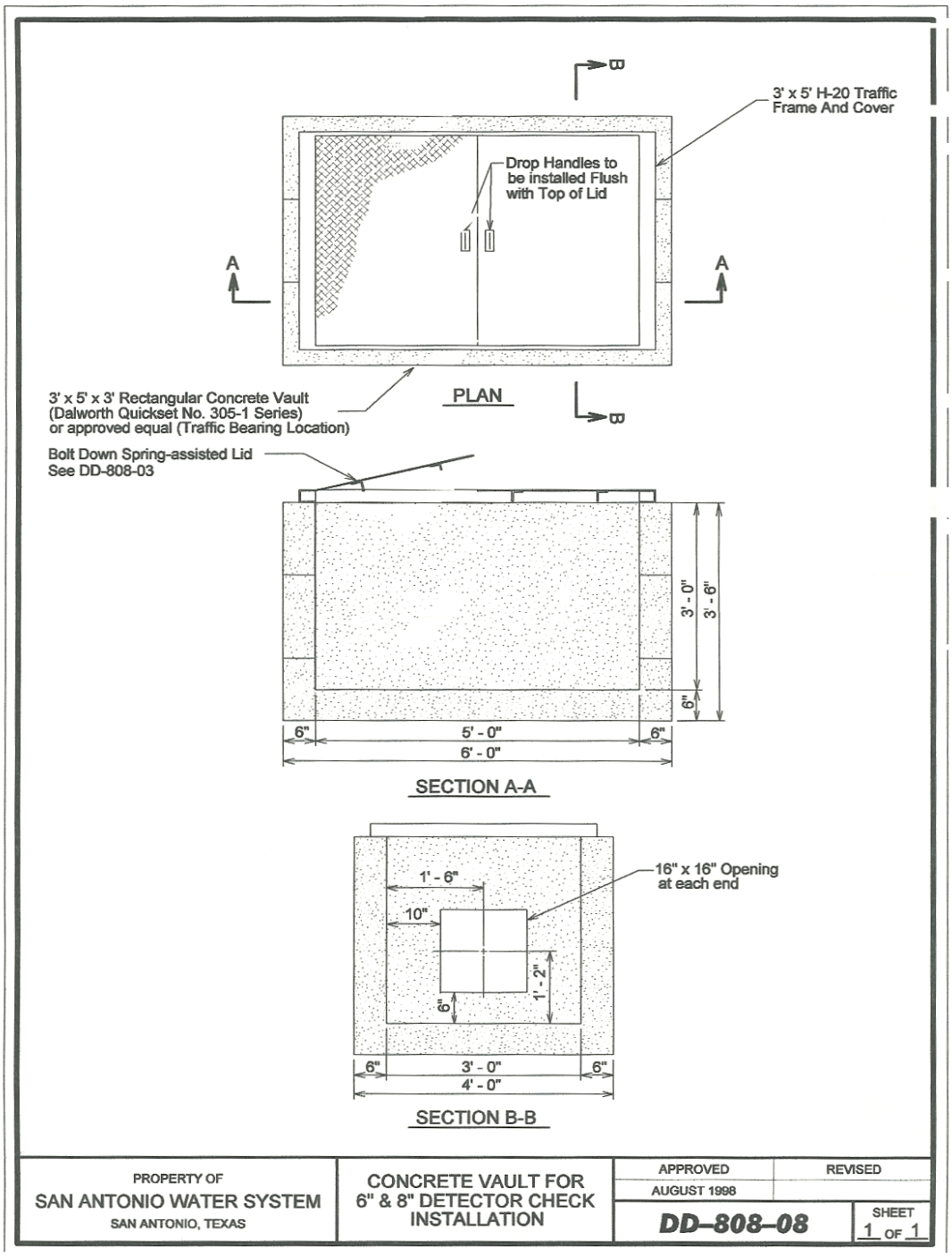
B
3' x 5' H-20 Traffic Frame And Cover
Drop Handles to be installed Flush with Top of Lid
A
A
3' x 5' x 3' Rectangular Concrete Vault (Dalworth Quickset No. 305-1 Series) or approved equal (Traffic Bearing Location)
PLAN
B
Bolt Down Spring-assisted Lid See DD-808-03
3' - 0"
3' - 6"
6"
6"
5' - 0"
6"
6' - 0"
SECTION A-A
16" x 16" Opening at each end
1' - 6"
10"
1' - 2"
6"
6"
3' - 0"
6"
4' - 0"
SECTION B-B
PROPERTY OF
SAN ANTONIO WATER SYSTEM
SAN ANTONIO, TEXAS
CONCRETE VAULT FOR 6" & 8" DETECTOR CHECK INSTALLATION
APPROVED
AUGUST 1998
REVISED
DD–808–08
SHEET 1 OF 1

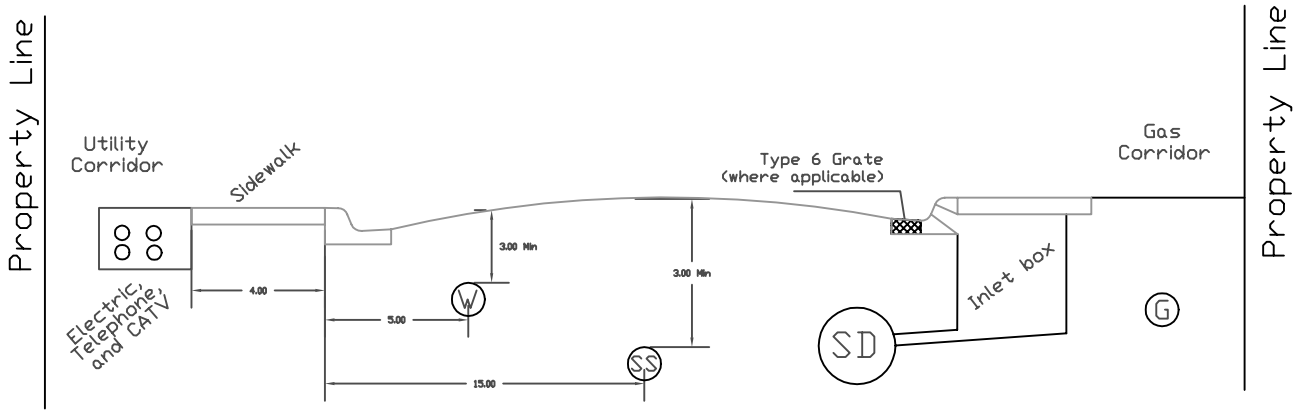

UTILITY CORRIDOR LAYOUT

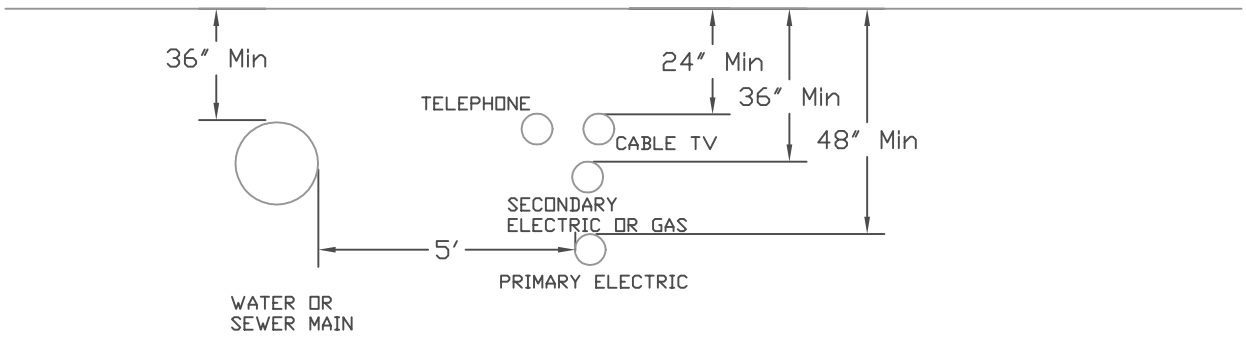

WHERE UTILITIES ARE PARALLEL TO WATER MAIN

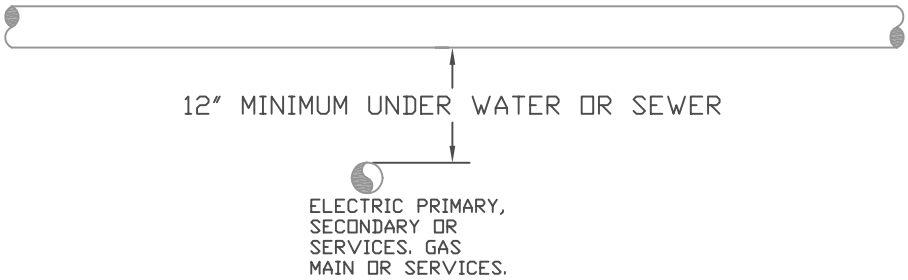

WHERE ELECTRIC OR GAS CROSS WATER MAIN, WATER SERVICE, OR HYDRANT LEAD

NOTE:
ELECTRIC OR GAS SHALL BE PLACED A MINIMUM OF 1 FOOT BELOW SHALLOW SEWER MAINS OR SEWER SERVICES THAT ARE 48" OR LESS IN DEPTH.

Utility Corridor Layout Details			
City of Kerrville Standard Specifications			
SIZE	FSCM NO.	DWG NO. 380.01	REV
SCALE		SHEET	

Typical Water And Sewer Service Line Locations

(For Single Water Service)

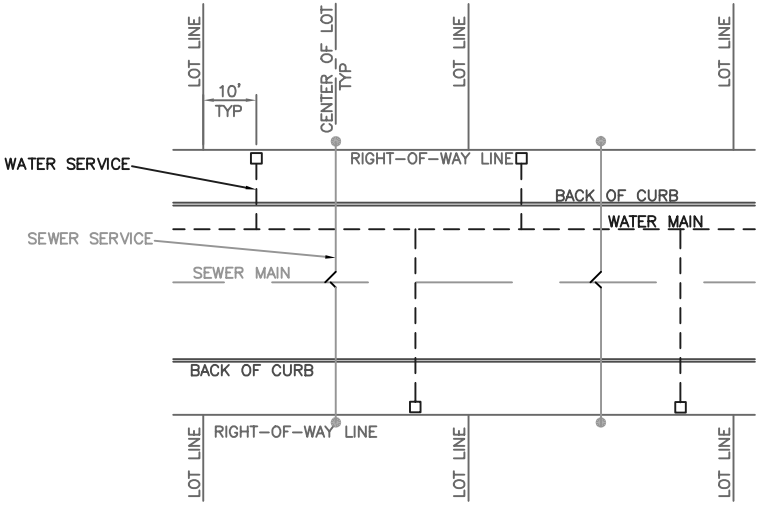

(For Double Water Service)

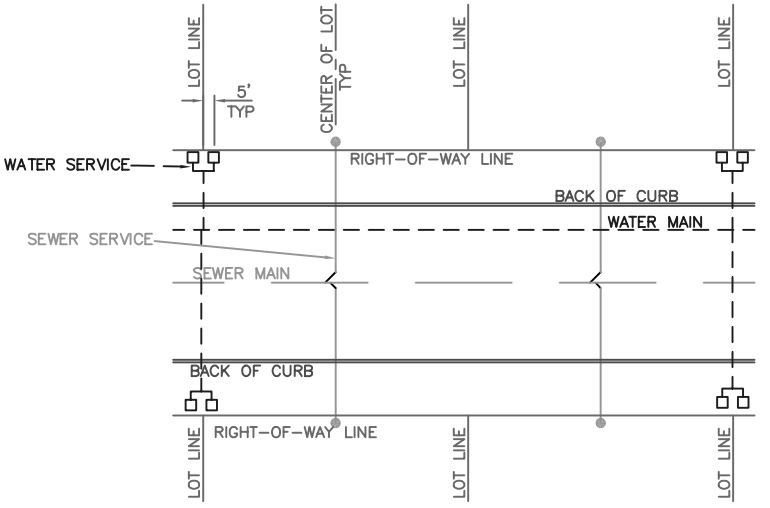

NOTE: SEE TYPICAL WATER AND SEWER SERVICE DETAILS

Lot Frontage Detail			
City of Kerrville Standard Specifications			
SIZE	FSCM NO.	DWG NO. 380.02	REV
SCALE		SHEET	

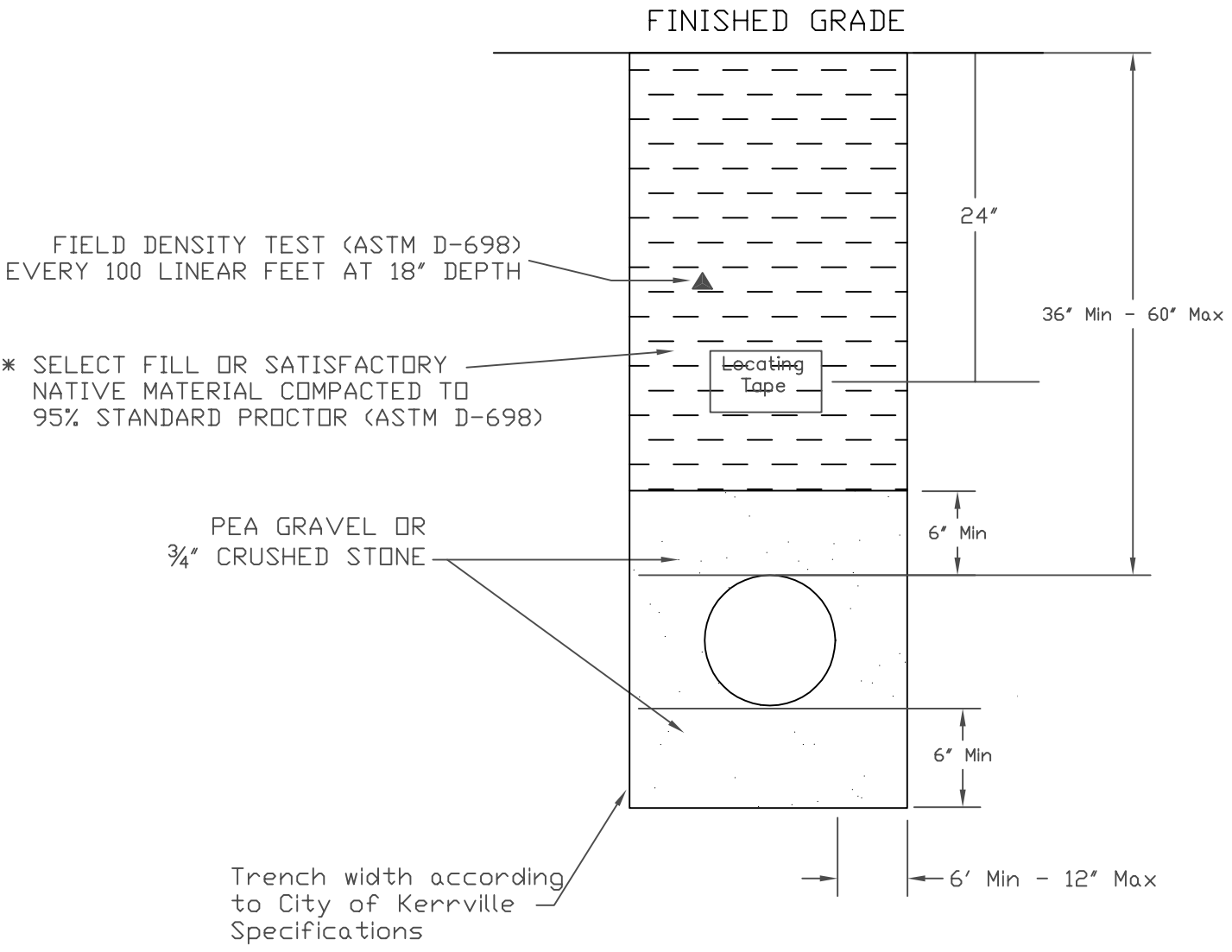

NOTES:

* MOISTURE SENSITIVE MATERIAL COMPACTED TO 95% STANDARD PROCTOR AND WITHIN 3% (+/-) OF OPTIMUM MOISTURE CONTENT MAY BE USED WHERE WATER LINE IS NOT UNDERNEATH PAVEMENT.

▲ REPRESENTS FIELD DENSITY TEST LOCATION

INSTALLATION OF PIPE TO FOLLOW CITY OF KERRVILLE SUBDIVISION SPECIFICATIONS

Water Line Embedment & Field Density Testing			
City of Kerrville Standard Specifications			
SIZE	FSCM NO.	DWG NO. 380.03	REV
SCALE		SHEET	

THRUST BLOCKING NOTES

1. THRUST BLOCKING SHALL BE PLACED AGAINST UNDISTURBED SOIL.

2. CONCRETE THRUST BLOCKING SHALL BE PROVIDED WHERE CHANGES IN DIRECTION OCCURS, AT TEES, BENDS, CROSSES, CHANGES IN SIZES, STOPS(DEAD ENDS), VALVES, AND OR AS SHOWN BELOW.

3. CONTRACTOR SHALL USE THE FOLLOWING TABLE OF DIMENSIONS FOR THRUST BLOCKING AREA.

THRUST BLOCK SCHEDULE

PIPE SIZE	A PLUGS& TEES	B 90° B	C 45° B	D GATE VALVES
4" OR 6"	1'0"	1–2"	1–2"	1'0"
8"	1'3"	1–6"	1–6"	1'0"
12"	2'8"	3'0"	2'3"	1'0"
16" & Larger	3'8"	4'0"	3'0"	2'0"

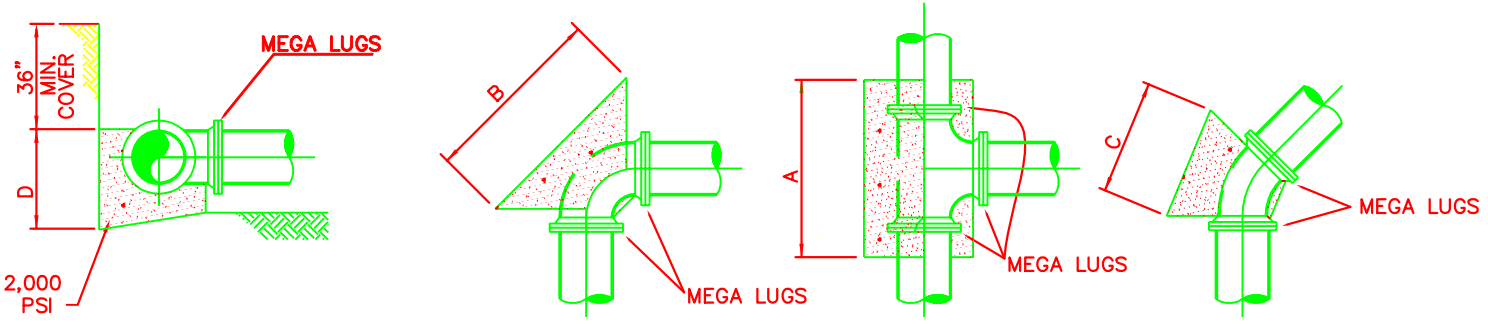

ALL FITTINGS

90° BENDS

TEE

ALL OTHER BENDS

THRUST BLOCK DETAILS

SCALE : NONE

MEGA LUGS

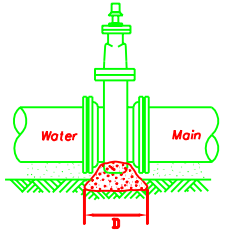

Thrust Blocking Detail			
City of Kerrville Standard Specifications			
SIZE	FSCM NO.	DWG NO. 380.04	REV
SCALE		SHEET	

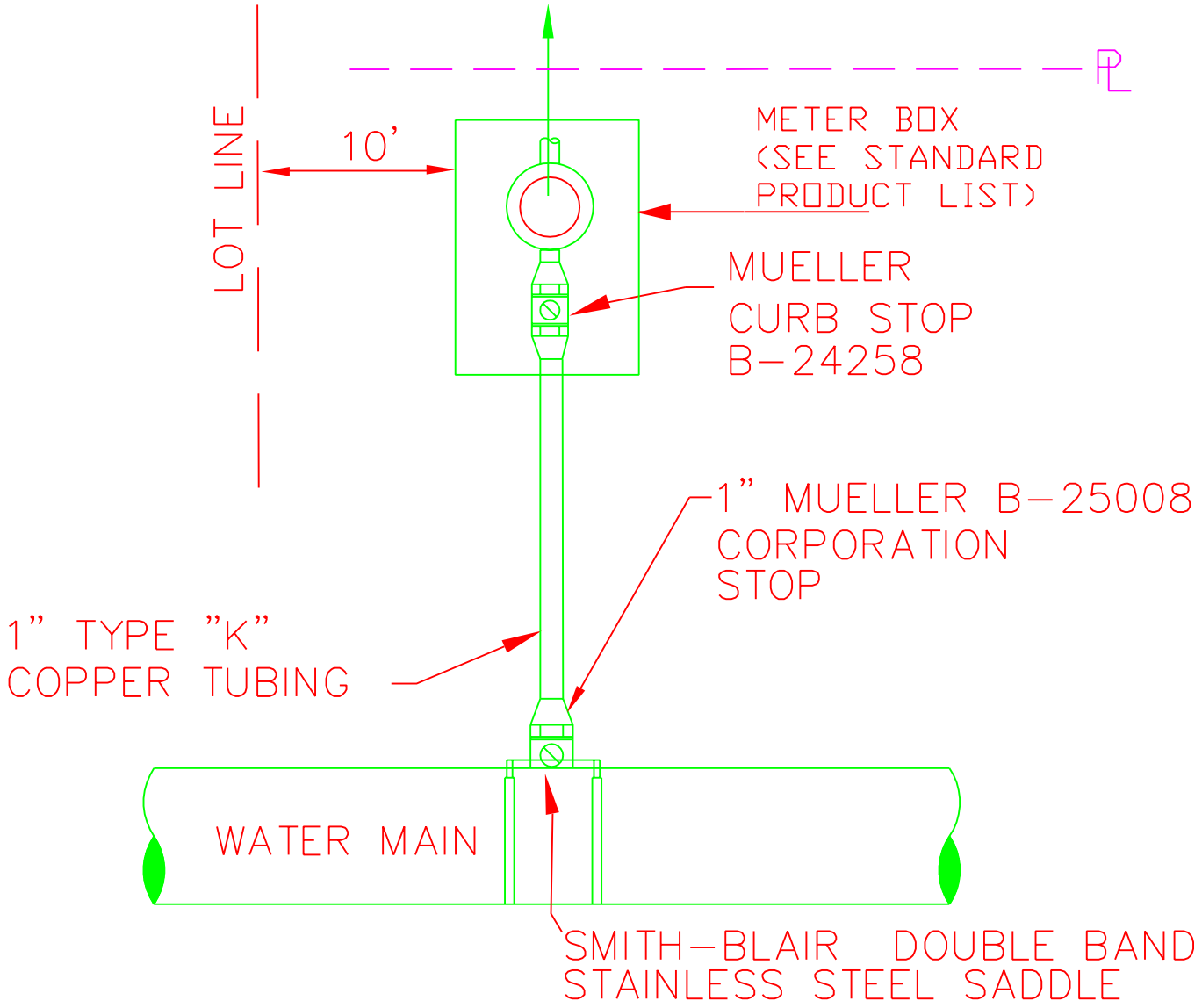

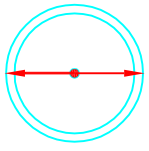

NOTE:

TAPS MUST BE IN EITHER THE 3:00 OR 9:00 O'CLOCK POSITION. NO TAPS WILL BE ALLOWED IN OTHER POSITIONS OF THE PIPE.

Single Water Service Detail

City of Kerrville
Standard Specifications

SIZE	FSCM NO.	DWG NO.	REV
		380.05	
SCALE		SHEET	

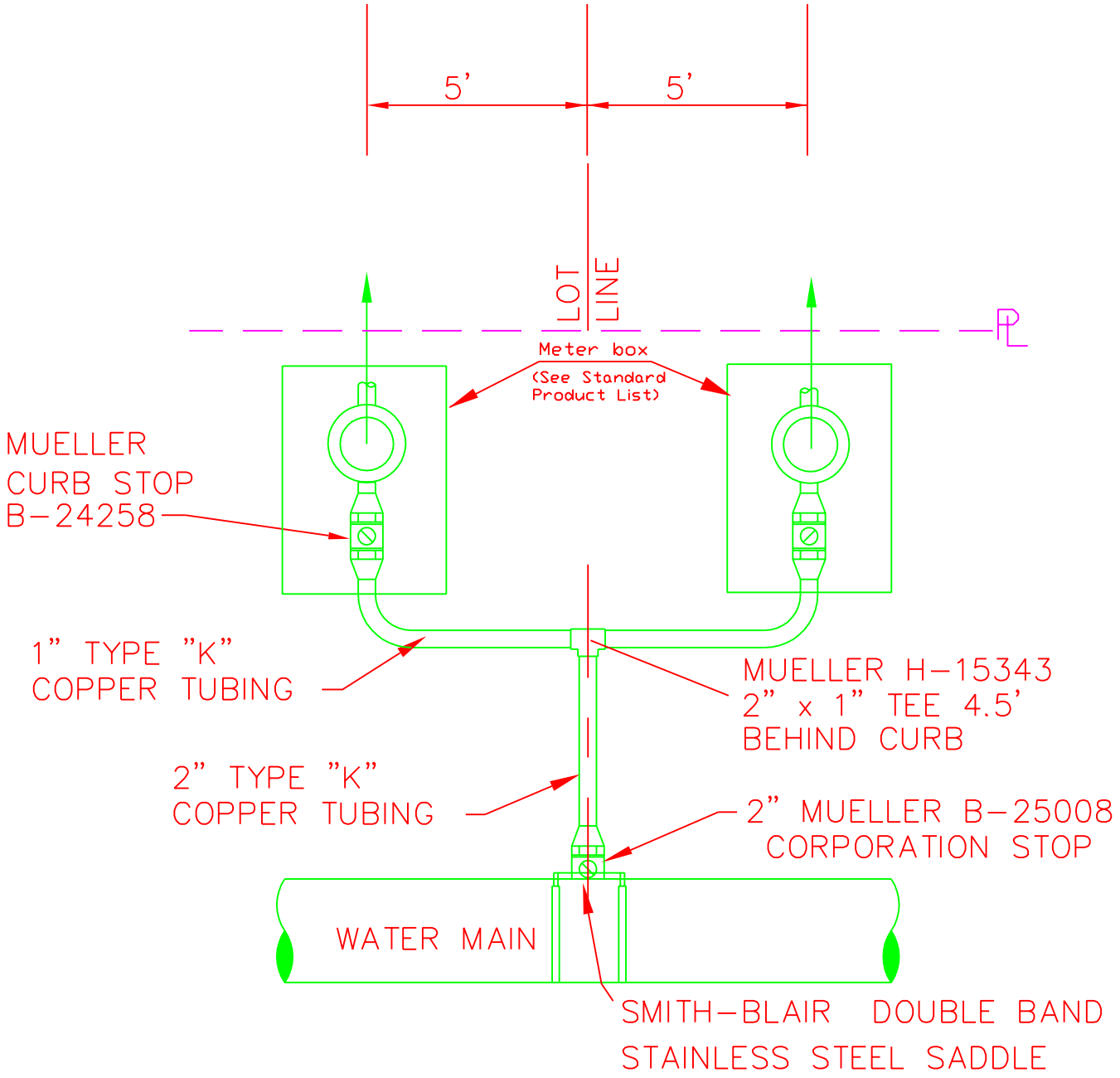

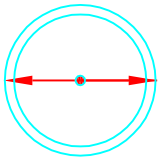

NOTE:
TAPS MUST BE IN EITHER THE 3:00 OR 8:00 O'CLOCK POSITION. NO TAPS WILL BE ALLOWED IN OTHER POSITIONS OF THE PIPE.

Double Water Service Detail

City of Kerrville
Standard Specifications

SIZE	FSCM NO.	DWG NO.	REV
		380.06	
SCALE		SHEET	

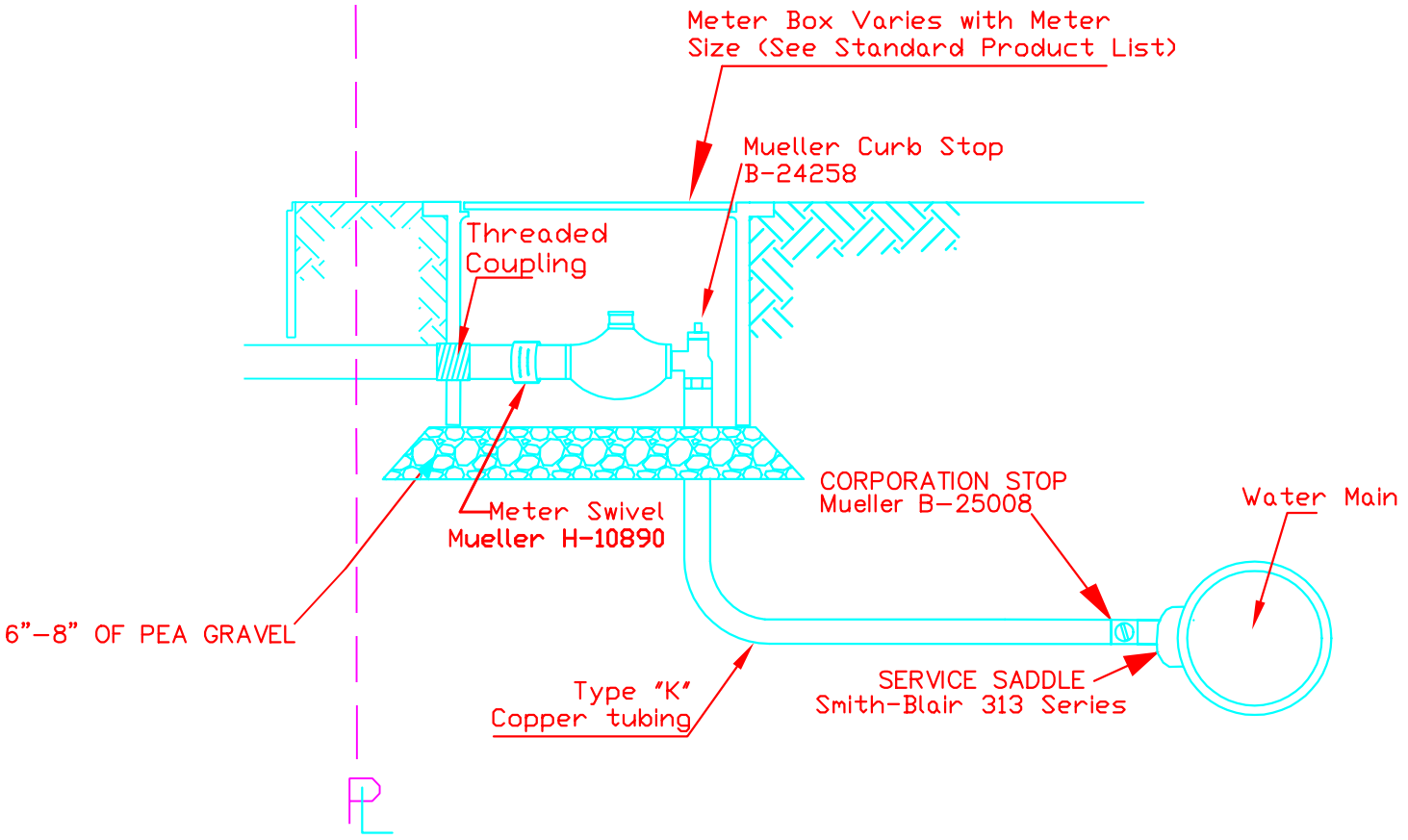

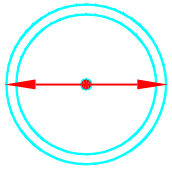

NOTE:

TAPS MUST BE IN EITHER THE 3:00 OR 9:00 O'CLOCK POSITION. NO TAPS WILL BE ALLOWED IN OTHER POSITIONS OF THE PIPE.

City of Kerrville

Standard Specifications

Water Service Meter Box Detail

SCALE		DRAWING NO.	380.07

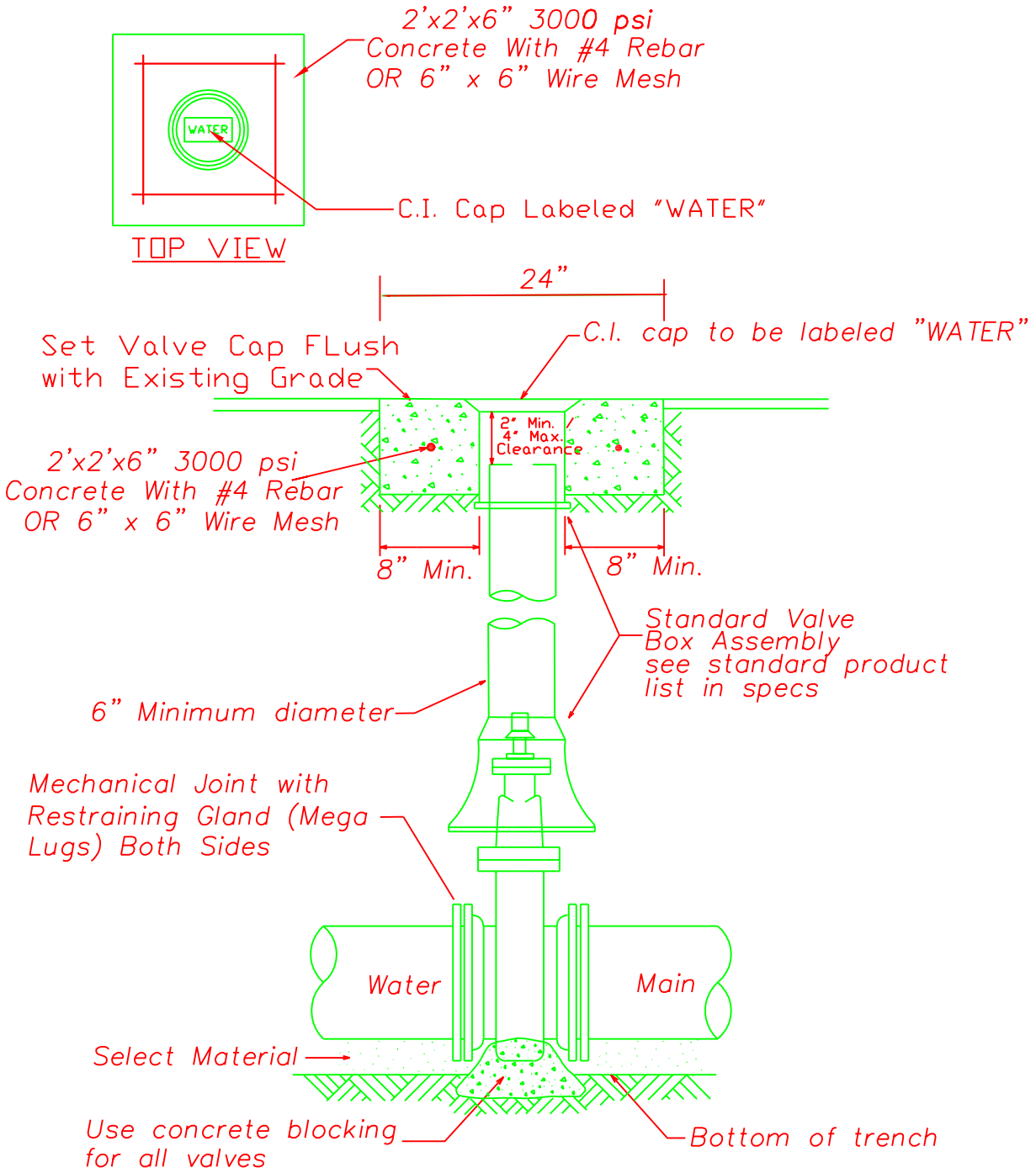

NOTE: ALL FLUSHING AND GATE VALVES TO BE AWWA STANDARD COUNTERCLOCKWISE OPENING WITH RESILIENT SEATS.

OPERATING NUT EXTENSION REQUIRED
IF TOP OF NUT IS GREATER THAN 5 FT DEEP
(SEE DETAIL FOR VALVE NUT EXTENSION)

Gate Valve Detail

City of Kerrville
Standard Specifications

SIZE	FSCM NO.	DWG NO.	REV
		380.08	
SCALE		SHEET	

NOTE: WATER MAINS DEEPER THAN THAT ALLOWED BY THE CITY OF KERRVILLE SPECIFICATIONS WILL REQUIRES SPECIAL WRITTEN PERMISSION FROM THE CITY ENGINEER.

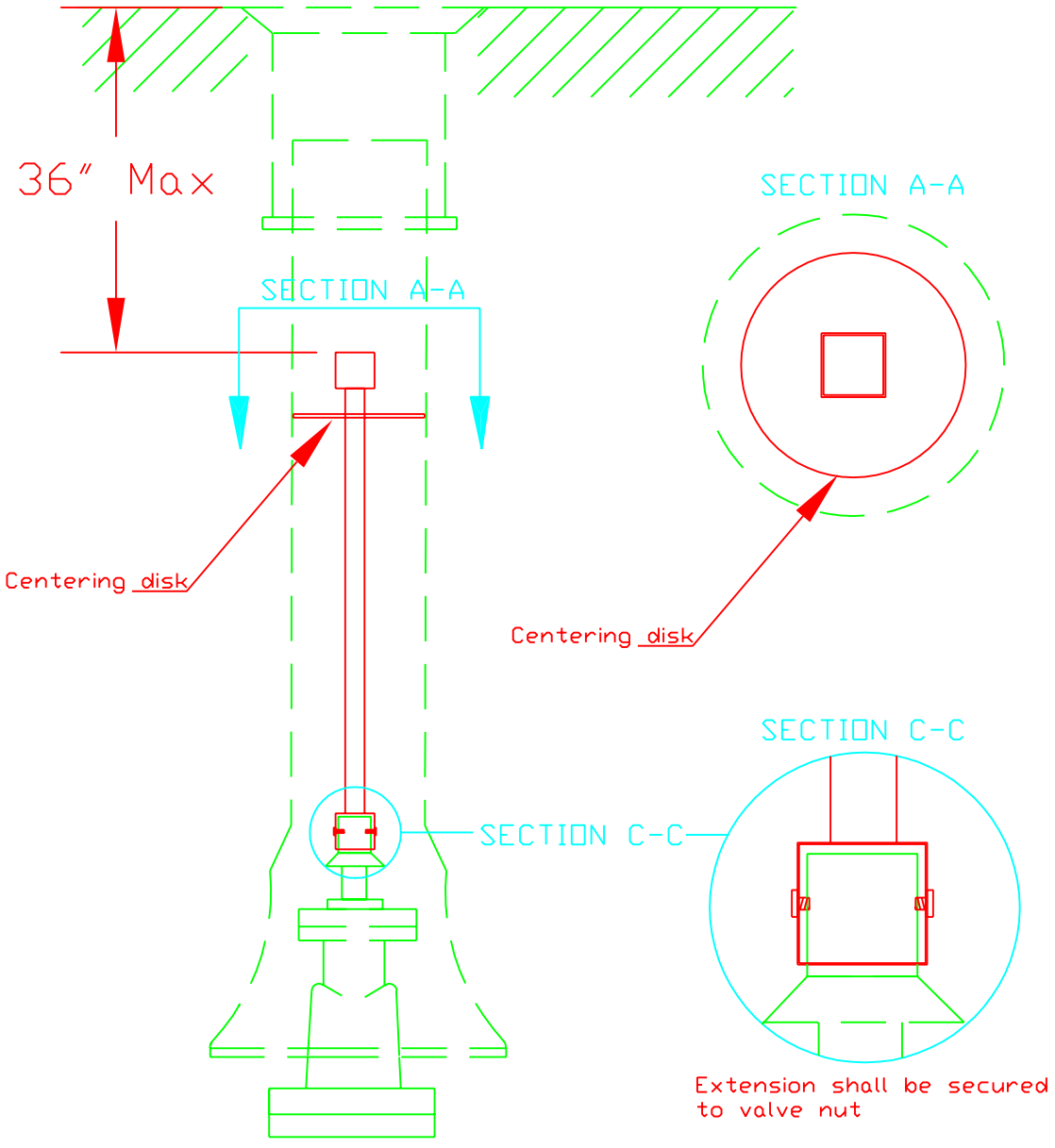

Valve Extension Details

City of Kerrville

Standard Specifications

SIZE	FSCM NO.	DWG NO.	REV
		380.09	

SCALE		SHEET

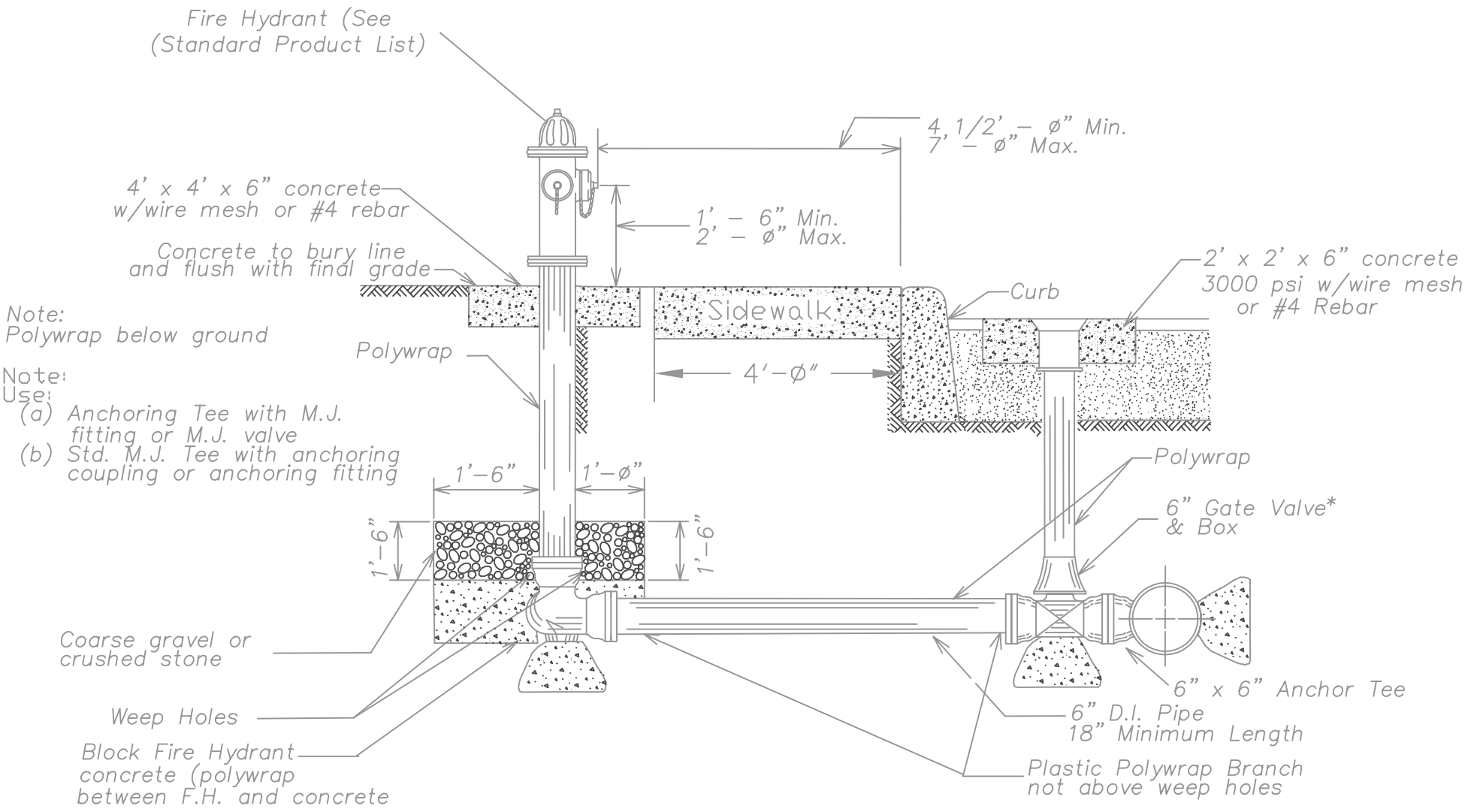

Fire Hydrant Detail

City of Kerrville

Standard Specifications

SIZE	FSCM NO.	DWG NO.	REV
		380.10	
SCALE		SHEET	

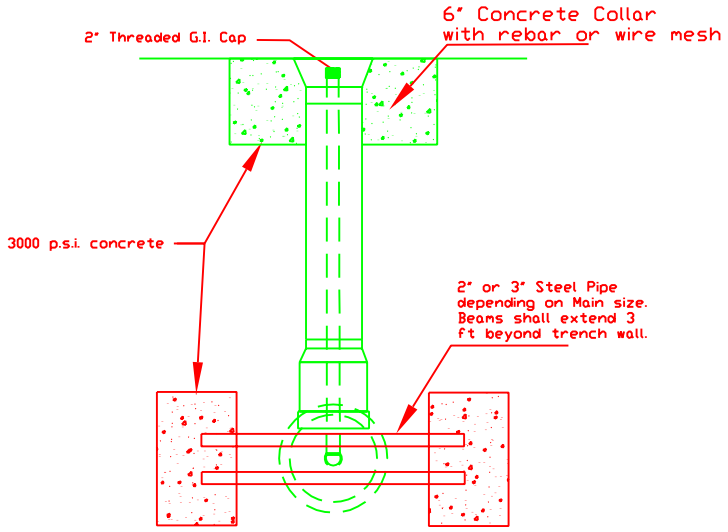

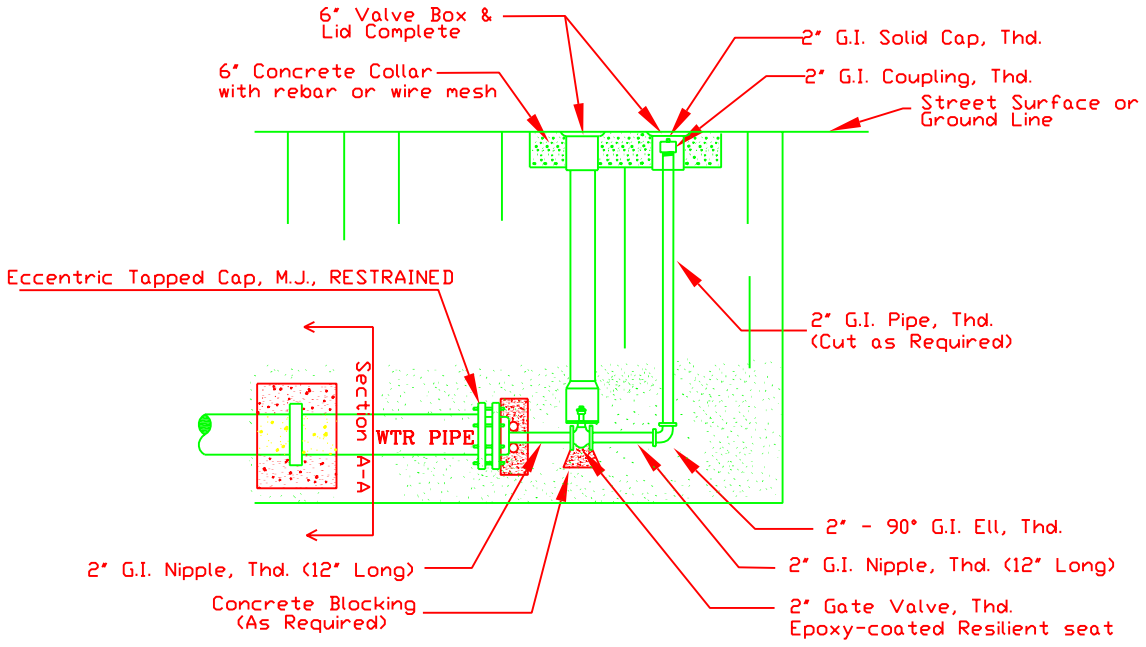

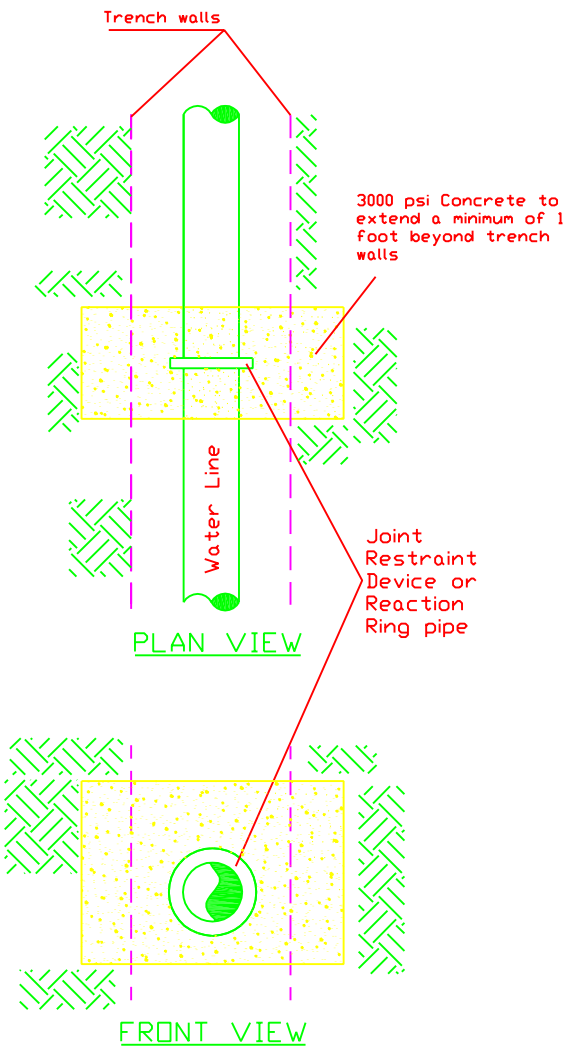

SECTION A-A

NOTE:

POLYWRAP ALL PIPING AND FITTINGS REQUIRING CONCRETE.

Blow-off Detail

City of Kerrville
Standard Specifications

SIZE	FSCM NO.	DWG NO.	380.11
SCALE			SHEET

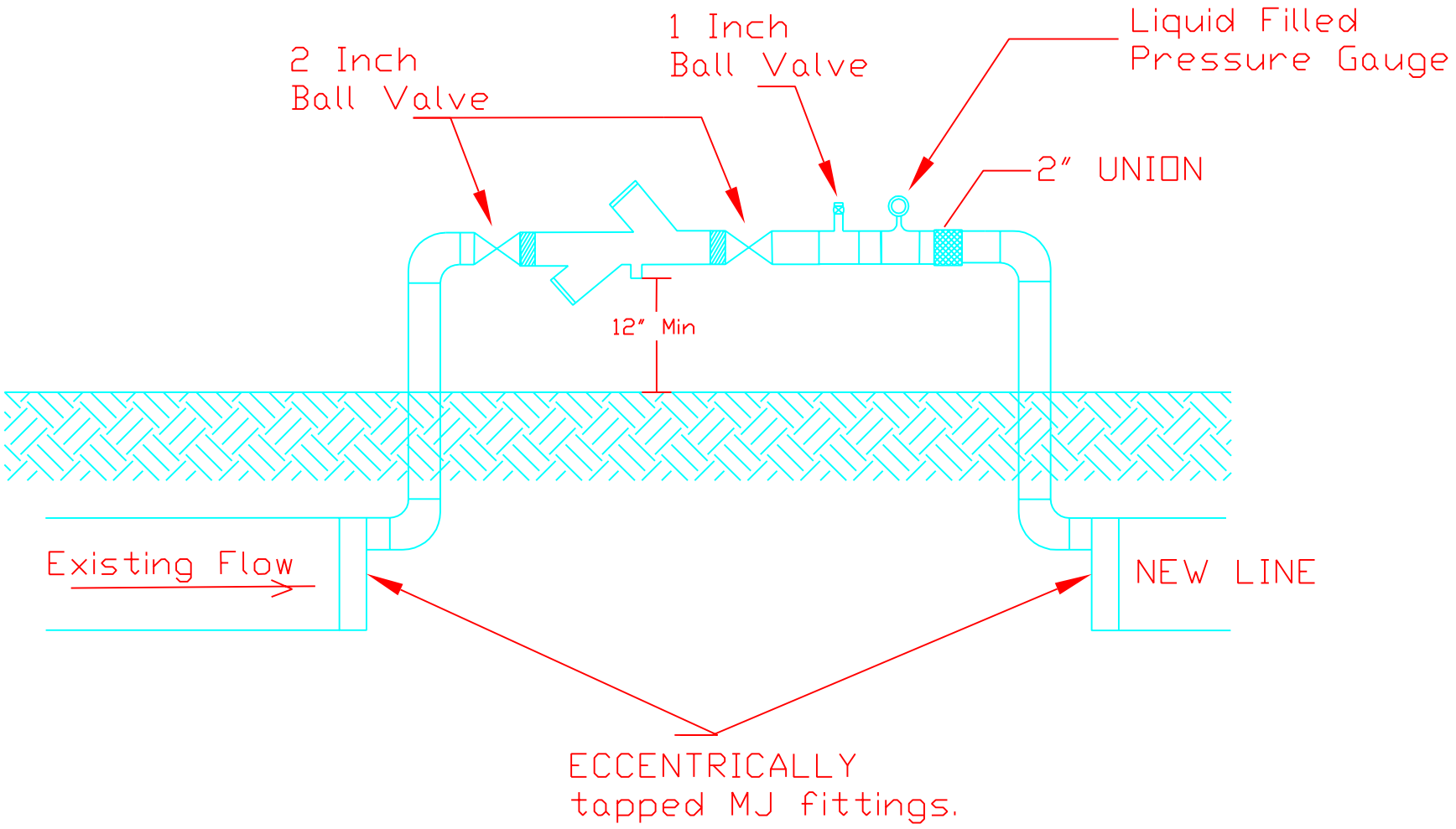

NOTES:

1. All piping configurations of the Backflow Assembly shall be done with Galvanized pipe.
2. BACKFLOW PREVENTION DEVICE (R.P.Z.) designated by City of Kerrville Standard Product List.
3. This installation approved for temporary line loading only.
4. RPZ must be tested according to most recently adopted City of Kerrville plumbing code.

Backflow Prevention **For Water Main Loading**

City of Kerrville
Standard Specifications

SIZE	FSCM NO.	DWG NO.	REV
		380.12	
SCALE		SHEET	

Locator Tape shall be 6 inches Wide and be buried at a depth of 2 Feet

Colors shall be as follows:

RED	-	ELECTRIC
ORANGE	-	FIBER/COM
YELLOW	-	GAS
GREEN	-	SEWER
BLUE	-	WATER
PURPLE	_	RECLAIMED WATER

FIBERGLASS (CARSONITE) POSTS (TO BE USED OUTSIDE OF R.O.W., IN OPEN FIELDS, CREEKS, ETC.

Posts to be a minimum 5' tall x 4" wide, Carsonite, and buried 18" deep. Shall bear the words "Caution, Sewer (or Water) Pipeline, Before Digging or in Case of Emergency Call City of Kerrville (830) 257-8000"

Only Sewer or Water Pipeline shall have the City's emergency phone number. Other utilities shall have the appropriate entity (and in some case the water and sewer is not owned by the City of Kerrville). Consult with Kerrville Utility Manager.

Utility Marking Detail

City of Kerrville
Standard Specifications

SIZE	FSCM NO.	DWG NO.	REV
		380.13	

SCALE		SHEET

Wastewater Specifications
Section 400

410 Design Criteria for Wastewater Collection

411 General Information

These design criteria are minimum requirements to be used in the design of wastewater collection systems within the jurisdiction of the City of Kerrville. The jurisdiction of the City of Kerrville is defined as the area bound by the ETJ of the City of Kerrville. In all cases, the Texas Commission on Environmental Quality Design Criteria For Sewerage Systems shall be enforced as the minimum design criteria for use in the City of Kerrville. The following design criteria shall be supplemented by the TCEQ design criteria. Engineered plans must be submitted to the City Engineer for review, comment and approval with regards to compliance with the Standard Specifications and applicable TCEQ Rules.

412 Design Criteria, Mains

412.01 Gravity Mains

A. Size: the minimum main size shall be eight (8) inches, except that six inch (6”) will be permitted only at the direction of the City Engineer or his designated appointee (in low flow situations, in standard length cul-de-sacs or lines less than 200 feet in length which will not be extended in the future).

B. Sanitary Sewer mains in new subdivisions shall be placed to produce a minimum velocity of 2 feet per second (based on the calculated flows) and in no case be flatter or steeper than the grades as set forth below:

Size (in)	Grade (ft/ft)	Grade (%)	Max. Grade(%)
6"	0.0050	0.50%	12.35%
8"	0.0040	0.40%	8.40%
10"	0.0035	0.35%	6.23%
12"	0.0030	0.30%	4.88%
15”	0.0015	0.15%	3.62%
18”	0.0011	0.11%	2.83%
24”	0.0008	0.08%	1.93%

The grades shown in the above are based on Manning’s formula with an assumed “n factor” or 0.013 and constitute minimum acceptable slopes. The minimum acceptable “n” for design and construction shall be 0.013. The “n” used takes into consideration the slime, grit and grease layers that will affect hydraulics or hinder flow as the pipe matures.

C. The maximum design velocity should not be greater than ten (10) fps at peak flow. However, a velocity in excess of ten (10) fps will be approved with proper consideration of pipe material, abrasive characteristics of the wastewater, turbulence, and thrust blocks at changes in direction. A minimum design velocity shall not be less than two (2) fps.

D. Where the pipe grade exceeds 12.5%, concrete retards shall be used at intervals not exceeding 50 feet.

E. All sanitary sewer mains shall be designed for a 50-year life.

F. Wastewater piping and appurtances shall conform to Section 420 of these specifications.

G. Minimum depth of cover shall be 3.5 feet measured from the top of pipe while the maximum cover shall be 14 feet, variances from this shall be as approved by the City Engineer. Backfill must be compacted in 4-6" lifts with a hand operated tamper, 6-8" lifts with a remote compactor or sheepsfoot roller mounted to a backhoe, max 12" lift with a sheepsfoot roller mounted to a minimum 5 ton excavator; compaction to 95% Standard Proctor (ASTM D-698) for cover of 10 feet or less, 95% Modified Proctor (ASTM D-1557) for more than 10 feet of cover. Density tests shall be taken in the presence of a city inspector horizontally every 100 linear feet and vertically at the following depths (depending on depth of sewer main): 2 ft, 5 ft, 7.5 ft, 10 ft, and 12.5 ft.

H. The average day flow for single family residences shall be taken to be 100 gal/capita-day. Peaking factors range from 2 – 6 depending on the population served. The following formula shall be used to determine the peaking factor, M,

$$M = 1 + 14 / (4 + P^{0.5})$$

Where, M = the ratio of peak-to-average and average-to-minimum rates of flow; and
P = the population served, thousands

I. Sewers shall be laid in straight alignment with uniform grade between manholes unless slight deviations from straight alignment and uniform grade are justified to the satisfaction of the City Engineer. Deviations from uniform grade (i.e., grade breaks or vertical curves) will not be allowed.

J. Gravity sewers with horizontal curvature shall be sloped at least 3% greater than the minimum allowable slope for the same diameter pipe. For example, an 8" diameter gravity pipe (with horizontal curvature) minimum slope shall be 0.40% X 1.03 = 0.412%. The maximum allowable manhole spacing for sewers with horizontal curvature shall be 300 feet. All reaches of sewer, which include horizontal curvature, shall be tested with a rigid mandrel and shall be hydrostatically tested using a maximum allowed exfiltration of 10 gallons per inch diameter per mile of pipe.

K. Construction methods which utilize flexure of the pipe joint are prohibited. The engineer shall provide the calculations for horizontal pipe curvature in the final engineering design report and detail the proposed curvature on the plans. The maximum allowable joint deflection shall be the lesser of the following three alternatives:

(A) equal to 5°;

(B) 80% of the manufacturer's recommended maximum deflection; or,

(C) 80% of the appropriate ASTM, AWWA, ANSI or nationally-established standard for joint deflection.

L. Separation Distances: Separation distances shall comply with Section 700 of the City Of Kerrville Standard Specifications. Waterline/Wastewater lines must conform to the TCEQ requirement for spacing as a minimum.

412.02 Force Mains

A. General: Pipe material and fittings shall be PVC meeting ASTM D2241 SDR-26 specifications with a minimum pressure rating of 160 psi or C-900 PVC DR-14. Pipe shall be designed and installed according to TCEQ rules and regulations. A detector tape shall be laid, in the same trench, above and parallel to the forced main. The tape shall state in a minimum of 6-inch tall letters "Pressurized Wastewater" continuously along the tape.

B. Installation shall be in accordance with Section 600 of these specifications. Contractor shall provide submittals on pipe and fittings prior to ordering materials.

C. Minimum depth of cover shall be 3 feet while maximum shall be 5 feet.

D. Testing: Systems will be tested in accordance with Section 800 of these specifications.

413 Design Criteria, Manholes

413.01 Manholes

Shall be placed and located to facilitate their use for inspection and maintenance of the sewer main. They will be placed at:

A. Intersections of mains
B. Horizontal alignment changes
C. Vertical grade changes
D. Change of pipe size
E. Six inch and above service laterals (because of large volume, etc)
F. At the end of all sewer mains except where a Wastewater Access Device is used.

F. Maximum spacing shall be 500 feet for mains between 6 and 15" diameters. For mains over 15 inches, maximum spacing shall be 600 feet. Maximum spacing for sewer mains with horizontal curves shall be 300 feet regardless of the size of pipe.
G. When sewer mains have horizontal curvature (generally where they follow curvature of a street); manholes shall be located at the P.C. and P.T. of the curve and the minimum radius of curvature shall be 250 feet.
H. Venting. Where gasketed manhole covers are required for more than three manholes in sequence, an alternate means of venting shall be provided at less than 1,500 foot intervals. Vents shall be designed to minimize inflow. Vents shall be 1 foot above the B.F.E. for the 100-year flood elevation.

413.02 Manhole Inverts

The bottom of the manhole shall be provided with a "U" shaped channel that is a smooth continuation of the inlet and outlet pipes. For manholes connected to pipes less than 15 inches in diameter, the channel depth shall be at least half the largest pipe diameter. For manholes connected to pipes 15 to 24 inches in diameter, the channel depth shall be at least three fourths the largest pipe diameter. For manholes connected to pipes greater than 24 inches in diameter, the channel depth shall be at least equal to the largest pipe diameter. In manholes with pipes of different sizes, the tops of the pipes shall be placed at the same elevation and flow channels in the invert sloped on an even slope from pipe to pipe. The bench provided above the channel shall be sloped at a minimum of 0.5 inch per foot. Where sewer lines enter the manhole up to 24 inches above the manhole invert, the invert shall be filleted to prevent solids deposition. A drop pipe shall be provided for a sewer entering a manhole more than 24 inches above the invert. The minimum change in elevation from invert in and invert out is 0.1' measured at the flow line.

414 Design Criteria, Sewer Services

RESIDENTIAL - As a minimum, 4" SCH-40 sewer service complete with a double cleanout placed at the property line will be required for each platted lot. Each service will be required to have at least 30" of cover between the curb and the service. Services shall be located near the center of each lot with a minimum of 9-foot separation between the water and the sewer services.

COMMERCIAL - In accordance with Kerrville Ordinances 97-03 and 98-17.

415 Design Criteria, Lift Stations

Lift Stations shall be designed in accordance with Section 430 and Section 440 of the City of Kerrville Standard Specifications. Lift stations shall not be used where a gravity main can be installed to provide the necessary service.

416 Construction Plans

A. Construction plans shall be drawn to one of the following scales:

Horizontal	Vertical
1” = 20’	1” = 2 ft
1” = 40’	1” = 4 ft
1” = 50’	1” = 5 ft

B. Elevations shall be provided at all manhole rims and flowlines. The pipe gradient between manholes shall be clearly shown on the plans. The ground profile shall be shown.
C. Benchmarks shall be shown on the plans at distances no greater than 1000 feet.
D. The location and stationing of all services shall be shown on the construction plans.
E. Sequence of construction (for sewer line and for all other construction in conformance with Section 101).

NOTE: A professional engineer may submit a request to modify design criteria, upon presentation of sufficient data to justify the variation, based upon unique and known circumstances.

420 Materials For Construction

All sewer mains shall have **metallic location tape** placed in the last 2 feet of fill of the trench (i.e. 2 feet deep from the final grade). See details.

421 General Information

421.01 Description: This item shall consist of furnishing all necessary labor, equipment, materials, and performing all work required to install sanitary sewer pipe and appurtenances of the class, size, and dimensions specified at the locations and to the lines and grades shown on the plans, all in strict compliance with these specifications.

422 Materials

422.01 PVC Pipe and Fittings: Pipe material, fittings, and services shall be cement lined Ductile Iron Class 50 or PVC meeting ASTM D3034-SDR26 specifications. Pipe shall be designed and installed according to City of Kerrville Subdivision Specifications and the Rules and Regulations for Sewage Collection Systems as adopted by the TCEQ.

Joints shall be locked in rubber sealing ring to provide water tight, flexible seal, and shall meet the requirements of ASTM D3212.

Permanent marking on the pipe shall include the following at intervals of not more than 5 feet:

Manufacturer's name and/or trademark.
Nominal pipe size.
PVC cell classification per ASTM D 1784.

Fittings shall be clearly marked as follows:

Manufacturer's name or trademark,

Nominal size,

The material designation

422.02 Manholes

A. General: Manholes shall be 48" diameter fiberglass material, larger diameter manholes will be necessary as indicated in the details section of this specification book. Brick manholes will not be allowed, nor shall brick be used to adjust manhole covers to grade. All manholes (whether in pavement or not) shall have a 4-ft x 4-ft x 6-inch thick slab of concrete placed around the ring and cover and reinforced with #6, 6" x 6" wire mesh. Where the manhole is in pavement it shall be rotated so that the sides of the square are at a 45° angle with the curb as shown in the details section. Manholes shall be tested using the Vacuum Test as specified in Section 800 of these specifications.

B. Grade Rings: Grade rings shall be HDPE Recycled Plastic Manhole Adjusting Rings. Manholes shall be designed and constructed with a maximum allowable grade adjustment (using grade rings) of no more than 8-inches. Existing manholes receiving rehabilitation may have a maximum allowable grade adjustment of no more than 20-inches including existing grade rings. Concrete grade rings will not be permitted and must be replaced with HDPE grade rings on existing manholes receiving rehabilitation.

C. Ring and Cover: The ring and cover shall be ductile iron, REXEL manufactured by SAINT-GOBAIN PAM or East Jordan Iron Works #1033Z or 1034Z or an approved equal with a minimum nominal opening of 24 inches. Manholes which lie within the 100 year floodplain shall have the covers be sealed and gasketed to protect against inflow. Where gasketed manhole covers are required for more than three manholes in sequence, an alternate means of venting shall be provided at less than 1,500 foot intervals. Vents should be designed to minimize inflow and be place a minimum of 1' above the Base Flood Elevation. Impervious material should be utilized for manhole construction in these areas in order to minimize infiltration.

423 Testing

423.01 Requirements: All testing shall be in accordance with Section 800 of the City of Kerrville Standard Specifications.

424.02 Manholes: Standard Manholes: Payment for manholes shall be in accordance with the unit bid price bid regardless of depth, which price shall be full compensation for ductile iron ring and cover, wall construction, sheeting, shoring, special joint treatment to prevent infiltration testing, and all other incidentals necessary to complete the work in accordance with the Bid documents.

430 Lift Stations

431 Description

431.01 General: The contractor shall furnish all labor, materials, and equipment required to provide the duplex pumping system specified herein. The control system shall be as specified by the City of Kerrville Utility Manager.

431.02 Extent of Work: System shall consist of two (2) submersible pumps, reinforced concrete wet well and valve vault with flood proof access hatches and coal tar epoxy interior coating, wet well level control switches, submersible pump cable, discharge plumbing with hydraulically seated discharge flange, pump mounting plates with bottom rail supports, upper rail supports, lifting chain, all pressure piping and valves within the lift station site, manual transfer switch and enclosure, Data Flow Model PCU001 pump control unit, control transformer and enclosure, electrical service pole, stainless steel Unistrut mounting assembly with concrete base, mobile generator receptacle, all electrical wiring, conduits, fasteners, and all NEMA 4X weather proof enclosures shown on plans and provided in specifications necessary to produce a properly functioning lift station site.

432 Quality Assurance

432.01 General: Three submittals shall be sent to the City Engineer for review. One approved copy shall be returned to the Contractor.

432.02 Submittals Required:

A. Certified dimension prints showing complete dimensions of all components.

B. Materials list showing material specifications for all components.

C. Performance curves for each pump unit showing capacity, head, and efficiency over the entire range of the pump.

D. Controls: Control schematic, field wiring diagram, manufacturer's catalog data on all components, panel and arrangement details.

E. Warranty: Manufacturer's standard published warranty certified on supplied equipment.

433 Component Construction

433.01 Submersible Pumps: The pump shall be Fairbanks Morse or as approved by the City Utility Manager. The pumps shall be capable of handling screened raw wastewater. The discharge connection elbow shall be permanently installed in the wetwell along with the discharge piping. The pumps shall be automatically connected to the discharge connection elbow when lowered into place, and shall be easily removed for inspection or service along with guide rails. Sealing of the pumping unit to the discharge connection elbow shall be accomplished by a simple linear downward motion of the pump. A sliding guide bracket shall be an integral part of the pump unit. All hardware associated with the pump guide, pipe supports, lifting chain, and hardware shall be 304 stainless steel. The

entire weight of the pump unit shall be guided by no less than two guide bars and pressed tightly against the discharge connection elbow with metal to metal contact.

Sealing of the discharge interface by means of a diaphragm, O-ring, or other device will not be acceptable. No portion of the pump shall bear directly on the floor of the sump.

Hydraulic Components:

A. The pump casing shall be of gray iron with a gray iron or ductile iron slide rail guide shoe attached to the discharge flange as an integral assembly. Casing shall be easily removable from the motor for full inspection of impeller.

B. The pump openings and passages shall be of adequate size to pass 3" diameter spheres and any trash or stringy material which may pass through a wastewater collection system. The back of the impeller shall incorporate straight auxiliary vanes to hydraulically reduce pressure on the primary seal, and force debris away from the impeller clearance. No wearing rings or adjustments of the backside clearance will be required.

C. The impeller shall be of semi-axial flow design, incorporating one or two sweeping vanes with wide flow channels. It shall be gray iron 30 or ductile iron Class 80-56-06 with designed counter mass for dynamic balancing to eliminate vibration. Balancing shall not deform or weaken the impeller.

D. The suction clearance between the impeller and pump casing shall be in the axial direction only. This clearance must be fully adjustable to maintain peak operating efficiency of the pump.

433.02 Pump Motor Description:

A. The submersible pump motor shall operate in accordance with the electrical power indicated on the drawings. The motor and pump must be connected to form an integral unit. Motor shall be a squirrel-cage, induction type in an air-filled water tight enclosure. The motor shall conform to NEMA design class B, and incorporate Class F insulation materials to withstand a continuous operating temperature of 155 degrees C (311 deg F). The pump and motor shall be capable of handling liquids with a maximum temperature of 40 deg C (104 deg F). Oil filled motors are not acceptable.

B. Motor shall be capable of sustaining a minimum of 10 starts per hour. The motor shall operate while only partially submerged and not require a cooling jacket or any other means of auxiliary cooling during normal continuous operation.

C. Motor housing shall be cast iron. The stator shall consist of copper windings with copper connectors applied to high-grade electrical steel laminations. The stator shall be held securely in place by a heat-shrink fit into the motor housing. Any other means of securing the stator which would require penetration of the motor housing shall not be considered acceptable.

D. Rotor shall be solid cast and dynamically balanced for vibration-free operation.

Rotor end bars and short circuit rings shall be of aluminum. The pump shaft shall be stainless steel. The shaft shall be machined with shoulders or snap ring grooves for positive placement of bearings. The upper and lower bearing shall be of heavy duty design, capable of supporting the shaft and rotor while under maximum radial and thrust loads. The bearings shall be permanently grease lubricated at the time of installation.

433.03 Sump Level Controls: Float switches shall be supplied to control sump level and alarm signals. The switches shall be sealed in a solid polypropylene float for corrosion and shock resistance. The support cable shall be stainless steel. A weight shall be attached to the cable above the float to hold switch in place. A quantity of four (4) floats shall be provided.

433.04 Check Valve and Pipe: The discharge piping shall include exterior lever air cushioned check valves and wheel actuated gate valves located in a concrete valve pit on each discharge main.

433.05 Concrete or Fiberglass (FRP) Wetwell: Concrete wetwell shall contain either a pre-cast or cast in place reinforced concrete foundation, pre-cast 10' diameter walls, and reinforced concrete top with flood proof access hatch. Exterior of concrete wetwell shall be coated with 6 mils of coal tar epoxy (pre-cast only). Interior of concrete wetwell shall be coated with PolyBrid 705 to 80 mils per manufacturer's recommendations.

The bottom of the wet well shall have a minimum slope of 10% to the pump intakes and shall have a smooth finish. The wet well shall be sized to provide adequate storage volumes.

Glass-Fiber Reinforced Polyester (FRP) wetwells shall be a one-piece monolithic designed unit constructed of glass-fiber reinforced, supplier certified, unsaturated commercial grade polyester resin containing chemically enhanced silica to improve corrosion resistance, strength and overall performance. FRP wetwells shall be manufactured in strict accordance with ASTM D-3753 "Standard Specification for Glass-Fiber Reinforced Polyester Manholes and Wetwells", as manufactured by Containment Solutions, Inc., Conroe, Texas, "Flowtite" Fiberglass wetwells, or Engineer Pre-Approved Equal.

433.06 Wetwell Access Hatch: The wetwell access hatch shall consist of two Halladay Series FIR access doors, each containing 36" X 60" openings, each centered directly over each pump and guiderail. The floodtight access doors shall be certified to be watertight when under 2' of water. Alternates to the Halladay access hatch shall be submitted to the City Engineer for review.

433.07 Guide Rail: The guide rail assembly shall be permanently attached to the sump basin. The entire rail system shall be constructed of stainless steel. The guide rail assembly shall consist of a bottom plate which shall be bolted to the bottom of the basin, a minimum of two guide rails per pump to insure correct placement of the pumps and provide easy installation and removal of pumps, and rail braces as required.

The lifting cable shall consist of a stainless steel braided wire cable attached to the pump lifting bail of sufficient length to connect directly to the hoist for single lift operation. An eyelet shall be provided at the upper end of this cable for attaching to the wet well access

frame.

433.08 Discharge Piping Assembly: The discharge piping assembly shall include be as shown on the construction plans. All interior piping within the wetwell shall be ductile iron or stainless steel. Any interior couplings shall be stainless steel. Piping within the valve vault shall be ductile iron. Check valves shall be external lever air cushioned swing check valves. Gate valves shall have flanged joints complete with wheel actuator.

433.09 Vent: The lift station vent shall be placed in order to vent the wet well and additionally protect the lift station from the 100 year flood event. The vent shall be installed a minimum of 1' above the Base Flood Elevatrion. Vent material shall be PVC schedule 40 pipe w/stainless steel screen.

433.10 Valve Vault: Valve vault shall be precast or cast in place reinforced concrete, outer dimensions 10' X 6', a minimum of 5' in depth, with a bottom backfilled with a minimum of 12" of washed 1.5" rock to allow the bottom to drain. The valve vault shall contain a Halladay Series WS27248 access hatch, or approved equal to allow operators to easily access the valve vault for maintenance.

433.11 Electric: The control system shall include circuit breakers, motor starters, transformers, hand-off-automatic switches, automatic pump alternator, wetwell level sensing devices, cycle timers, and accessories required to provide a complete and functional system.

All wiring within the wetwell and outside the control cabinet shall be run in PVC conduit except for wiring to motors which shall be in accordance to manufacturer recommendations. All wiring shall be in accordance with current National Electric Code and applicable local code revisions. It shall be the responsibility of the contractor to furnish and install correctly sized service wires and obtain service for installation. No splice shall be permitted in any wiring. It shall also be the responsibility of the Contractor to furnish and install all required exterior disconnects, switching mechanisms, alarm or control conduit and wiring.

433.12 Pump Control Center: A complete pump control center shall be mounted adjacent to the wet well on a Unistrut support anchored into a concrete pad, as shown on the construction plans. The panel, all its components, and the wiring shall be in accordance with the latest NEC Code. The panel shall be NEMA 4X construction with doors hinged to swing horizontally and utilize acceptable stainless steel clasping devices. For operator safety, one panel shall house the breakers, contactors, and current transformer while a separate panel shall house the pump control unit and phase monitors. All circuit breaker operators, selector switches and gauges shall be accessible from the front panel without opening the doors. Internal panel wiring shall be color coded and any wiring leaving the panel shall pass through properly numbered or coded terminal strips. Every switch, control relay, circuit breaker and other components, either inside or out shall be visibly and permanently identified.

The pump station control panel shall be as specified in the construction drawings. The contractor shall be responsible for providing compartmentalization of control transformer and control panel to prevent unauthorized access.

The service meter for lift station will be fastened to a service pole provided by contractor. Contractor will be responsible for placing electrical service line underground from the starters to the junction box located at the lift station wetwell. The work required will include the trenching, PVC conduit, and the construction of the junction box and control panel mounting structure.

434 ***SAMPLE* Pump Performance and Design Requirements** (This is a sample only, refer to the approved construction plans for site specific requirements).

TYPE:	**Fairbanks Morse, 4" Type 5432 Non Clog Submersible**
RATED CAPACITY:	**600 gpm at 80'**
MIN SHUT OFF HEAD:	**114'**
OPERATING SPEED:	**1765 rpm**
MIN. PUMP EFFICIENCY AT DESIGN POINT:	**65%**
MIN. MOTOR HORSEPOWER:	**20 HP**
MOTOR SERVICE FACTOR	**1.15**
ELECTRIC SERVICE	**480 Volt, 3 Phase, 60 Hz**

435 Operation of System

On sump level rise, lower switch shall first be energized, then upper switch shall next energize and start lead pump. With lead pump operating, sump level shall lower to low switch turn off setting and pump shall stop. Alternating relay shall index on stopping of pump so that lag pump will start first on next operation and become lead pump. If sump level continues to rise when lead pump is operating, override switch shall energize and start lag pump. Both lead and lag pump shall operate together until low level switch turns off both pumps. If level continues to rise when both pumps are operating, alarm switch shall energize and signal the alarm. If one pump should fail for any reason, the second pump shall operate on the override control and if the level rises above the override control, the alarm shall signal. All level switches shall be adjustable for level setting from the surface.

436 Execution

The Contractor shall leave the entire packaged lift station installed under this contract in proper working order. Upon completion of the installation, an acceptance test run shall be run in the presence of the City Engineer or his representative for a period of six (6) hours to ascertain that the system is operating correctly as required for the overall operation of the facility.

437 Operations and Maintenance Manuals

437.01 Requirements: The operations and maintenance manuals for each type of equipment furnished by the Contractor shall be a separate document meeting the following specific requirements:

A. Format and Organization

1. Use drawings and photographs to illustrate the printed text as necessary to fully present the required information.

2. Where information covers similar items of equipment, identify the applicable portions by heavy weighted arrows, boxes, or circles, or strike out the inapplicable information. Nonconforming data is not acceptable and will be returned for rework and resubmittal.

B. Contents

1. Table of Contents and Index
2. Description of each system and components
3. Complete starting and stopping procedures
4. Emergency stopping procedures
5. Operating instructions, including special operating instructions.
6. Routine maintenance procedures
7. Lubrication requirements
8. Manufacturer's printed operating and maintenance instructions, parts lists, illustrations, and exploded view diagrams.
9. Complete copy of approved shop drawing, including cross sections.
10. Complete procedure for installation, alignment, adjusting, and checking.
11. List of spare parts, recommended spare parts, and recommended quantity.
12. Name, address, and phone number of supplier's headquarters.
13. Safety instructions and requirements.
14. Electrical schematic diagram.
15. Control wiring diagram.
16. Copy of warranty or bond.
17. **Performance curves, engineering data and start-up test results, including start-up amperages, running amperages, and line voltages.**

C. Materials

1. Loose leaf on 30 pound punched paper, protected to repel oil and moisture and be wear resistant.
2. Printed on one side only.
3. Of original quality, reproducible by dry copy method.

D. Final Submittal

Four copies of operations and maintenance manual shall be submitted to the City of Kerrville prior to final acceptance.

438 Accountability

438.01 Warranty: Manufacturer shall warrant in writing the entire structure to be free from defects in materials and workmanship for a period of 1 year starting from the date of written project acceptance. The manufacturer shall submit in writing, a letter guaranteeing compliance to pump performance data submitted. The approved packaged lift station manufacturer shall provide references of similar lift station installations in Texas if requested by the City Engineer.

439 Payment

All materials, labor, electrical wiring, control panel, pumps, pressure piping, valves, and all incidentals necessary to install, connect, test and provide a functioning lift station shall be paid for at the lump sum bid for "Wastewater Lift Station".

440 Remote Terminal Unit (RTU) for Computer Based Supervisory Control and Data Acquisition System

441 General

441.01 Scope of Work: The CONTRACTOR shall furnish all labor, supervision, materials, tools, equipment and services necessary for the complete installation of a Remote Terminal Unit (RTU) for the existing computer based Distributed Supervisory Control and Data Acquisition (SCADA) system. The RTU system shall consist of product manufacturers who have at least five years experience in furnishing similar SCADA equipment and developing SCADA systems. The RTU system shall be placed in service and demonstrated to OWNER when it is complete and ready for operation.

The CONTRACTOR shall install the radio based RTU equipment at the Lift Station site and shall connect all signal, power, and communications wiring, cable, and program, start up, and calibrate the installed system. CONTRACTOR shall furnish all necessary labor and materials for program upgrading and I/O setpoint changes.

The accompanying input/output point list shall describe all of the input and outputs to be controlled by the system.

441.02 Submittals: The submittals for the SCADA system shall include the following:

A. Manufacturer's product data
B. Typical system diagrams showing all wiring connections and field wiring.
C. Narrative description of all software and hardware which will be provided by the CONTRACTOR.
D. Manufacturer's manuals for each component or unit which lists performance capabilities.

E. Manufacturer's recommended spare part list.
F. Warranty documents describing coverages and limits.
G. Wiring diagrams to show the complete point to point connections.
H. Manufacturer's recommended spare part list.

441.03 Acceptable Manufacturers:

A. Autocon Industries

B. Hydro-Con Industries

C. Siemens Energy and Automation

D. Engineer approved equal

442 Products

442.01 General: The SCADA system is currently used for data acquisition. However, the SCADA system shall have all the control capabilities for controlling pumps, valves, and other equipment used.

The RTU for the SCADA system shall perform the following:

A. Monitor the lift station, pumps, and wetwell alarms
B. Transmit current status information to the SCADA system at the WWTP over a radio telemetry unit.

442.02 Manuals: Three complete sets of laminated manuals shall be provided at the time the RTU is delivered to the site.

The manuals shall include the following information:

A. General System Description
B. Equipment Reference Manuals
C. Software Documentation
D. Hardware Documentation
E. Installation Guidelines
F. Operation Procedures
G. Maintenance Procedures

442.03 Quality Assurance:

A. The RTU and radio system shall be furnished with all equipment and accessories specified herein. All components shall be the products of companies normally engaged in the manufacture of such equipment.

B. The vendor shall perform all system engineering and assume responsibility for successful and functional operation of this equipment in accordance with the system requirements set forth in these specifications. The vendor shall be responsible for providing the complete verbal and written operating and

configuration procedures and instructions to OWNER designated operations personnel.

C. The vendor of the RTU system equipment must be approved by the engineer/owner and shall be required to show experience in the design, installation, and maintenance of radio based RTU systems.

D. The vendor must provide local service and inventory of replacement parts so that any system failure can be corrected within 24 hours.

442.04 Warranty: The vendor shall provide a warranty for parts and labor for a minimum period of one (1) year.

442.05 Functional Requirements:

A. The existing SCADA system shall be programmed to automatically interrogate each RTU for status information (analog, discrete, and accumulative data).

B. The existing SCADA system shall receive status information from the RTU.

C. The system shall be capable of communicating over the radio system furnished with the RTU system.

D. All system components shall be solid state design and modular construction shall be utilized throughout.

442.06 SCADA Software:

A. The existing SCADA system utilizes Windows NT operating system and operates Wonderware software.

B. The SCADA system shall store operating parameters (flowrates, levels, equipment run time, etc) taken every 3 minutes, and alarms as the occur on the hard disk storage device.

C. Software licenses shall be provided for remote site locations.

442.07 Remote Terminal Unit (RTU):

A. The RTU shall have the capability for the functions required. Refer to the input/output point list contained within this specification.

B. The RTU shall have the following capabilities:

1. Accept, directly, analog inputs such as thermocouple RTD and voltage ranging from ∀10.8 millivolts full scale to ∀5.4 volts without need for amplification or characterization.

2. Accept 4-20 ma dc primary 2 wire instrument inputs.

3. Accept, directly, rate signal inputs as well as performing pulse totalizations.

4. Provide outputs as required for external devices and/or control elements.

5. All software control programs in PROM memory or alterable data in battery backed RAM so there shall be no loss of configuration and parameter data regardless of the length of power failure. The battery shall be the socketed type and have a minimum life span of three years.

6. Include a power fail/auto restart routine which permits selection of restart in manual or automatic, based on the time interval of power failure.

7. Perform on line diagnostics.

8. Operate from power of 120 volts AC, +10%, -15% ; 60 Hz, ∀5 Hz.

9. Provide power to field transmitters as required.

10. All input circuits to have electrical noise immunity which, at a minimum, meets the IEEE 472-1974 standard for surge withstand capability.

11. Input/output lines shall withstand application of 250 volts AC rms for a period of one (1) minute without equipment damage.

C. Each RTU shall be located as indicated on the plans. All circuitry shall be on plug in cards which are field replaceable. The terminals for input and output connections shall be physically separated to avoid installation and maintenance damage. The terminals shall be a rugged type suitable for standard #16 AWG wire.

D. The remote RTU shall be Autocon Industries MICROCAT Class 9701 or approved equal.

E. RTU enclosures shall be NEMA 4X corrosion resistant fiberglass or stainless steel boxes complete with closed cell neoprene gasketing and a white or natural metal finish.

443 Radio Telemetry Equipment

443.01 Transceivers: Radio transceivers will meet the needs of the system and the FCC. The RTU shall have a radio transceiver meeting the requirements of FCC Part 90 that can be tuned, aligned, and repaired at any competent two-way radio service center. The RTU shall be capable of using any data radios that are commercially available for use on the Owner designated frequencies. The radio shall have a type-acceptance under FCC Part 90 for operation in the appropriate bandwidth (either narrow or wide band). All electrical connections to the radio shall be plug-in for ease of repair.

443.02 Antennas: Radio antennas shall be Omni or Yagi type units with gain as required by the site field surveys. The antennas shall be rated for 80 miles per hour wind speed. Antennas shall be connected to radios with RG/8U low loss coaxial cable. Each antenna shall be mounted at a height above ground as determined by the site surveys and comply

with FCC regulations. Coaxial connection to the remote unit enclosure shall be by means of a coaxial type bulkhead lightening arrester rated at 1 kilowatt with a minimum of 500 V and a maximum of 2000 V breakdown voltage. Antenna masts, if required, shall be free standing, un-guyed, galvanized steel or aluminum.

443.03 Modems: Radio modems will be provided as an interface between transceivers and the System Control Computer or RTU's. Radio modems shall be consistent with the system design and telemetry strategy.
443.04 Repeaters: Radio repeaters shall be furnished selectively to insure reliability of the telemetry network where such factors as terrain features or effective radiated power of the system does not provide a reliable communications path.

A. The RTU will be capable of being a Store and Forward Repeater and include the option of a route repeating strategy.

B. Two frequency repeaters will operate on one frequency with the base station radio on a separate non-interfering frequency with the system RTU's.

444 Base System Radio Control Hardware and Software

444.01 System Base Radio Modem: The system base radio modem shall link the base radio and the system control computer and be contained within a NEMA 4 wall mounted standard Hoffman enclosure suitable for office appearance. The system shall be battery backed for short term operation during power outages. The base radio modem and all other functions shall operate on battery voltage.

The base radio modem shall be capable of printed circuit board level additions of synthesized voice telephone or radio dialers and also be capable of serving as a terminal unit link to the control site as if the control site was another remote site on the system with full data and control processing.

444.02 System Reporting Software: The system reporting software is coordinated with the system files to provide automatic and operator reports of the system variables. Automatic period reports are generated for year, month, and day. Operator periods reports are generated for year to last month, month to last day, and day to last hour poll. Period reports express the system variables in form of accumulated count or averages for the period. Operator instantaneous values reports are implemented by polling the system to update the system status, then generating the report. The report presents the system variables in the form of instantaneous status on/off, fail, alarm, rate value, or level value.

445 Execution

445.01 General Installation: The SCADA system vendor shall attach field wiring to termination strips in RTU enclosures. The vendor shall install SCADA software and install all communications hardware. The vendor shall test all communication links to ensure proper communications between Central Station Unit (CSU) and RTU.

RTU Inputs/Outputs: The input/output requirements are described in the Input/Output point list sheet for this project.

445.02 Software Configuration: The RTU System vendor and user assigned operation personnel, shall configure or modify the CSU SCADA system so as to provide monitoring of the RTU at the SCADA system owned by the City of Kerrville.

The configuration shall include:

A. Creation of data base of I/O points
B. Inclusion of calculated values in data base
C. Creation of graphic displays
D. Creation of daily wastewater report, including pump run times, all alarms and changes of status, and lift station level status changes and time of day of occurrences.
E. Creation of monthly wastewater run time reports.
F. Creation of CSU control setpoints and strategies.

445.03 Acceptance Testing: The system shall be completely assembled, configured, and tested to insure the operation of each command and acquisition point. A hard copy of the database shall be submitted to the City for their review, comment, and approval one week prior to the acceptance testing.

445.04 Start Up: The manufacturer shall furnish a competent technical representative to check out field adjust and start up the system and operate the system for a period of five consecutive days.

445.05 Spare Parts: CONTRACTOR shall furnish one set of plug-in card used in the RTU system and five of each type fuse required by the system as spare parts.

445.06 Service and Support: During and after the warranty period, the vendor shall provide service on all RTU System equipment for a period up to five years from the acceptance date.

446 Payment

All labor, equipment, and materials associated with the installation of the RTU, radio modem, antenna, wire and cable, conduit, control transformer, battery back ups, enclosures, support brackets; and the site survey, FCC license, testing, and all incidentals necessary to install a SCADA system to monitor the Lift Station shall be paid at the lump sum bid price for "SCADA at Lift Station".

450 Effluent Reuse – Type I Reclaimed Water

All effluent reuse mains shall have **metallic location tape** placed in the last 2 feet of fill of the trench (i.e. 2 feet deep from the final grade). See details.

451 General

451.01 Description: This item shall consist of furnishing all necessary labor, equipment, and materials and performing all work required to install reclaimed water pressure mains and appurtenances of the class, size, and dimensions specified at the locations and to the lines and grades shown on the plans, all in strict compliance with these specifications.

452 Design Criteria

452.01 Hose bibs and Faucets: All hose bibs and faucets shall be painted purple and designed to prevent connection to a standard water hose. Hose bibs shall be located in locked, below grade vaults which shall be clearly labeled as being of non-potable quality. As an alternate to the use of locked, below grade vaults with standard hose bibs services, hose bibs may be placed in a non-lockable service box which can only be operated by a special tool so long as the hose bib is clearly labeled as non-potable water and complies with one of the following requirements:

A. Signs having a minimum size of eight inches by eight inches, as shown in Figure 1, shall be posted at all storage areas and on all hose bibs and faucets reading, in both English and Spanish, "Reclaimed Water, Do Not Drink" or similar warning.

B. The area shall be secured to prevent access by the public.

452.02 Separation Requirements: Separation distances shall comply with Section 700 of the City Of Kerrville Standard Specifications. Reclaimed water lines must conform to the TCEQ requirement for spacing as a minimum.

452.03 Pressure Mains: Reclaimed water lines which transport reclaimed water under pressure shall be sized according to acceptable engineering practices for the needs of the reclaimed water users. The designer shall consider methods to prevent or maintain lines to mitigate the effect of the deposition of solids in such lines. Pipe specified for reclaimed water force mains shall be of a type having an expected life at least as long as that of the lift station and shall be suitable for the reclaimed water being pumped and operating pressure to which it will be subjected. All pipes and fittings shall have a minimum working pressure rating of 150 pounds per square inch.

452.03 Gravity Mains: Gravity flow reclaimed water lines shall meet the requirements of Section 412 of these specifications. The designer shall consider methods maintain line fluid velocity to migrate the effects of the depositions of silt in the gravity conveyance.

452.04 Marking of Pipe: All exposed piping and piping within a building shall be either purple pipe or painted purple. All buried piping shall be manufactured in purple color. All exposed piping shall be stenciled in white with a warning reading "NON-POTABLE WATER". All exposed or buried reclaimed water piping constructed at a wastewater treatment facility is exempt from the color coding requirements of this section.

452.05 Isolation Valves. In-line isolation valves for reuse pipes shall open clockwise to distinguish them from potable water isolation valves. Valve casings for underground isolation valves shall have cast into the cast iron lid "reuse" or "NPW".

452.06 Storage: All effluent ground level and elevated storage tanks shall be designed, installed, and constructed in accordance with current AWWA standards with reference to materials to be used and construction practices to be followed, except for health-based standards strictly related to potable water storage and contact practices, where less

restrictive standards may be applied. All storage facilities shall be stenciled in white with a warning reading “NON-POTABLE WATER”.

460 Measurement and Payment

460.01 Sewer Mains:

A. All pipe and trenching for sanitary sewers shall be measured by the linear foot of the size and at the depth installed from the flow line of the pipe to the ground surface over the center of the pipe in 2 foot increments of depth greater than 6 feet, horizontal, and center to center of manholes.

B. Payment shall be at the unit price bid for the specific pipe size and various increments of depth as shown on the plans and measured as described above, which price shall be full compensation for pipe and fittings necessary to complete the work, including transportation, handling, unloading at the site and all labor, tools, equipment, and incidentals necessary to completely install pipe fittings including trenching, sheeting, shoring, pipe installation, saw-remove-replace concrete riprap, pipe embedment, reinforced concrete encasement, trench backfill, placing excess excavated materials from trenches in flow area of creek upstream from concrete encasement, compaction, final clean-up and all other incidentals necessary to complete the work.

460.02 Other Payments:

Payments shall be at the unit price bid for the specific budgeted item as shown on the construction specifications. The unit price shall be full compensation for the bid item necessary to complete the work, including transportation, handling, unloading at the site and all labor, tools, equipment, and incidentals necessary to complete the work of the bid item.

470 Standard Products List

470.01 Piping

PIPING		
TYPE	**Manufacturer**	**Size**
Ductile Iron	U.S. Pipe, Tyler Pipe, Griffin Pipe, American Ductile Iron Pipe, McWane, or approved equal	3" and up
The above shall apply to lift station piping suction and discharge always flanged.		
PVC SDR 26 Sewer	J-M Pipe, Certainteed, North American Pipe, Can-Tex, or approved equal	4" and up
The above shall apply to gravity sewer in uninterfered trench (not crossing water mains, through creeks etc.)		
ASTM D-2241 SDR-26 Sewer Pressure Pipe C-900 PVC DR-14 Only	J-M Pipe, Certainteed, North American Pipe, Can-Tex, or approved equal	4" and up
The above shall apply to lift station force mains, interfered trenches, special circumstance gravity lines as deemed necessary by City Engineer and or Water/Wastewater Manager		
304 Stainless Steel	Merit Brass or approved equal	1/4 " up to 3"
The above shall apply to Wastewater Plant, lift station and air relief piping, pump rails, any and all nipples for gauges, sample cocks etc.		

470.02 Valves

VALVES		
TYPE	**Manufacturer**	**Size**
External Lever and Weight Check Valves	Mueller A-2606-01 or approved equal	2 1/2" to 16"
Ball Check Valves	Apollo or approved equal	1 1/4" to 2"
Gate Valves	Mueller 2360 &2361 Series or Clow F-6102	2 1/2' through 24"
Small Brass Ball and Gate Valves	Hammond or equal gate valves Red&White ball valves or approved equal	1/4" through 2"

470.03 Sewage Air Release Valves

Sewage Air Release Valves		
TYPE	**Manufacturer**	**Size**
Air Release Vacuum Breaker	A.R.I. Model D-025 or approved equivalent	2" and 3"

470.04 Manholes

Manholes and Wetwells		
TYPE	**Manufacturer**	**Size**
Fiberglas Heavy Wall Manholes (minimum wall thickness 0.480 inches)	Flowtite ASTM D 3753 or approved equivalent	42", 48", 54", 60", 66", 72", and 92"
H-20 Minimum rating		
Fiberglas Heavy Wall Wetwells (minimum wall thickness 0.480 inches)	Flowtite ASTM D 3753 or approved equivalent	36" to 240" diameter 6ft. To 35 ft. height
H-20 Minimum rating		

470.05 Ring & Cover

Ring and Covers		
TYPE	**Manufacturer**	**Size**
Ductile Iron Ring and Cover	Saint Gobain RE62M4RD or East Jordan Iron Works #1033Z or #1034Z or approved equivalent must be ductile iron self latching	24"
H-20 Rating		
Ductile Iron Ring and Cover	Saint Gobain RE60R8FD or approved equivalent must be ductile iron with latching mechanism for inflow prevention	24" or 32"
H-20 Rating		

470.06 Covers

Covers		
TYPE	**Manufacturer**	**Size**
Aluminum Wetwell Covers and hatches	Halliday W1S, W2S, S1S, S2S, W1R, W2R, S1R, S2R, H1W, 2W, H1R, H2R or approved equal	As Per Specifications depending on pump size and wetwell configuration
Cleanout boot for drop manholes	East Jordan Iron Works model #1565, Cast Iron	As per manufacturer's specifications

470.07 Miscellaneous

Miscellaneous/Fasteners		
TYPE	**Manufacturer**	**Size**
?	?	?
Note: Any and all fasteners, nuts, bolts, washers, chains, wire rope, clasps, rails, hasps, brackets, or hangers at or around wastewater wetwells shall be a minimum construction material of 304 stainless steel and 316 or greater stainless steel if deemed necessary by the City Engineer or Water/Wastewater Manager.		
Note: Any and all fasteners, nut and bolt combinations not required to have thread locking compound shall be dressed with an anti-seize thread compound so as to allow for disassembly in future. Anti-seize compound shall be installed before final assembly.		
Note: Any device, piping assembly, bracketry, hatch or any other item secured to concrete on or around a wastewater plant or lift station shall be approved by the City Engineer, Water/Wastewater Manager or designated City of Kerrville Inspector before installation.		

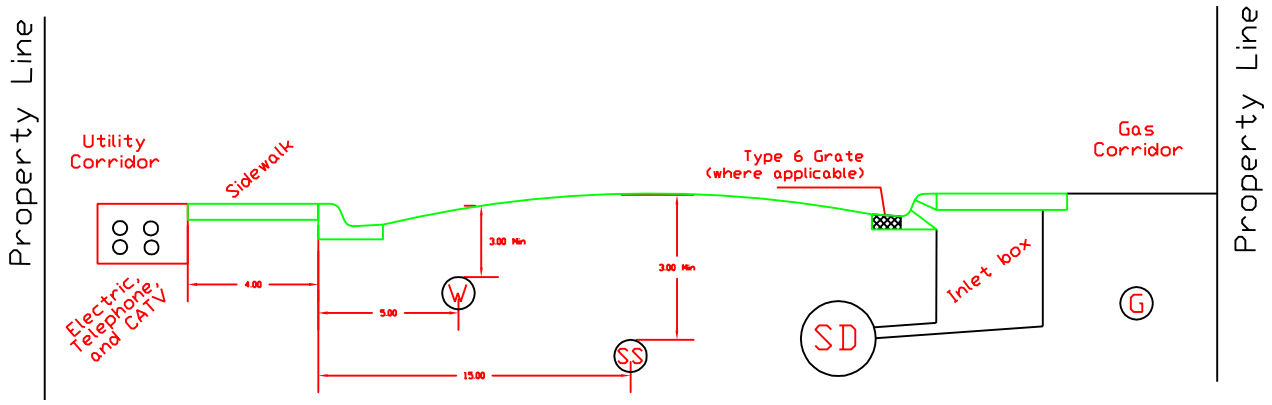

UTILITY CORRIDOR LAYOUT

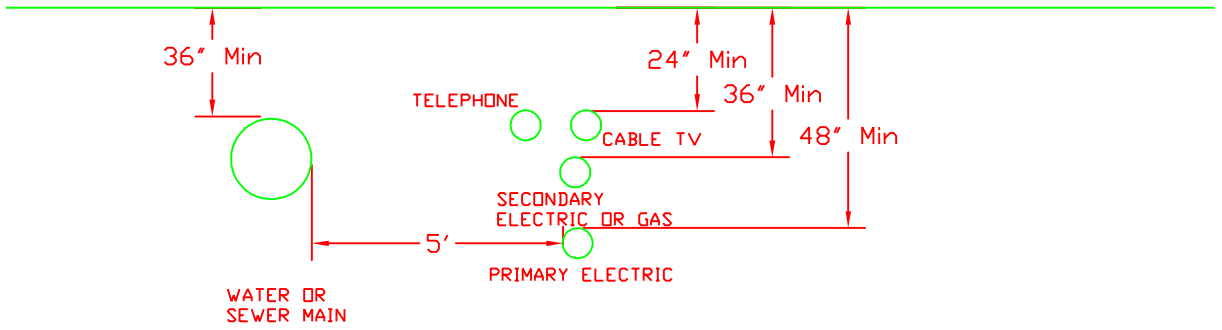

WHERE UTILITIES ARE PARALLEL TO WATER MAIN

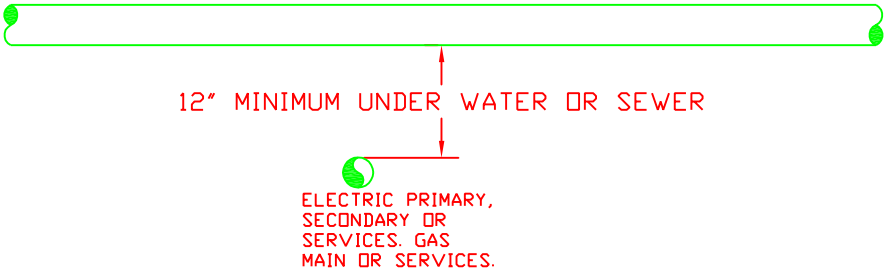

WHERE ELECTRIC OR GAS CROSS WATER MAIN, WATER SERVICE, OR HYDRANT LEAD

NOTE:
ELECTRIC OR GAS SHALL BE PLACED A MINIMUM OF 1 FOOT BELOW SHALLOW SEWER MAINS OR SEWER SERVICES THAT ARE 48" OR LESS IN DEPTH.

Utility Corridor Layout Details			
City of Kerrville Standard Specifications			
SIZE	FSCM NO.	DWG NO. 480.01	REV
SCALE		SHEET	

Typical Water And Sewer Service Line Locations

(For Single Water Service)

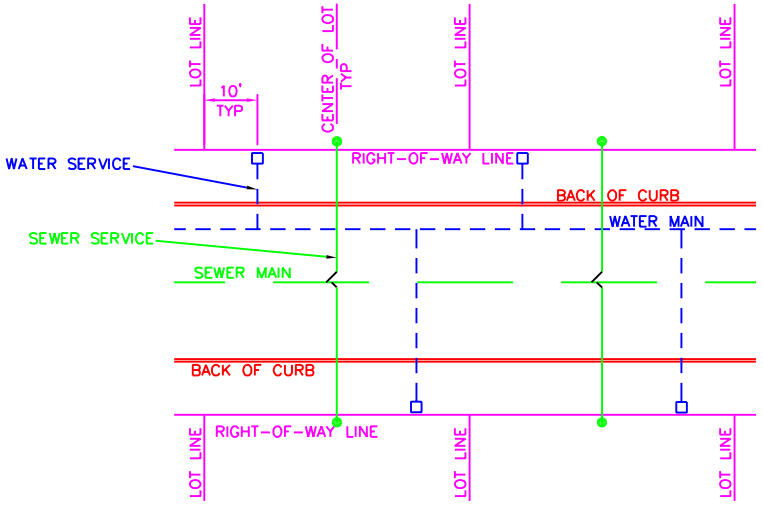

(For Double Water Service)

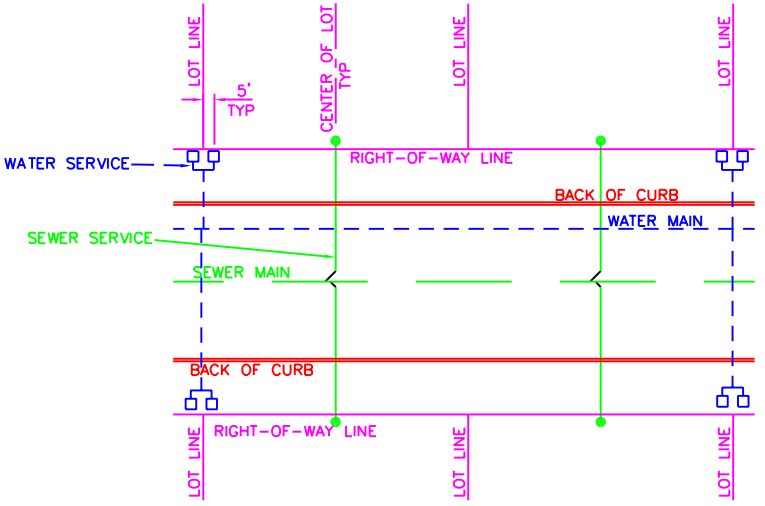

NOTE: SEE TYPICAL WATER AND SEWER SERVICE DETAILS

Lot Frontage Detail

City of Kerrville
Standard Specifications

SIZE	FSCM NO.	DWG NO.	REV
		480.02	
SCALE		SHEET	

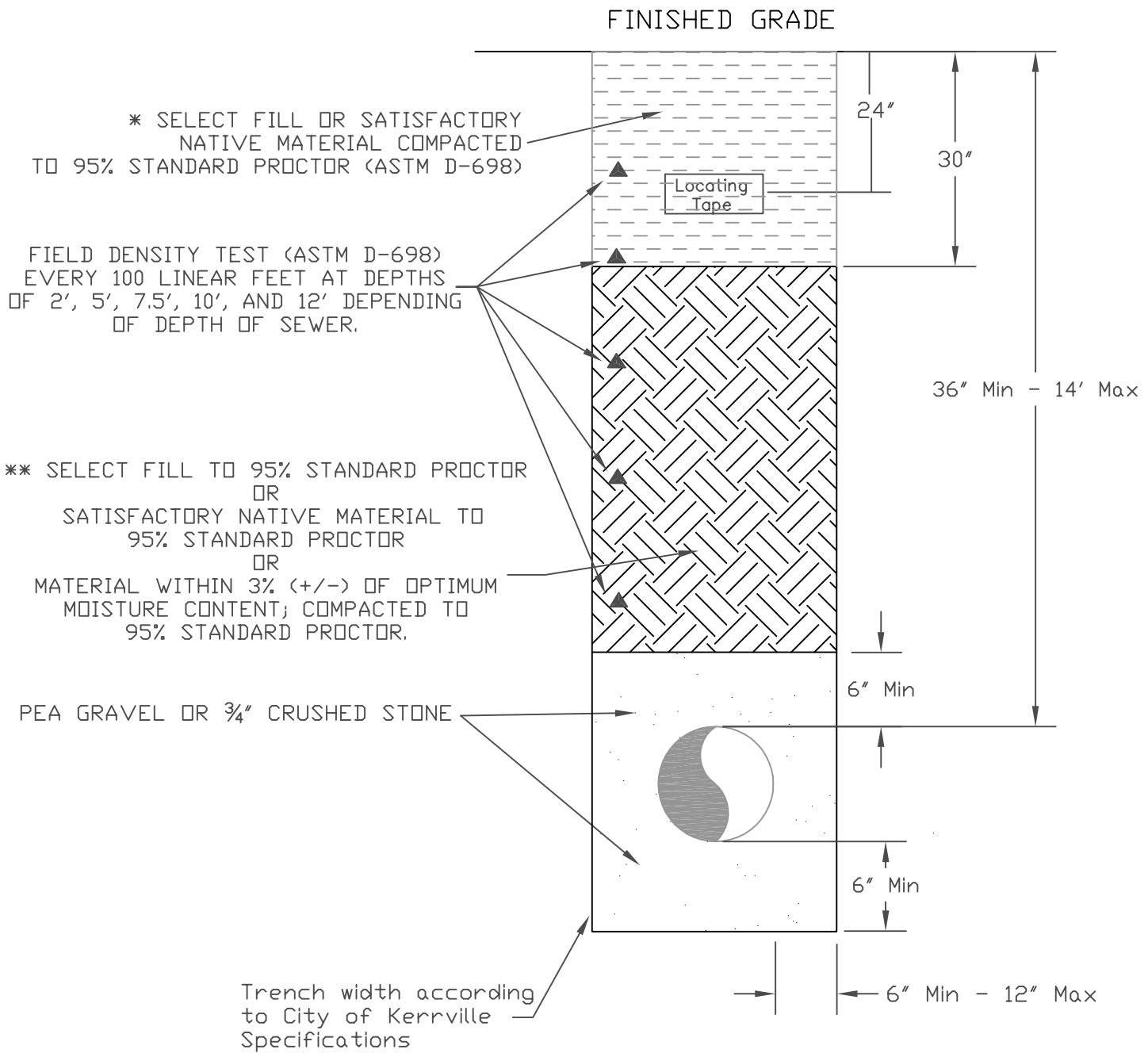

INSTALLATION OF PIPE TO FOLLOW CITY OF KERRVILLE SUBDIVISION SPECIFICATIONS

NOTES:

* MOISTURE SENSITIVE MATERIAL COMPACTED TO 95% STANDARD PROCTOR AND WITHIN 3% (+/-) OF OPTIMUM MOISTURE CONTENT MAY BE USED WHERE WATER LINE IS NOT UNDERNEATH PAVEMENT.

** MODIFIED PROCTOR (ASTM D-1557) MUST BE USED AT DEPTHS GREATER THAN 10 FEET.

▲ REPRESENTS FIELD DENSITY TEST LOCATION

Sewer Line Embedment & Field Density Testing

City of Kerrville
Standard Specifications

SIZE	FSCM NO.	DWG NO.	REV
		480.03	
SCALE		SHEET	

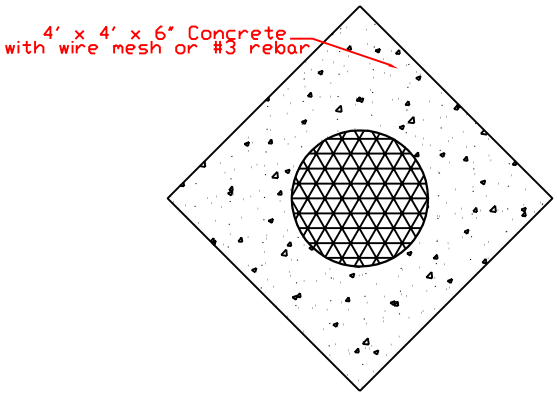

SECTION D-D

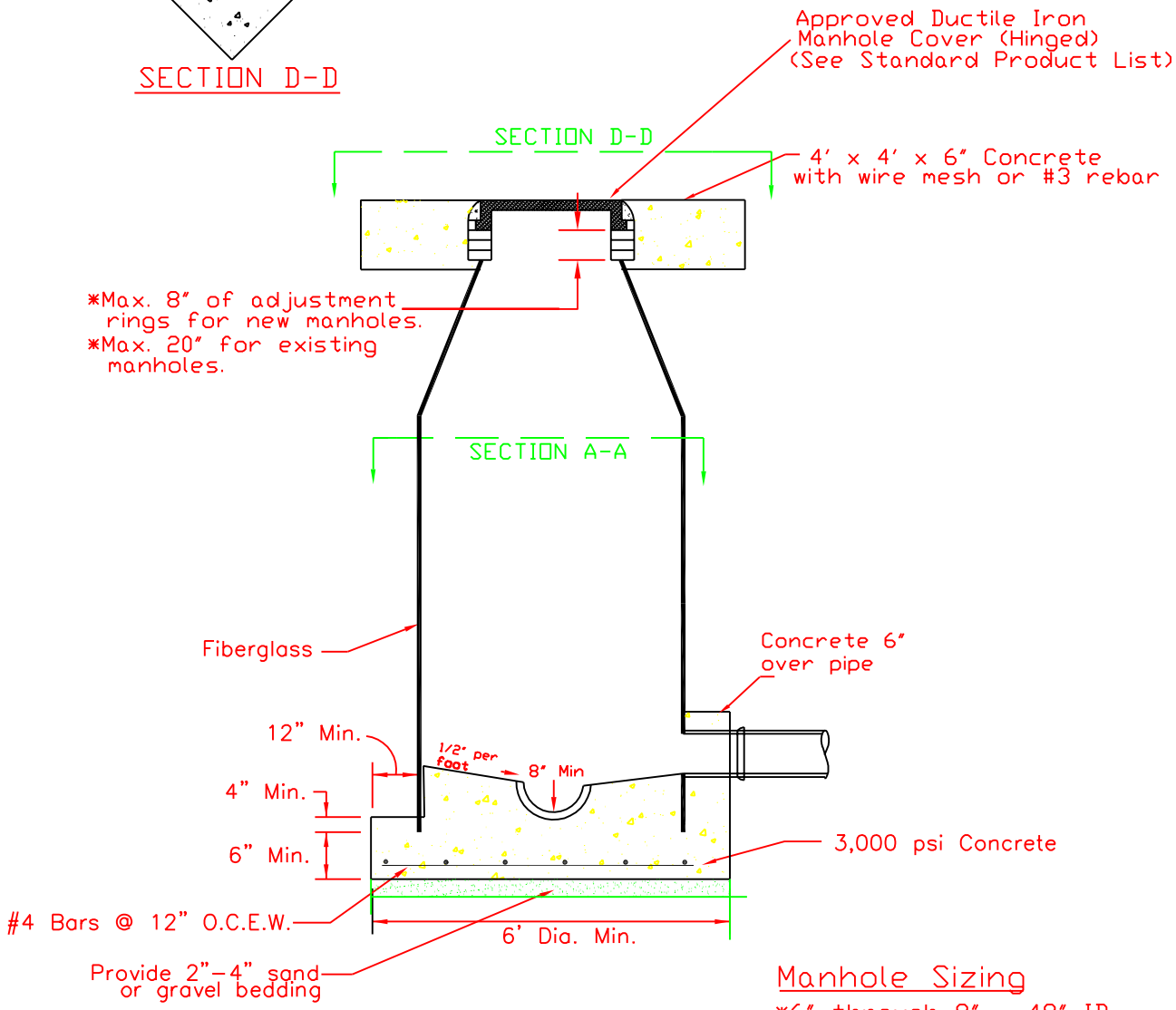

Existing conditions may dictate footing size and encasement of drop assembly.

Manhole Sizing

*6" through 8" - 48" ID
*10" through 12" - 60" ID
*14" through 20" - 72" ID
*20" or Larger and other than in-line manholes will be sized by City of Kerrville Engineering

SECTION A-A

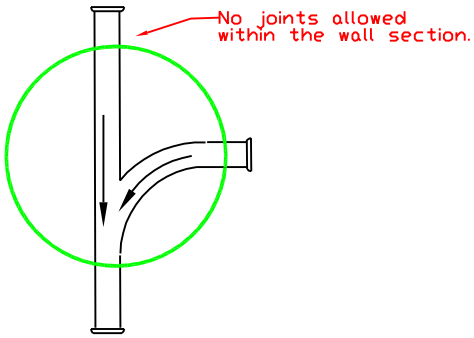

Manhole Detail

City of Kerrville
Standard Specifications

SIZE	FSCM NO.	DWG NO.	REV
		480.04	
SCALE		SHEET	

SECTION D-D

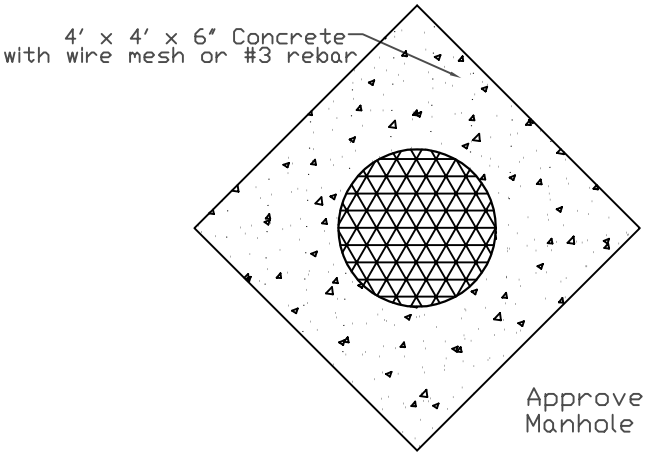

Manhole Sizing

*6" through 8" - 48" ID
*10" through 12" - 60" ID
*14" through 20" - 72" ID
*20" or Larger and other than in-line manholes will be sized by City of Kerrville Engineering

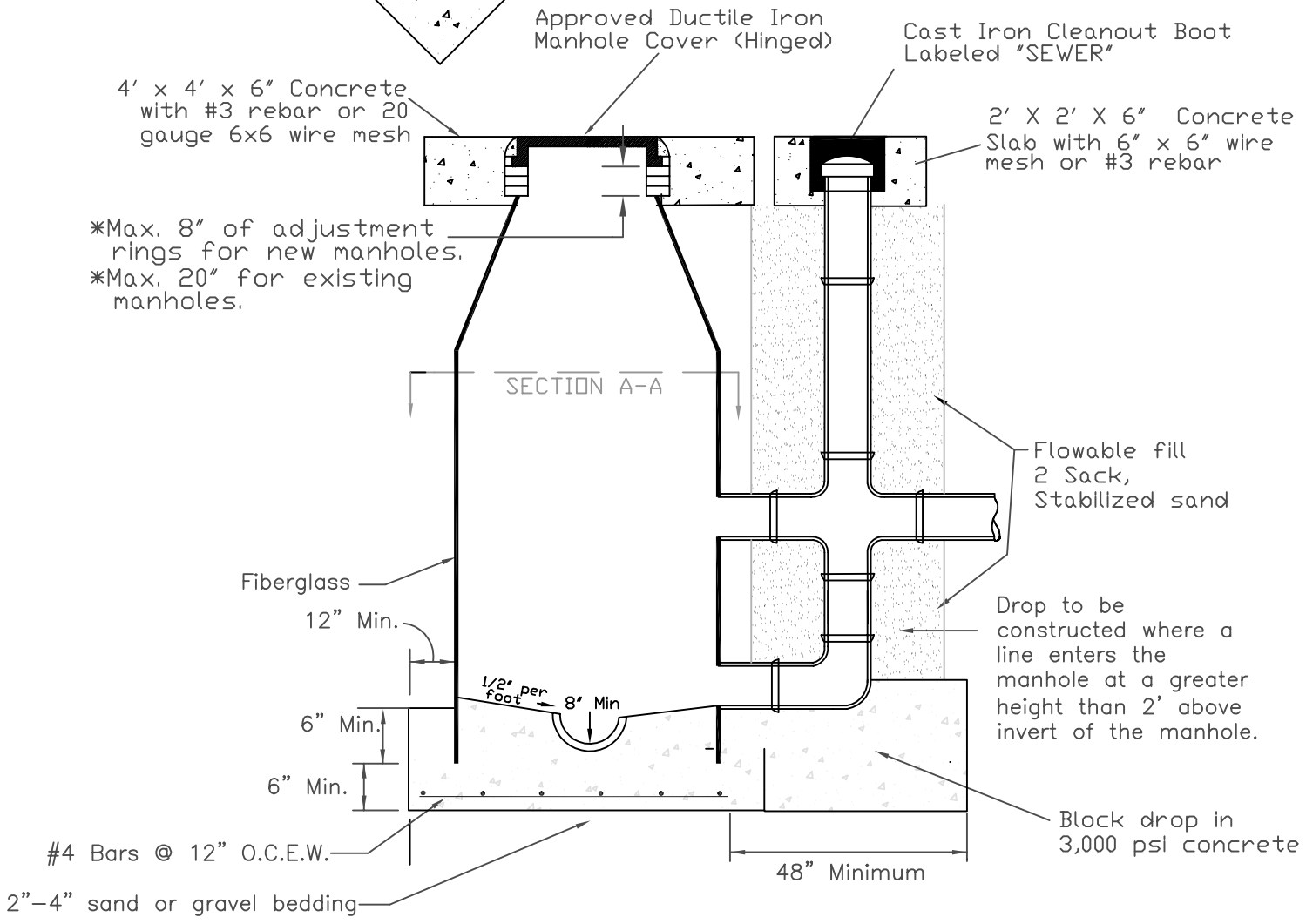

Existing conditions may dictate footing size and encasement of drop assembly.

SECTION A-A

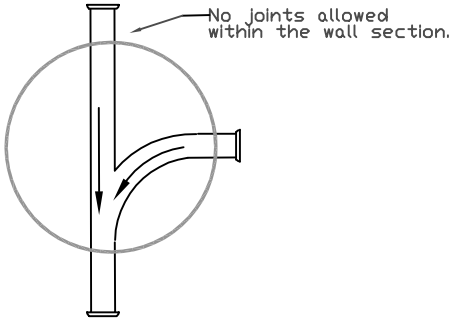

Drop Manhole Detail

City of Kerrville
Standard Specifications

SIZE	FSCM NO.	DWG NO.	REV
		480.05	
SCALE		SHEET	

THRUST BLOCKING NOTES

1. THRUST BLOCKING SHALL BE PLACED AGAINST UNDISTURBED SOIL.

2. CONCRETE THRUST BLOCKING SHALL BE PROVIDED WHERE CHANGES IN DIRECTION OCCURS, AT TEES, BENDS, CROSSES, CHANGES IN SIZES, STOPS(DEAD ENDS), VALVES, AND OR AS SHOWN BELOW.

3. CONTRACTOR SHALL USE THE FOLLOWING TABLE OF DIMENSIONS FOR THRUST BLOCKING AREA.

THRUST BLOCK SCHEDULE

PIPE SIZE	A PLUGS& TEES	B 90° B	C 45° B	D GATE VALVES
4" OR 6"	1'0"	1–2"	1–2"	1'0"
8"	1'3"	1–6"	1–6"	1'0"
12"	2'8"	3'0"	2'3"	1'0"
16" & Larger	3'8"	4'0"	3'0"	2'0"

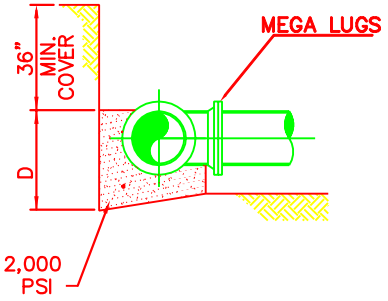

ALL FITTINGS

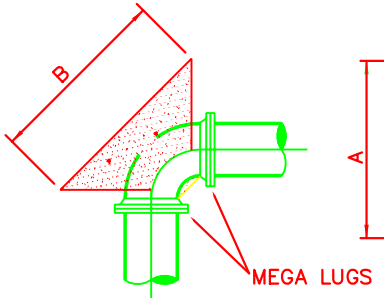

90° BENDS

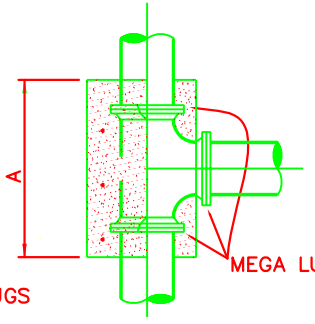

TEE

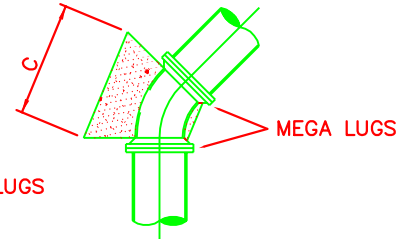

ALL OTHER BENDS

THRUST BLOCK DETAILS

SCALE : NONE

MEGA LUGS

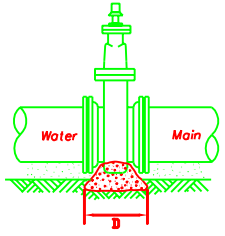

Thrust Blocking Detail for Sewer Pressure Pipe

City of Kerrville

Standard Specifications

SIZE	FSCM NO.	DWG NO.	REV
		480.06	

SCALE		SHEET

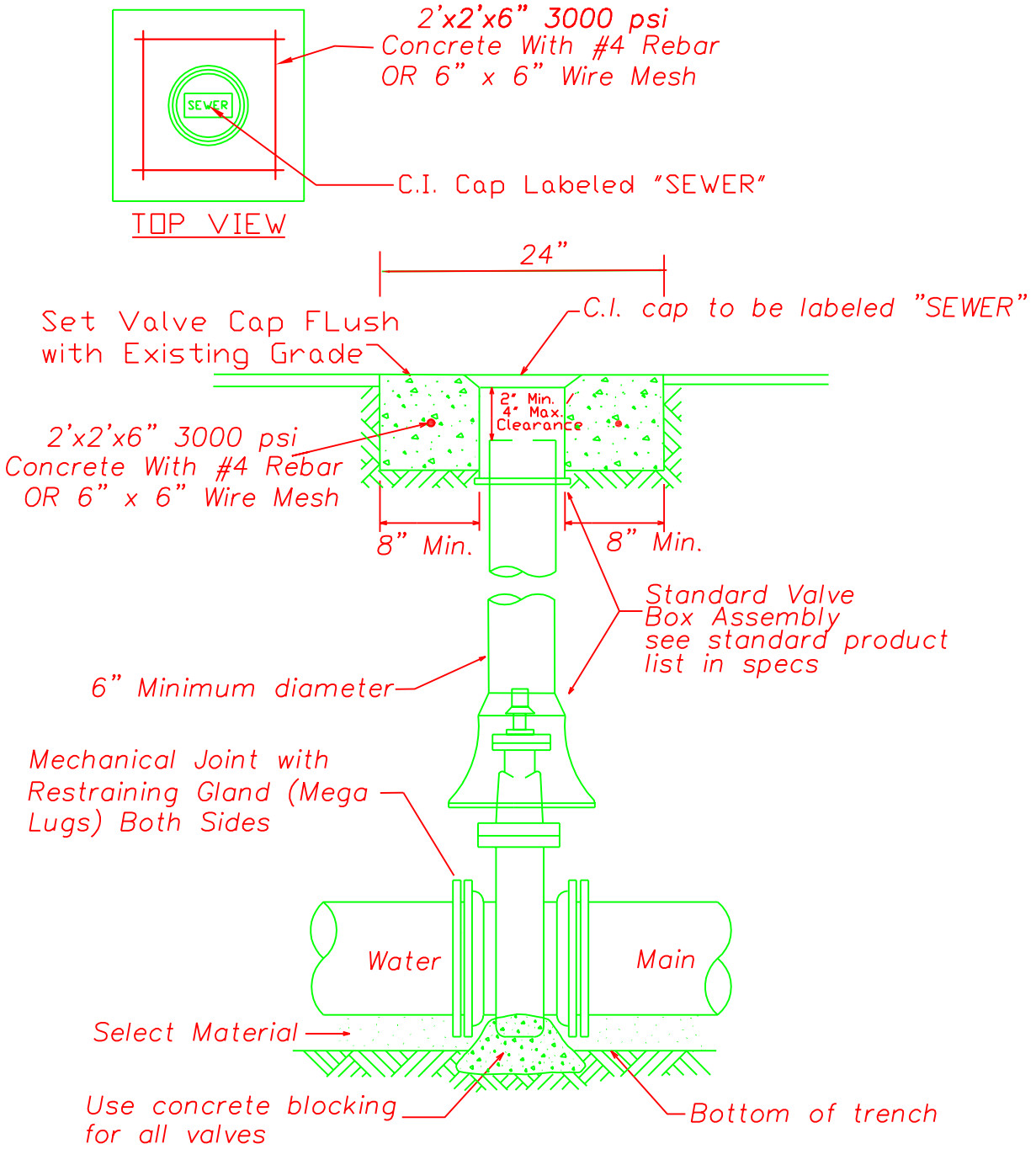

NOTE: ALL FLUSHING AND GATE VALVES TO BE AWWA STANDARD COUNTERCLOCKWISE OPENING WITH RESILIENT SEATS.

OPERATING NUT EXTENSION REQUIRED
IF TOP OF NUT IS GREATER THAN 5 FT DEEP
(SEE DETAIL FOR VALVE NUT EXTENSION)

Gate Valve Detail

City of Kerrville
Standard Specifications

SIZE	FSCM NO.	DWG NO.	REV
		480.07	
SCALE		SHEET	

NOTE: SEWER MAINS DEEPER THAN THAT ALLOWED BY THE CITY OF KERRVILLE SPECIFICATIONS WILL REQUIRES SPECIAL WRITTEN PERMISSION FROM THE CITY ENGINEER.

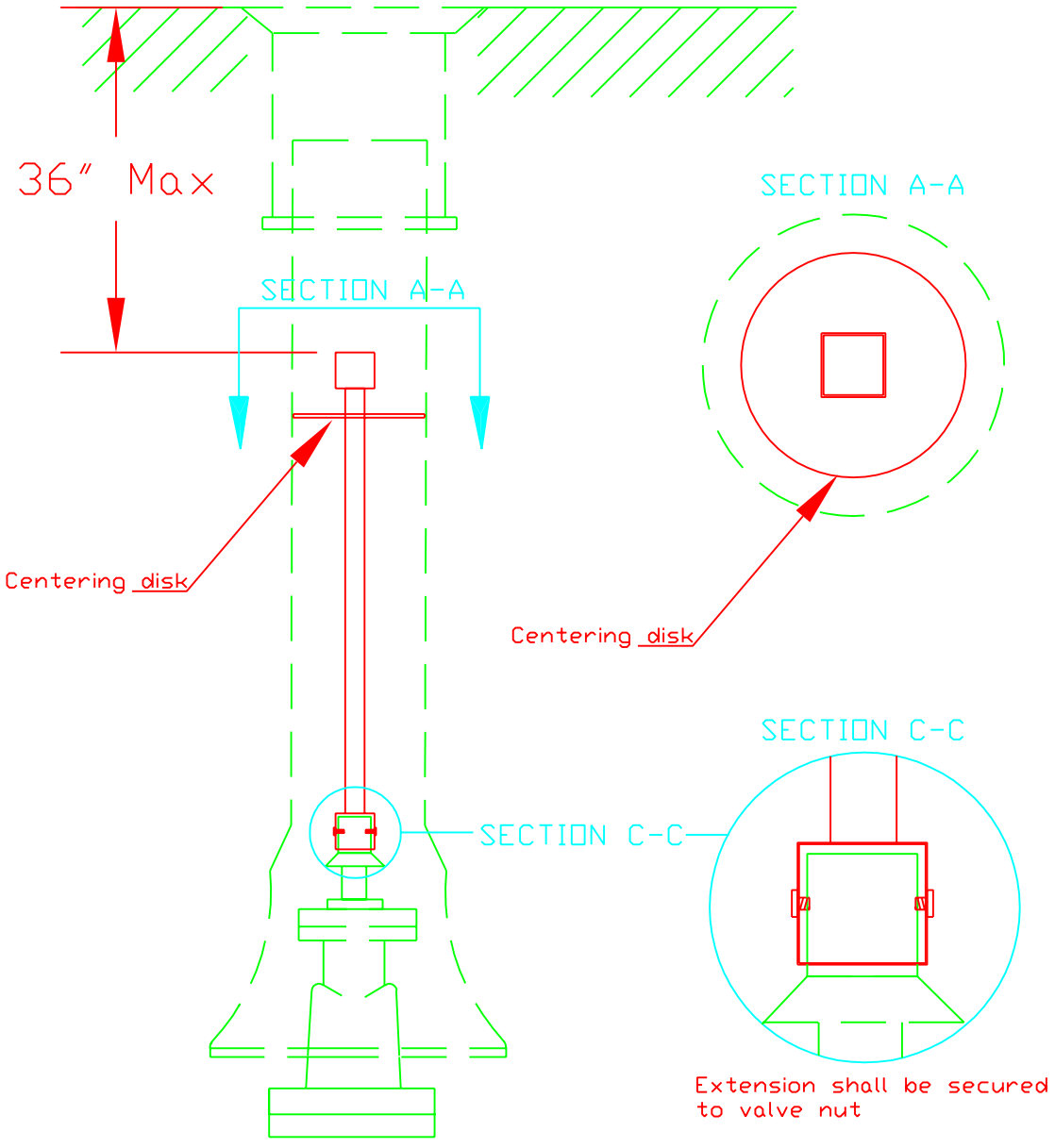

Valve Extension Details

City of Kerrville

Standard Specifications

SIZE	FSCM NO.	DWG NO.	REV
		480.08	

SCALE		SHEET

LATERAL CONNECTION TO EXISTING SEWER MAIN/STUB-OUT

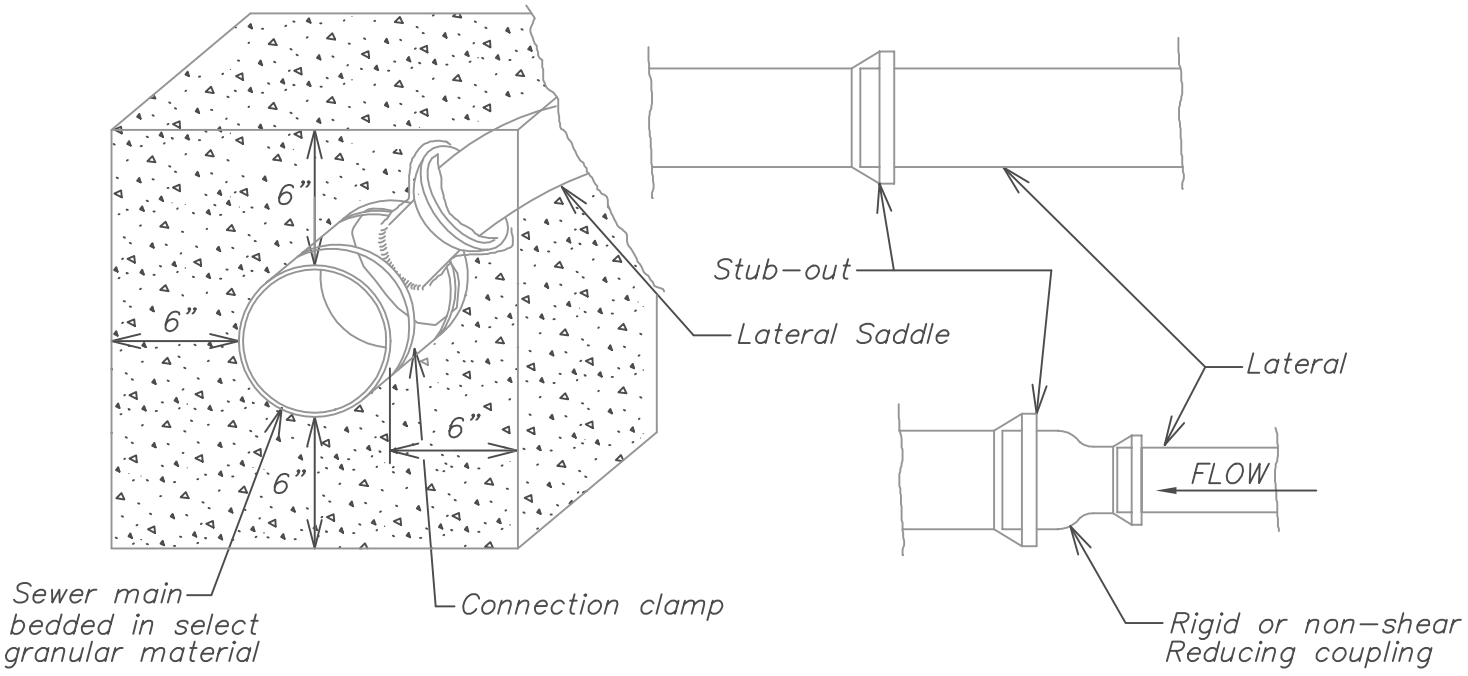

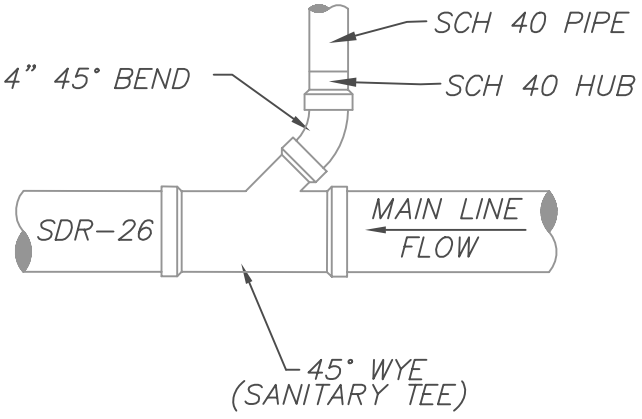

Note:
Service taps to be installed at either 9:00 thru 11:00 or 1:00 thru 3:00 o'clock positions.

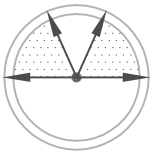

Sewer Tap Detail			
City of Kerrville Standard Specifications			
SIZE	FSCM NO.	DWG NO. 480.09	REV
SCALE		SHEET	

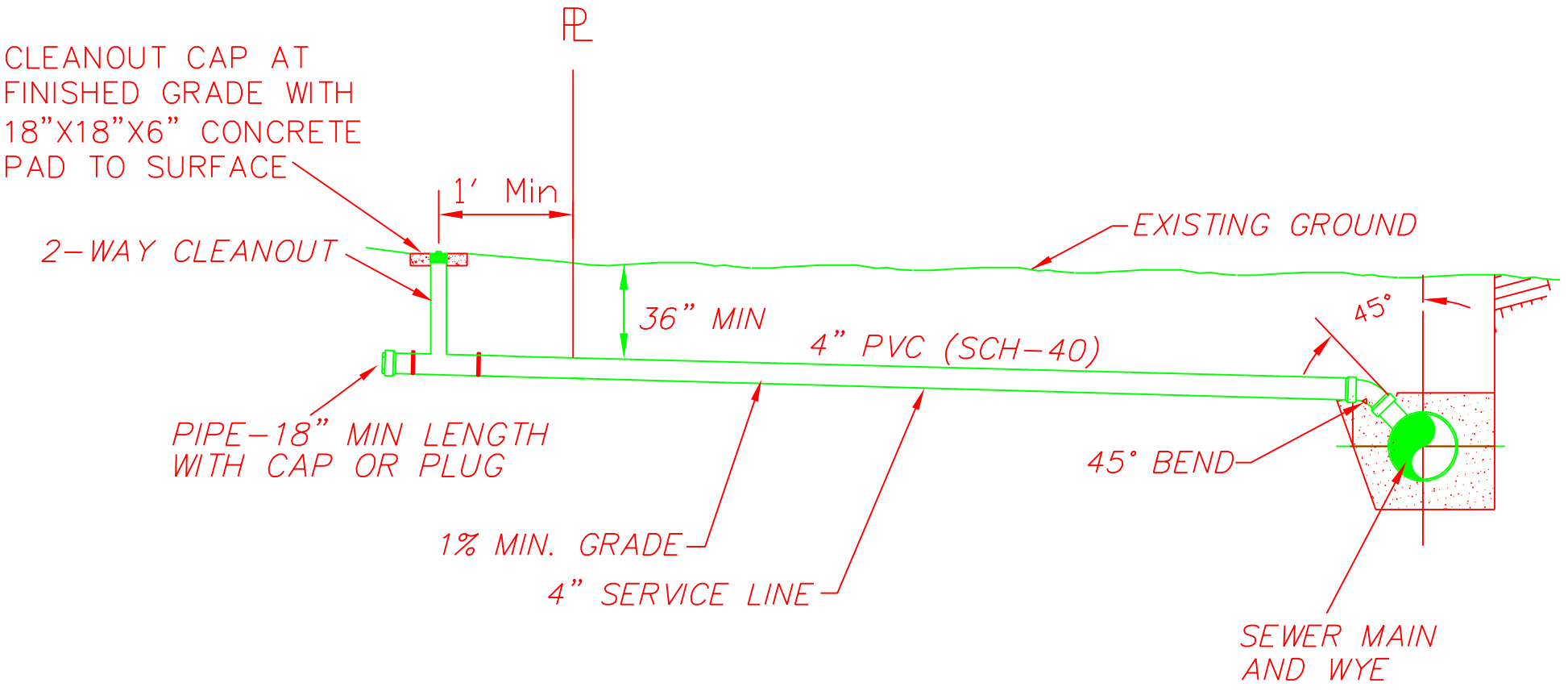

IF CLEANOUT IS INSTALLED AT OR IN DRIVEWAY, CAST IRON OR BRONZE CLEANOUT BOX PLACED IN CONCRETE FLUSH WITH SURFACE OF DRIVE

TOP OF SERVICE STACK SHALL BE OF SUFFICIENT DEPTH TO PROVIDE ADEQUATE FALL FROM THE FACILITY TO BE SERVED

CONNECTION DOWN TO 7'-0" USE STANDARD SERVICE CONNECTION

DEEP SERVICE CONNECTIONS APPLY WHEN DEEPER THAN 7'-0"

Standard Sewer Service Detail

City of Kerrville
Standard Specifications

SIZE	FSCM NO.	DWG NO.	REV
		480.10	

SCALE		SHEET

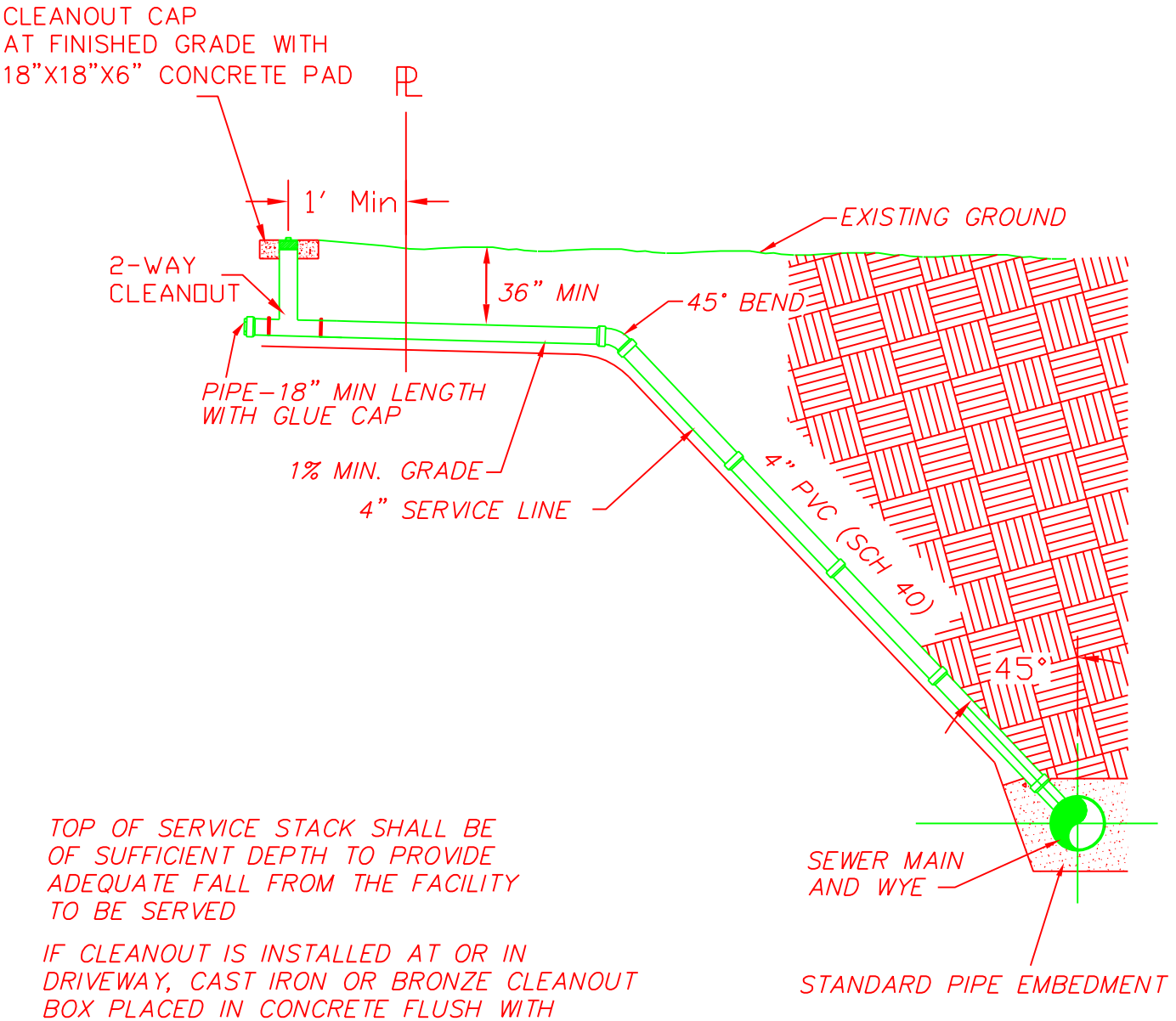

TOP OF SERVICE STACK SHALL BE OF SUFFICIENT DEPTH TO PROVIDE ADEQUATE FALL FROM THE FACILITY TO BE SERVED

IF CLEANOUT IS INSTALLED AT OR IN DRIVEWAY, CAST IRON OR BRONZE CLEANOUT BOX PLACED IN CONCRETE FLUSH WITH SURFACE OF DRIVE

CONNECTION DOWN TO 7'-0" STANDARD SERVICE CONNECTION

DEEP SERVICE CONNECTIONS APPLY WHEN DEEPER THAN 7'-0"

Deep Sewer Service Details

City of Kerrville
Standard Specifications

SIZE	FSCM NO.	DWG NO.	REV
		480.11	
SCALE		SHEET	

NOTE: ALL PIPE AND FITTINGS TO BE SCH-40 WITHIN THE R.O.W.

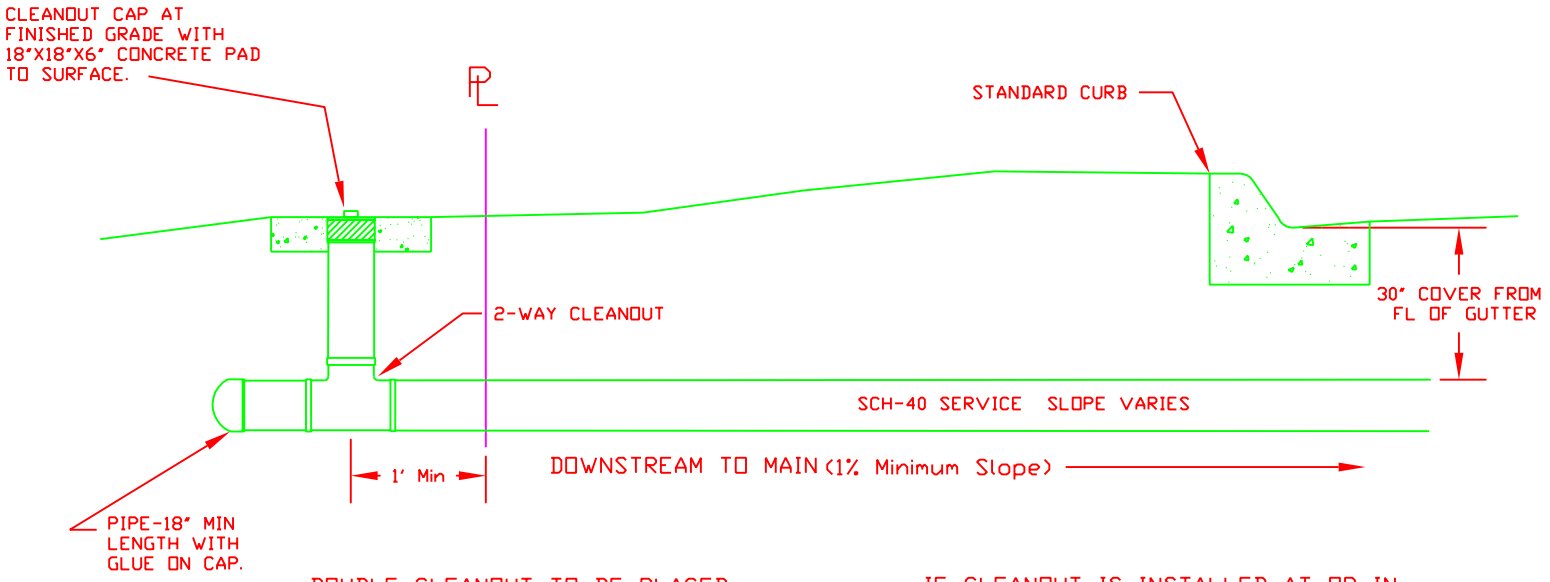

DOUBLE CLEANOUT TO BE PLACED ON THE PROPERTY OWNERS SIDE OF THE PROPERTY LINE

IF CLEANOUT IS INSTALLED AT OR IN DRIVEWAY, CAST IRON OR BRONZE CLEANOUT BOX SHALL BE PLACED IN CONCRETE FLUSH WITH SURFACE OF DRIVE.

Double Cleanout Detail

City of Kerrville
Standard Specifications

SIZE	FSCM NO.	DWG NO.	REV
		480.12	
SCALE		SHEET	

SDR 26
PVC Pipe

PIPE SIZE	5%
6	5.33
8	7.12
10	8.87
12	10.54
15	12.9

NOTE:

*MANDREL MUST HAVE MANUFACTURE ID PLATE INTACT.
*MANDREL MUST HAVE ODD NUMBER OF RUNNERS, 9 MINIMUM.
*AFTER CONSTRUCTION IS COMPLETED, TRUE O.D. DIMENSION FOR THE FULL LENGTH OF "B" TO 0.010 INCH BY TOOL AND LATH OR GRINDING.
*CONTRACTOR MUST PROVIDE PROVING RING.

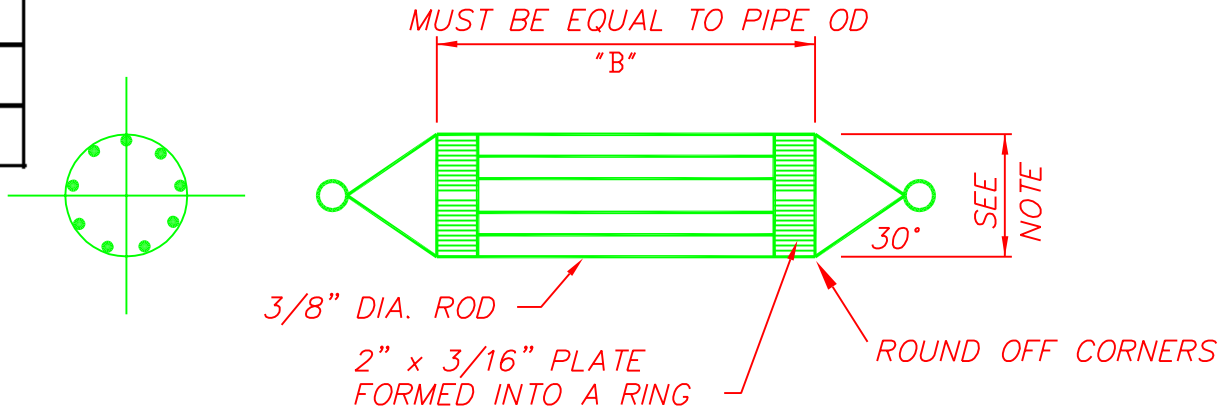

Mandrel Detail			
City of Kerrville Standard Specifications			
SIZE	FSCM NO.	DWG NO. 480.13	REV
SCALE		SHEET	

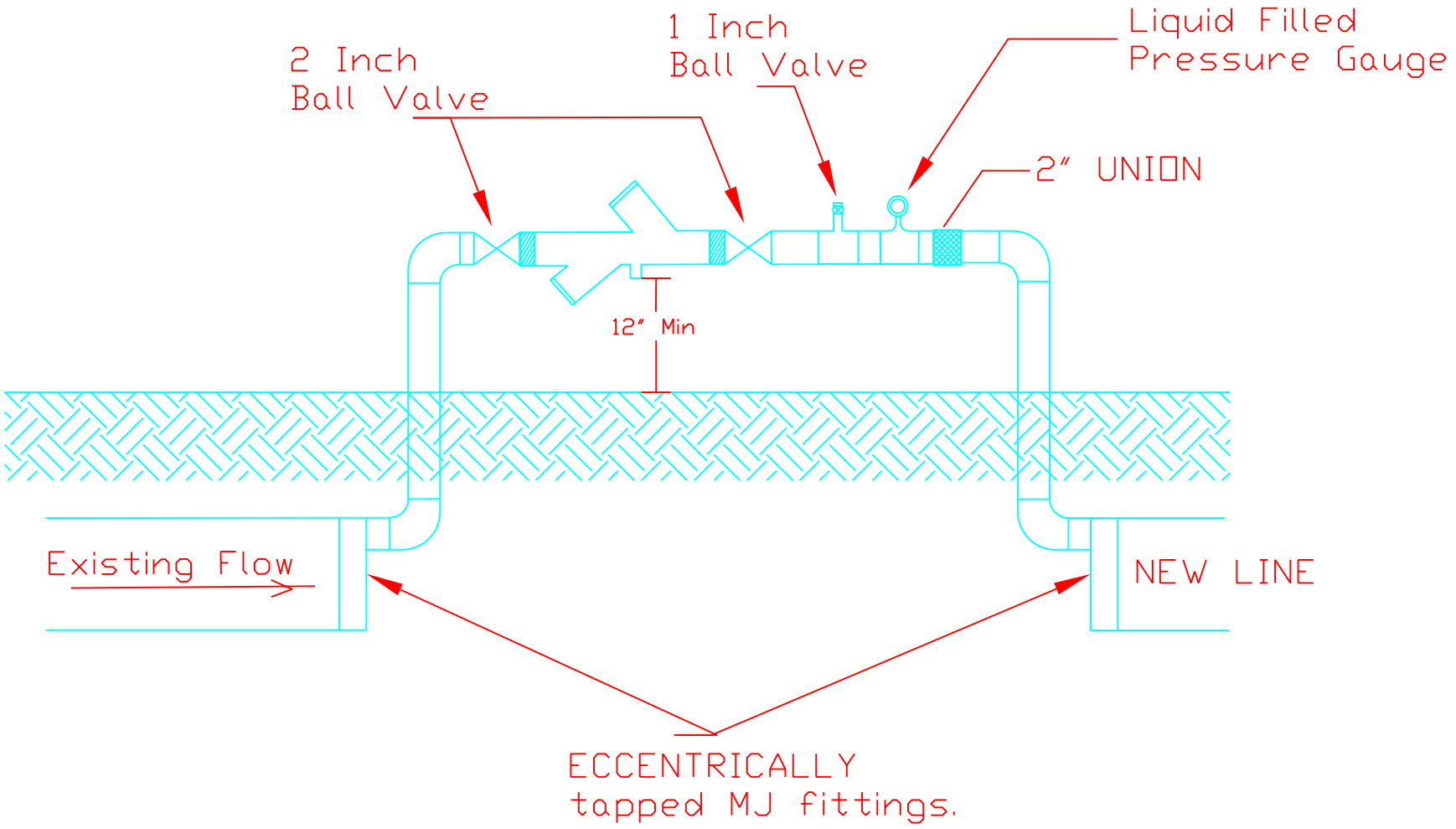

NOTES:

1. All piping configurations of the Backflow Assembly shall be done with Galvanized pipe.
2. BACKFLOW PREVENTION DEVICE (R.P.Z.) designated by City of Kerrville Standard Product List.
3. This installation approved for temporary line loading only.
4. RPZ must be tested according to most recently adopted City of Kerrville plumbing code.

Backflow Prevention for Sewer Main Loading Detail			
City of Kerrville Standard Specifications			
SIZE	FSCM NO.	DWG NO. **480.14**	REV
SCALE		SHEET	

NOTES:
A: HOSE CONNECITON
B: SHUT OFF VALVE
C: THROTTLE VALVE
D: PRESSURE REDUCTION VALVE
E: GAUGE COCK
F: CALIBRATED LIQUID FILLED PRESSURE GAUGE

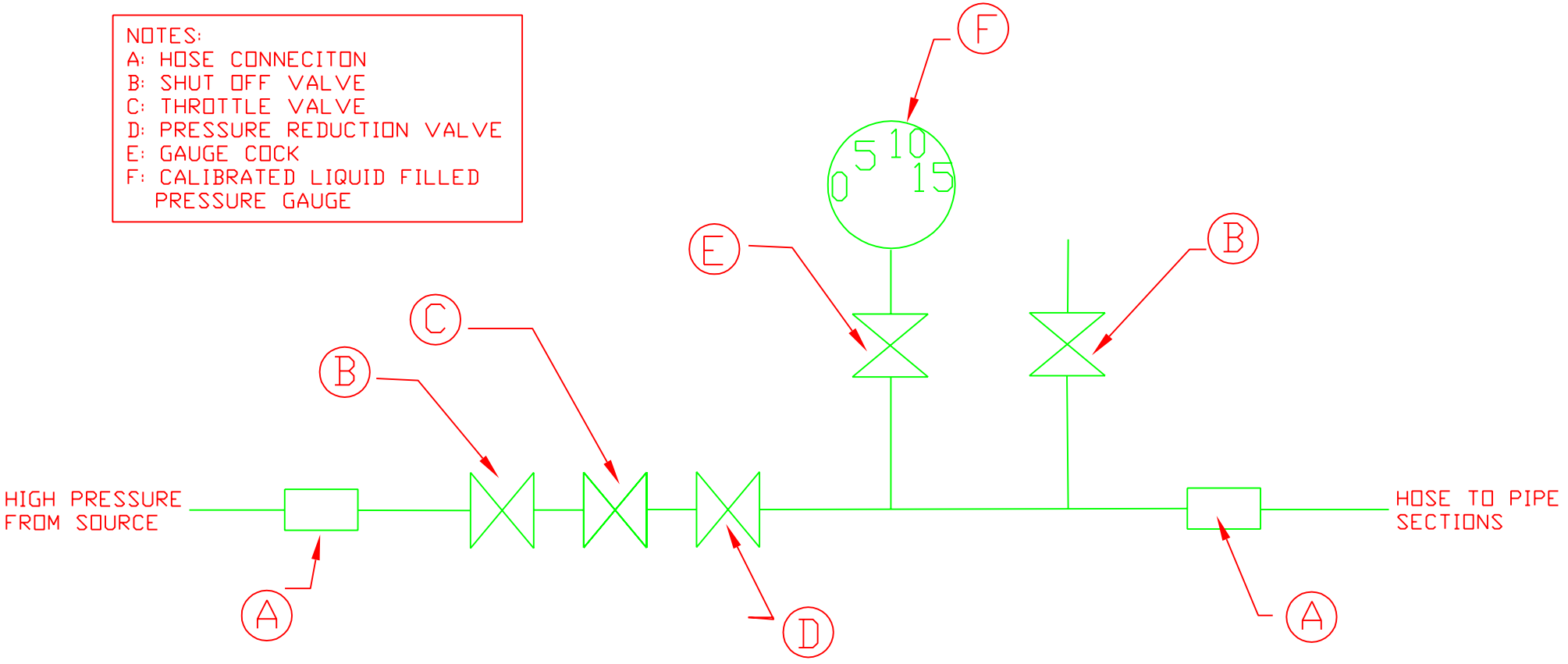

Low Pressure Test Assembly

City of Kerrville
Standard Specifications

SIZE	FSCM NO.	DWG NO.	REV
		480.15	

SCALE		SHEET

Locator Tape shall be 6 inches Wide and be buried at a depth of 2 Feet

Colors shall be as follows:

RED	-	ELECTRIC
ORANGE	-	FIBER/COM
YELLOW	-	GAS
GREEN	-	SEWER
BLUE	-	WATER
PURPLE	_	RECLAIMED WATER

FIBERGLASS (CARSONITE) POSTS (TO BE USED OUTSIDE OF R.O.W., IN OPEN FIELDS, CREEKS, ETC.

Posts to be a minimum 5' tall x 4" wide, Carsonite, and buried 18" deep. Shall bear the words "Caution, Sewer (or Water) Pipeline, Before Digging or in Case of Emergency Call City of Kerrville (830) 257-8000"

Only Sewer or Water Pipeline shall have the City's emergency phone number. Other utilities shall have the appropriate entity (and in some case the water and sewer is not owned by the City of Kerrville). Consult with Kerrville Utility Manager.

Utility Marking Detail

City of Kerrville

Standard Specifications

SIZE	FSCM NO.	DWG NO. 480.16	REV
SCALE		SHEET	

Storm Sewer Specifications
Section 500

510 Design Criteria

511 General Information

All storm drainage facilities including detention/retention ponds shall be designed using the City of Kerrville Design Manual for Storm Drainage Facilities and in conformance with the City of Kerrville Storm Drainage Master Plan which is currently titled Storm Drainage System Study submitted by Hogan & Rasor, Inc., April 1983. Access to storm drainage pipe via junction boxes and manholes shall be as directed by the City Engineer (manholes or junction boxes with manholes every 150 feet and at all bends). These design criteria are minimum requirements to be used in the design of storm sewer systems within the jurisdiction of the City of Kerrville. The jurisdiction of the City of Kerrville is defined as the area bound by the ETJ of the City of Kerrville. This item shall govern the furnishing and placing of reinforced concrete pipe, corrugated metal pipe, and smooth lined helically corrugated metal storm sewer pipe. The pipe shall be installed in accordance with the requirements of these specifications, to the line and grades shown on the construction plans, and shall be of the sizes, types, design and dimensions shown thereon. The installation of pipe shall include all joints or connections to new or existing pipes, manholes, headwalls, inlets, or other appurtences as may be required by the work. All testing shall be in accordance with Section 800 of the City of Kerrville Standard Specifications.

512 Materials

512.01 General: The smallest diameter pipe allowed is an eighteen (18) inch storm pipe. Any engineer requesting to use a pipe smaller than an eighteen (18) inch storm pipe must request approval in writing and submit supporting documentation to the City Engineer. Generally, storm drain pipe smaller than 18" diameter are rejected because they clog with debris so easily making the long term maintenance an issue.

512.02 Reinforced Concrete Pipe: Storm drainage pipe located in public street ROW shall be RCP Type III, however, culverts for driveways may use corrugated metal pipe. Reinforced concrete pipe shall conform to all requirements of ASTM C-76 or C-655 for circular pipe. All pipe shall be machine made or cast by a process which will provide uniform placement of zero slump concrete in the form and compaction by mechanical devices which will assure a dense concrete. Each pipe shall be marked with the pipe class, the date of manufacture, the manufacturer's name, and diameter of pipe. Unless otherwise shown on the plans, not more than two holes may be placed in the top section of the precast

pipe for lifting and placing. After the pipe is in place, lift holes shall be filled with concrete, mortar or precast plugs coated with cold-applied butyl mastic. All pipe joints shall be coated with cold-applied butyl mastic, the use of Ram-Nek is not acceptable. The Consulting Engineer shall submit the proper documentation to the City to justify the selection of the Class, D-load equivalent, of the selected storm sewer pipe. Without such documentation, all reinforced concrete pipe shall be Class III.

512.03 Corrugated Steel Pipe: Storm drainage pipe for driveway culverts or located outside of public street ROW may be corrugated metal pipe. Corrugated metal culvert pipe shall comply with the requirements of AASHTO, Designation M-36, Type I or Type II, or ASTM A-760 for galvanized pipe; or shall comply to the requirements of AASHTO Designation M-245 or ASTM A-762 for polymeric pre-coated pipe. Pipe shall be fabricated from the sheets conforming to AASHTO Designation M-218. Thickness and corrugations, Trade Mark or manufacturer, and specification compliance must be clearly marked on each section of pipe.

512.04 Smooth Lined Helically Corrugated Pipe: The pipe shall be fabricated from flat coils with spelter coating in accordance with AASHTO Designation M-274. The base metal and fabrication shall meet the applicable requirements of AASHTO M-36. Each pipe shall have two welded corrugations rolled in each end. The pipe shall have two lifting lugs on the outside of the pipe. Each pipe shall be marked with the pipe class, the date of manufacture, the manufacturer's name, and diameter of pipe.

512.05 Plastic Pipe Prohibited: The use of any type of plastic pipe for storm drainage purposes is strictly prohibited because it offers no resistance to fire.

512.06 Joints:

A. Reinforced Concrete Pipe: The Contractor shall seal RCP joints with a cold applied butyl mastic. Pipe to be placed along curves shall consist of whatever pipe joint lengths or beveled end joints of pipe, or combination thereof that are required to place the pipe on the designated centerline curve with no more than one-half of the tongue length of the pipe exposed from its normal fully closed joint position. Where pipe joints are not fully closed, special care shall be taken to fill completely, on both inside and outside, the entire annular space at the joint with cement mortar firmly caulked or pressed and compacted to form a dense, tight joint. All mortar shall be composed of one part Portland Cement and not more than two parts sand.

B. Corrugated Steel Pipe: Coupling bands shall conform to the requirements of AASHTO M-36. Field joints for each type of corrugated metal pipe shall maintain pipe alignment during construction and prevent

infiltration of side material during the life of the installation. Coupling bands shall be of the same base metal and coating as the pipe. Coupling bands shall lap equally on each side of the pipes being connected to form a tightly closed joint after installation. Coupling bands shall be placed at every joint when pipe is laid on a curve. Unless otherwise indicated, all bolts for coupling bands shall be ½ inch diameter.

C. Smooth Lined Helically Corrugated Pipe: Coupling bands shall be installed as described under Corrugated Steel Pipe.

513 Measurement

513.01 Storm sewer pipe shall be measured by the linear foot of pipe of the various sizes, regardless of strengths involved. Such measurement shall be made between the ends of the barrel along its flowline.

514 Payment

514.01 The work performed and materials furnished in accordance with this Item as provided under "Measurement" shall be paid for at the unit price bid for "Reinforced Concrete Pipe", "Corrugated Steel Pipe", "PVC Large Diameter Ribbed Pipe", and "Smooth Lined Helically Corrugated Pipe", of the pipe, size and coating specified. The price shall be full compensation for furnishing, hauling, placing, and joining of pipes; for all connections to new and existing structures; for all excavation and backfill; capping at ends of pipe where indicated; and all other items of labor, equipment, materials, tools and incidentals necessary to complete the work in accordance with plans and specifications.

570 Standard Product List

571 Ring & Covers

Ring and Covers		
TYPE	**Manufacturer**	**Size**
Ductile Iron Ring and Cover	Saint Gobain RE60R8FD or approved equivalent must be ductile iron with latching mechanism for tamper prevention. Lid must be printed “Dump No Waste, Drains to River” with an imprint of a fish or other type of aquatic animal on it.	32"
H-20 Rating Minimum		

572 Catch Basin Curb Inlet

Catch Basin Curb Inlet		
TYPE	**Manufacturer**	**Size**
7030Catch Basin Curb Inlet	East Jordan Iron Works or approved equivalent must be cast iron Heavy Duty with Type M3 Grate and T1, T2, T4 or T6 Back and must be printed “Dump No Waste, Drains to River” with an imprint of a fish or other type of aquatic animal on it.	N/A
H-20 Rating Minimum		

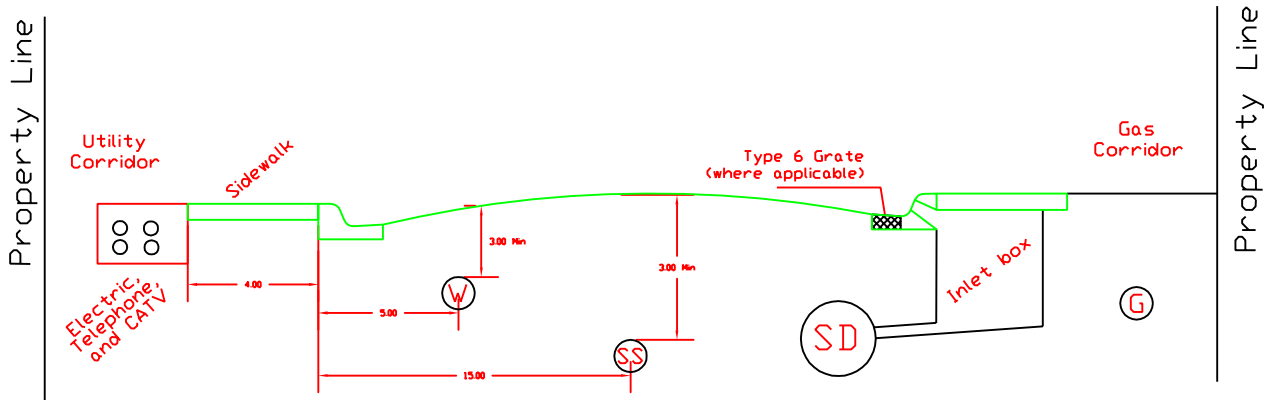

UTILITY CORRIDOR LAYOUT

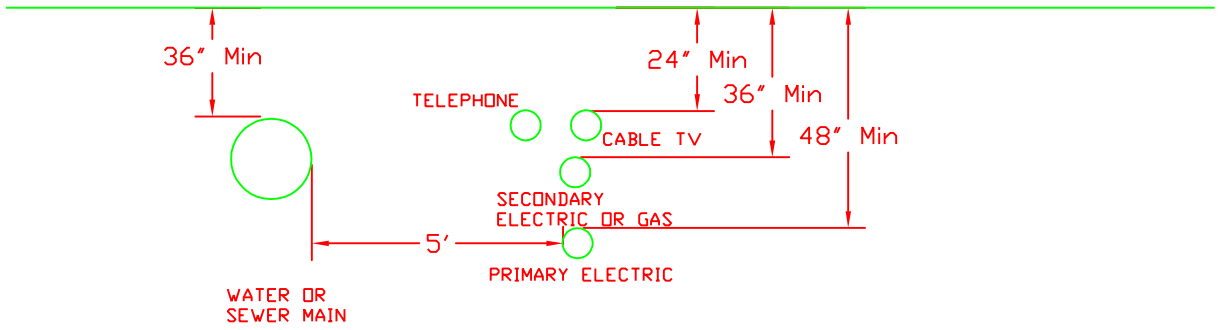

WHERE UTILITIES ARE PARALLEL TO WATER MAIN

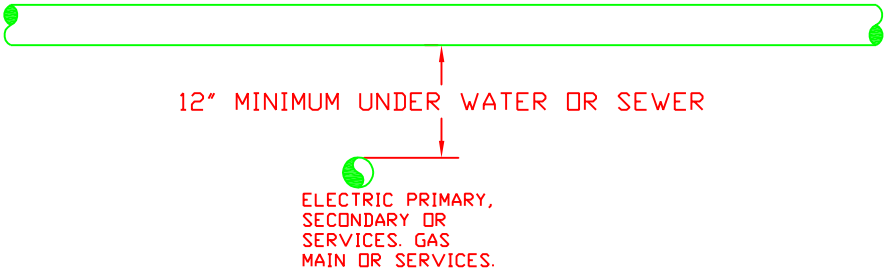

WHERE ELECTRIC OR GAS CROSS WATER MAIN, WATER SERVICE, OR HYDRANT LEAD

NOTE:
ELECTRIC OR GAS SHALL BE PLACED A MINIMUM OF 1 FOOT BELOW SHALLOW SEWER MAINS OR SEWER SERVICES THAT ARE 48" OR LESS IN DEPTH.

Utility Corridor Layout Details			
City of Kerrville Standard Specifications			
SIZE	FSCM NO.	DWG NO. 580.01	REV
SCALE		SHEET	

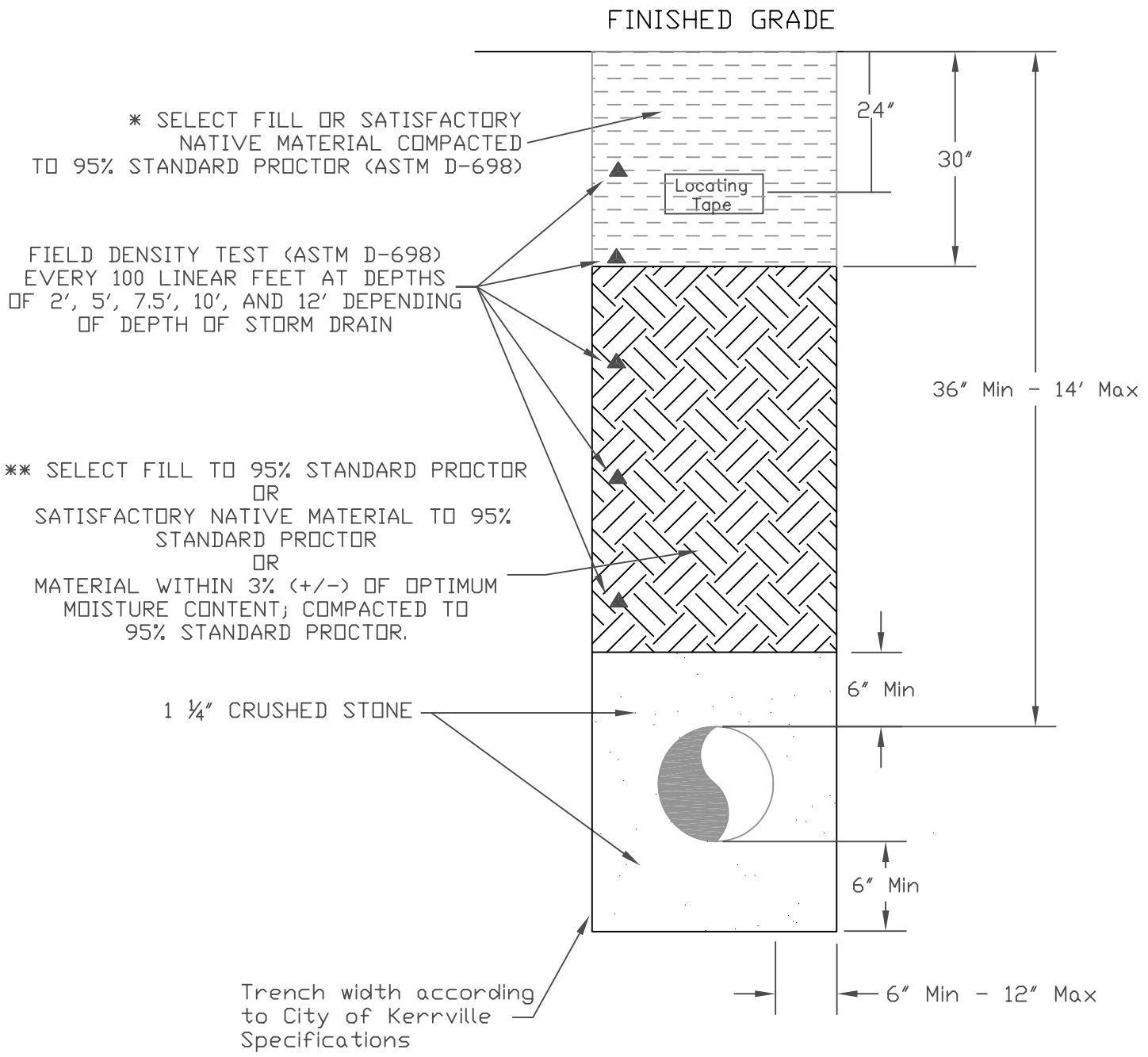

INSTALLATION OF PIPE TO FOLLOW CITY OF KERRVILLE SUBDIVISION SPECIFICATIONS

NOTES:

* MOISTURE SENSITIVE MATERIAL COMPACTED TO 95% STANDARD PROCTOR AND WITHIN 3% (+/-) OF OPTIMUM MOISTURE CONTENT MAY BE USED WHERE WATER LINE IS NOT UNDERNEATH PAVEMENT.

** MODIFIED PROCTOR (ASTM D-1557) MUST BE USED AT DEPTHS GREATER THAN 10 FEET.

▲ REPRESENTS FIELD DENSITY TEST LOCATION

Storm Drain Embedment & Field Density Testing

City of Kerrville
Standard Specifications

SIZE	FSCM NO.	DWG NO.	REV
		580.02	
SCALE		SHEET	

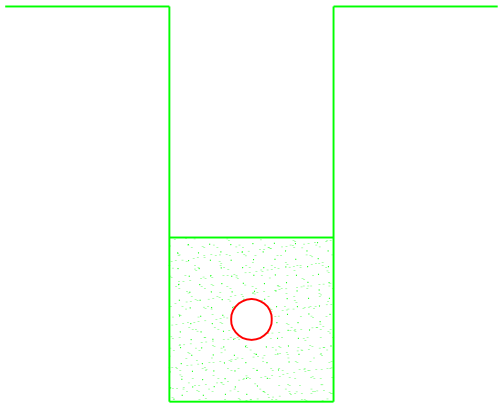

Ⓐ Trench cut with utility installed with granular material compacted to 95% Standard Proctor. (ASTM D-698)

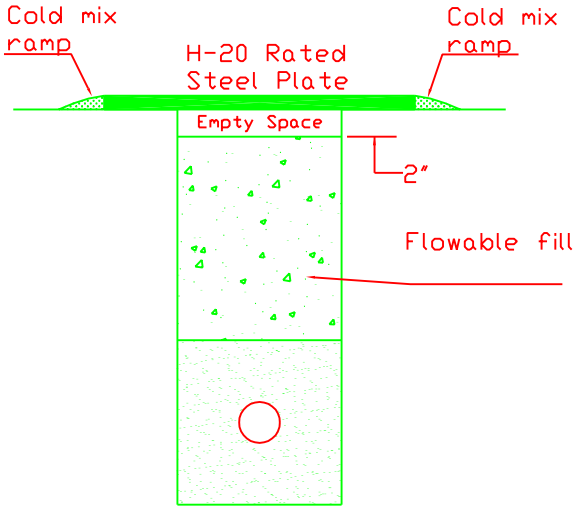

Ⓑ Backfill with 2-sack Flowable fill to within 2 inches of surface and steel plate until mixture is cured. Plate must be pinned or secured to surface.

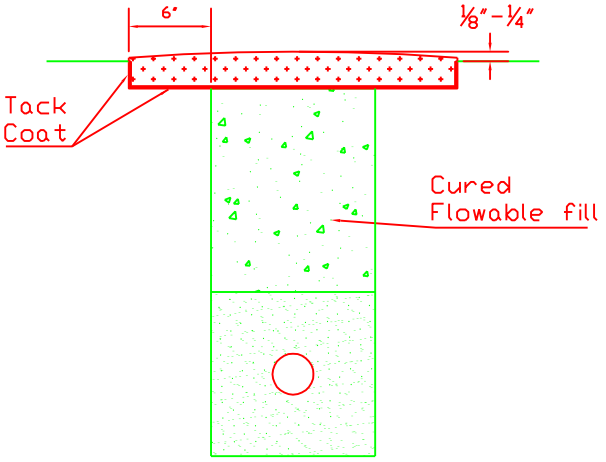

Ⓒ Sawcut edge of asphalt trench 6 inches wider than excavated trench width, apply Tack Coat to all surfaces, lay down hot or cold mix according to chart, compact to smooth surface.

*Cold mix asphalt shall be "Type D" (Fine Surface) Limestone Rock Asphalt from Vulcan Materials Company.

Patch Width or Tons of Asphalt	Asphalt Type	Method of Compaction
Less than 24" and less than 10 tons of Asphalt	Hot or *Cold Mix	Plate Compactor
Greater than 24" and less than 10 tons of Asphalt	Hot or *Cold Mix	Steel Wheel Roller (1 ½ ton or greater)
Greater than 10 tons of Asphalt	Hot Mix Only	Steel Wheel Roller (1 ½ ton or greater)
Greater than 48" width and more than 30 tons of Asphalt	Hot mix only placed with Laydown machine	Steel Wheel Roller (6 tons or greater)

Ⓓ Refer to City of Kerrville Standard Specification Book, Section 200 for additional details on materials and placement requirements.

Pavement Repair Details

City of Kerrville

Standard Specifications

SIZE	FSCM NO.	DWG NO.	REV
		290.06 b	
SCALE		SHEET 2 of 2	

Pipe and Appurtenances
Section 600

610 General Requirements

611 Description

These design criteria are minimum requirements to be used in the design of piping and appurtenances within the jurisdiction of the City of Kerrville. The jurisdiction of the City of Kerrville is defined as the area bound by the ETJ of the City of Kerrville. This section describes excavation and trenching work for pipe and appurtenances to be installed under these specifications and shall include the necessary site preparation, excavation and trenching, the handling, storage, shoring and protection of the work, preparation of the subgrades, pumping and dewatering as necessary or required, protection of adjacent property, backfilling, pipe embedment, and other incidentals necessary to complete the work.

Excavation work shall be performed in a safe and proper manner with suitable precautions being taken against hazards of every kind. Excavations shall provide adequate working space and clearances for the work to be performed therein and for installation, and shall be in compliance with the latest OSHA regulations for Trench Safety.

Prior to commencing this Work, all erosion control and tree protection measures required shall be in place and all utilities located and protected

612 Classification of Excavated Material

612.01 Common Excavation: Materials that can be removed by standard construction methods and/or equipment.

612.02 Rock Excavation: All masses of material which cannot be removed by standard construction methods and/or equipment thereby requiring special equipment, or blasting for excavation, shall be considered rock excavation.

613 Grades, Lines and Levels

Grades, lines and levels shall conform to the approved construction plans approved by the City of Kerrville Engineering Department. The surveyor will set all necessary stakes required by the specifications and/or the construction plans. Any damage to the above by the Contractor shall be re-established at the Contractor's expense. The Contractor/Engineer shall furnish copies of all field notes and "cut sheets" to the City.

The location of the lines and grades indicated may be changed only by direction of the Engineer and it is understood that the Contractor will be paid on the basis of his unit Contract prices bid for such Work actually performed and shall make no claim for damages or loss of anticipated profits due to the change of location or grade.

The Contractor shall furnish, at his expense, all necessary electronic devices or batter boards for controlling the Work. Electronic devices shall have adequate precission to produce a finished pipe on grade. Batter boards shall be of adequate size material and shall be supported substantially. Control stakes must be protected from possible damage or change of location. The Contractor shall furnish good target for electronic devices, sound twilled lines for use in achieving lines and grades and the necessary plummets, levels and graduated poles.

Should the Contractor's procedures not produce a finished pipe placed to grade and alignment, the pipe shall be removed and relayed and the Contractors procedures modified to the satisfaction of the City of Kerrville Inspector. No additional compensation shall be paid for the removal and relaying of pipe required above.

620 Materials

621 General

This item shall consist of furnishing and installing all pipe and/or materials for constructing pipe mains, sewers, laterals, stubs, inlet leads, service connections and culverts, including all applicable Work such as excavating, bedding, jointing, backfilling materials, tests, concrete trench cap, concrete cap and encasement, etc. The pipe shall be of the sizes, types, class and dimensions indicated or as designated by the Engineer and shall include all joints or connections to new or existing mains, pipes, sewers, manholes, inlets, structures, etc., as may be required to complete the Work in accordance with specifications and published standard practices of the trade associations for the material specified and to the lines and grades indicated. This item shall include any pumping, bailing, drainage and Trench Safety Systems for trench walls, when indicated or applicable. Unless otherwise provided, this item shall consist of the removal and disposition of trees, stumps and other obstructions, old structures or portions thereof such as house foundations, old sewers, masonry or concrete walls, the plugging of the ends of abandoned piped utilities cut and left in place and the restoration of existing utilities damaged in the process of excavation, cutting and restoration of pavement and base courses, the furnishing and placing of select bedding, backfilling and cement or lime stabilized backfill, the hauling and disposition of surplus materials, bridging of trenches (metal plates) and other provisions for maintenance of traffic or access as indicated.

622 Backfill Materials

622.01 General: The Contractor shall submit descriptive information and evidence that the materials and equipment the Contractor proposes for incorporation into the Work is of the kind and quality that satisfies the specified functions and quality.

Select Fill – Consist of materials which are classified by ASTM D 2487 as SP, SM, SC, CL, or dual classifications thereof, which have a liquid limit less than or equal to 35, a plasticity index (as determined by ASTM D-4318) of a minimum of 5 and a maximum of 15, a maximum aggregate size of 3 inches, 25 to 50 percent retained on the No. 4 sieve, 50 to 75 percent retained on the No. 40 sieve, and are free of organic materials.

Moisture Sensitive Material - Material with PI of 20 or greater (as determined by ASTM D-4318) and 35% or more passing the #200 sieve (as determined by ASTM D-1140).

Satisfactory Native Material - Material classified by ASTM D 2487 as GW, GP, GC, GM, SW, SP, SM, SC, CL, CH, and is free of rocks larger than three (3") inches and is not 'Moisture Sensitive Material' shall be classified as Satisfactory Native Material.

Unsatisfactory Materials - Materials that do not comply with the requirements for satisfactory material. Unsatisfactory materials include but are not limited to those materials containing roots and other organic matter, trash, debris, frozen materials and stones larger that three (3") inches and materials classified in ASTM D2487 as PT, OH, OL, ML, and MH. Unsatisfactory materials also include man-made fills, refuse, or backfills from previous construction.

622.02 Bedding Material

A. Pea Gravel – For water and sewer mains

Pipe bedding shall be clean 3/8" to 1/2" pea gravel free of mud, clay, vegetation or other debris.

B. 3/4" Crushed Stone – For water and sewer mains

Pipe bedding shall be clean 1/2" to 3/4" crushed limestone free of mud, clay, vegetation or other debris.

C. 1 1/4" Crushed Stone – For storm drainage pipe

Pipe bedding shall be clean 1 1/8” to 1 1/4" crushed limestone free of mud, clay, vegetation or other debris.

622.03 Trench Backfill Material:

A. Select Fill

This material shall consist of imported or excavated from the trench and it shall conform to paragraph 622.01 of this section. Select fill may be used as backfill at any depth for any trench.

B. Satisfactory Native Material

This material shall consist of suitable material excavated from the trench. It shall conform to paragraph 622.01 of this section. Satisfactory native material may be used as backfill at any depth for any trench.

C. Moisture Sensitive Material

This material consists of material excavated from the trench and conforms to the definition in paragraph 622.01 of this section. The moisture content at the time of compaction shall be within 3 percent of optimum as determined by ASTM D-698 or will require wetting (or drying) and reworking as necessary. Under pavement, moisture sensitive material may only be used as backfill in portions of the trench that are deeper than 2.5 feet. Where the trench is not under pavement, moisture sensitive material may be used as backfill all the way to the surface.

D. Cement Stabilized Backfill

When indicated or directed by the Engineer, all backfill shall be with cement-stabilized backfill rather than the usual materials. Unless otherwise indicated, cement stabilized backfill material shall consist of a mixture of portland cement and aggregates and shall be thoroughly dry mixed with no water added to the mixture except as may be directed by the Engineer.

630 Trench Excavation

631 General

631.01 Trench Opening: The Contractor shall open no more trench in advance of pipe laying than is necessary to expedite the work. The maximum length of open trench permitted on any line under construction shall not exceed the amount of pipe that can be placed in the same day of excavation.

631.02 Trench Safety: Underground piped utilities shall be constructed in an open cut in accordance with Federal regulations "Trench Safety Systems" and with a trench width and depth described below.

631.03 Trench Fill: When pipe is to be constructed in fill above the natural ground, Contractor shall construct embankment to plan grade and meet compaction requirements, and then the trench can be excavated.

632 Excavated Materials

632.01 General: Excavated material from trenching may be used as the satisfactory native material for backfilling the trench, provided the material meets Section 622 specifications.

No excavated material shall be deposited on the site of the work or other improved areas, nor upon private property unless approved by the City Engineer, and such material shall be handled in such a manner as not to obstruct drainage or other parts of the project. Where necessary for compliance with this provision, the material shall be hauled or removed by an approved method.

632.02 Surplus Excavated Materials: Any surplus excavated materials shall be hauled and disposed of as directed by the Engineer. If the Engineer notifies the Contractor that there is no use for this material on the project it shall become the property of the Contractor to be disposed of without injury to the Owner's or any adjoining property at the Contractor's expense.

633 Trench Width

633.01 Water & Wastewater Lines: Trenches for pipes shall be of sufficient width to provide ample working space for handling and jointing the pipe in the trenches. In no case shall the width of the trench inside sheeting and brace lines be less than sixteen (16") inches greater than the normal pipe diameter as follows:

Pipe Diameter	Min Trench Width	Max Trench Width
6"	22"	30"
8"	24"	30"
10"	26"	32"
12"	28"	36"
18"	34"	42"
24"	40"	48"

633.02 Storm Sewer Lines: Trenches for Storm Sewers up to 42 inches shall have a width of 1 foot on each side beyond the outside surfaces of the pipe. Pipes more

than 42 inches shall have a trench width not to exceed 18 inches on each side beyond the outside surfaces of the pipe.

633.03 Excessive Trench Width: If the trench width within the pipe zone exceeds this maximum, the entire pipe zone shall be refilled with approved backfill material, thoroughly compacted to a minimum of 95 percent of maximum density as determined by ASTM D-1557 and then re-excavated to the proper grade and dimensions. Excavation along curves and bends shall be so oriented that the trench and pipe are approximately centered on the centerline of the curve, using short lengths of pipe and/or bend fittings if necessary.

Where, for any reason, width of the lower portion of the trench as excavated at any point exceeds the maximum permitted, either pipe of adequate strength, special pipe embedment, or arch concrete encasement, as required by loading conditions and as determined by the Engineer, shall be furnished and installed by and at the expense of the Contractor.

633.04 Excavation Below Pipe Subgrade: Except when so ordered by the Engineer, pipe trenches shall not be excavated below pipe subgrade elevations, in which event the bottom of the trench shall be bedded with sandy or acceptable material.

633.05 Bell Holes: Bell holes shall provide adequate clearance for the tools and methods used in installing the pipe. No part of any bell or coupling shall be in contact with the trench bottom or trench walls when the pipe is jointed.

634 Trench Depth and Depth of Cover

634.01 General: All pipe and in-line appurtenances shall be laid to the grades indicated. The depth of cover shall be measured from the established finish grade, natural ground surface, subgrade for staged construction, street or other permanent surface to the top or uppermost projection of the pipe.

634.02 Water Piping: Where not otherwise indicated, all water piping shall be laid with at least 3 feet of cover and no more than 5 feet of cover.

634.03 Wastewater Piping: Where not otherwise indicated, all gravity wastewater piping shall be laid with at least 3.5 feet of cover. Force mains shall be laid with minimum 3 feet and maximum of 5 feet of cover.

634.04 Stormwater Piping: Where not otherwise indicated, all stormwater piping shall be laid with at least 1 foot of cover.

640 Pipe Embedment

641 General Requirements

Bedding material shall be used to fill up to a point at least six (6) inches below and above the outside diameter of the pipe. Select Fill and Satisfactory Native Material (defined in Section 622.01) may be used to backfill the remaining depth of the trench; Moisture Sensitive Material may be used to backfill up to depths of 2.5 feet, however, the remainder of the trench shall be backfilled with either Select Fill or Satisfactory Native Material.

642 Compaction & Moisture Requirements

For depths of cover 10 feet and less both the bedding material and the satisfactory native materials shall be compacted to 95-100% of the standard proctor density as determined by ASTM D698 and within 3% (+ or -) of optimum moisture content if the material is “Moisture Sensitive” as defined in Section 622.01.

Each layer of backfill material, if dry, shall be wetted uniformly to the moisture content required to obtain the specified density and shall be compacted to that density by approved mechanical means. The use of wheel compactors may be allowed in lieu of hand operated mechanical compactors with authorization from the Construction Inspector. When wheel compactors are used, backfill lifts may be increased to twelve (12") inches provided proper moisture content of the backfill material is maintained and the specified minimum density is achieved. All testing required to validate that adequate compaction is being achieved by the use of the wheel compactor shall be at the expense of the Contractor.

Water tamping by flooding or jetting the trench prior to placing the remainder of the trench backfill may not be used in lieu of hand or mechanical tamping (flooding or jetting only achieves densities in the range of 70-75% which is not acceptable).

The City may perform or have performed any material tests needed as indicated by the situations described below. The Contractor will be charged for all testing regardless of whether or not the test passes or fails. The Contractor will also be charged for all retesting necessitated by failures. Situations requiring testing are as follows:

A. In determining whether or not minimum density is being achieved.
B. Visual inspection by the Construction Inspector shows poor quality, workmanship or materials.
C. Inspector was not notified of backfill operation.
D. In all trenches placed in a proposed or existing roadway.

E. Any other unusual circumstance that causes the Inspector to doubt the quality of the workmanship or materials.

650 Construction Methods

651 General

The Contractor shall conduct his Work such that a reasonable minimum of disturbance to existing utilities will result. Particular care shall be exercised to avoid the cutting or breakage of all existing utilities. If at any time the Contractor damages the utilities in place through his operations, the Contractor shall immediately notify the owner of the utility to make the necessary repairs.

The Contractor shall inform utility owners sufficiently in advance of the Contractor's operations to enable such utility owners to reroute, provide temporary detours or to make other adjustments to utility lines in order that the Contractor may proceed with his Work with a minimum of delay and expense. The Contractor shall cooperate with all utility owners concerned in effecting any utility adjustments necessary and shall not hold the City liable for any expense due to delay or additional Work because of conflicts arising from existing utilities.

The Contractor shall do all trenching in accordance with the provisions and the directions of the Engineer as to the amount of trench left unfilled at any time. All excavation and backfilling shall be accomplished as indicated and in compliance with State Statutes.
Where excavation for a pipeline is required in an existing City street, control of traffic shall be as indicated in accordance with the Texas Manual on Uniform Traffic Control Devices.

Wherever existing utility branch connections, sewers, drains, conduits, ducts, pipes or structures present obstructions to the grade and alignment of the pipe, they shall be permanently supported, removed, relocated or reconstructed by the Contractor through cooperation with the owner of the utility, structure or obstruction involved. In those instances where their relocation or reconstruction is impractical, a deviation from line and grade will be ordered by the Engineer and the change shall be made in the manner directed.

Adequate temporary support, protection and maintenance of all underground and surface utility structures, drains, sewers and other obstructions encountered in the progress of the Work shall be furnished by the Contractor, at his expense and as approved by the Engineer.

Where traffic must cross open trenches, the Contractor shall provide suitable steel plates of the thickness directed by the Engineer. Adequate provisions shall be made for the flow of sewers, drains and watercourses encountered during

construction and any structures which may have been disturbed shall be satisfactorily restored upon completion of Work.

When rainfall or runoff is occurring or is forecast by the U.S. Weather Service, the Contractor shall not perform or attempt any excavation or other earth moving Work in or near the flood plain of any stream or watercourse or on slopes subject to erosion or runoff, unless given specific approval by the Engineer

652 Water / Sewer Line Separation

652.01 Water and Sewer Crossings: Installation shall comply Section 700 of the Standard Specifications.

652.02 Utility and Storm Sewer Crossings: When the Contractor installs a pipe that crosses a drainage structure or storm sewer and the top of the pipe is within 18 inches of the bottom of the structure, the pipe shall be encased in concrete for a distance of at least 1 foot on either side of the ditch line of the utility structure or the storm sewer.

653 Pipe Anchorage, Support and Protection

Pressure pipeline tees, plugs, caps and bends shall be securely anchored with both Mega Lugs and a suitable concrete thrust blocking.

653.01 Concrete Thrust Blocking: Concrete thrust blocking shall conform to the details of these specifications. Concrete blocking shall be placed between solid ground and the fitting to be anchored. The area of bearing on the pipe and on the ground shall be as indicated or directed by the Engineer. The blocking shall, unless otherwise indicated, be so placed that the pipe, fittings and joints will be accessible for repair.

The pipe and fittings shall be adequately weighted and laterally braced to prevent floating, shifting or straining of the pipeline while the concrete is being placed and taking initial set. The Contractor shall be solely responsible for the sufficiency of such restraints.

653.02 Metal Thrust Restraint: Fabricated thrust restraint systems such as those described below may be approved for use instead of concrete blocking. To obtain approval, the project Drawings must include sufficient drawings, notes, schedules, etc., to assure that the proposed restraints as installed will be adequate to prevent undesirable movement of the piping components. Such restraint systems may only be used where and as specifically detailed and scheduled on approved Project Drawings.

A. Restrained Joints: Piping or fitting systems utilizing integral mechanically restrained joints may be approved. All components of such systems shall be standard manufactured products fabricated from cast

ductile iron, hot-dip galvanized steel, brass or other corrosion resistant materials and the entire assembly shall be protected with a continuous film wrap.

Location, configuration and description of such products shall be specifically detailed on the Drawings. (Add-on attachments such as retainer glands, all-thread rods, etc., are not acceptable.)

B. Concrete Encasement, Cradles, Caps and Seals: When trench foundation is excessively wet or unstable or installation of water or wastewater pipe will result in less than 30 inches of cover, Contractor shall notify Engineer. Engineer may require Contractor to install a concrete seal, cradle, cap, encasement or other appropriate action.

C. Trench Caps, Concrete Rip-Rap and Shaped Retards: Where called for by the Contract or as directed by the Engineer, concrete trench caps, concrete rip-rap and/or shaped retards shall be placed as detailed by the Drawings as protection against erosion. Concrete material and placement shall be Class B, Section 900, "Concrete for Structures".

654 Connections to Existing Systems

654.01 Wastewater Connections: All branch connections of new main lines shall be made by use of manholes. Service stubs shall be installed as indicated in the details, utilizing a 45 degree bend with a wye or a sanitary tee(long sweep). Minimum grade shall be 1 percent downward to main and minimum cover shall be 30 inches at the curb. A double clean-out shall be installed at the property line with a one foot stub-out. Glued-caps shall be installed on the stub-outs before backfilling.

Where not otherwise indicated, (wastewater) service connections shall be installed so that the outlet is at an angle of not more than 45 degrees above horizontal at the main line.

Unless otherwise specified by the Engineer, all connections made to existing mains shall be made at manholes with the flowline of the inlet pipe installed at the same elevation as the flowline of the existing pipe.

Connections to existing manholes shall conform to TNRCC requirements and shall only be made by boring through the manhole wall.

654.02 Water System Connections: The Contractor shall, at his expense, make all necessary connections of new piping or accessories to the existing water system. To minimize any inconvenience from outages, the Contractor shall tap all mains using an approved tapping sleeve (full circle stainless steel wrap-around) and tapping valve.

In instances which require shutoffs on existing water mains, the City will make the shut-off. The Contractor shall be required to notify the Engineer's field representative on the job at least 72 hours prior to the desired time for any shutoff. The Contractor will notify any affected utility customers at least 24 hours prior to the shutoff. The Water Utility will make the shutoff after ensuring that all appropriate measures have been taken to protect the water system, customers and employees.

Water for the Work shall be metered and furnished by the Contractor. However, the cost of metered water shall be absorbed by the City on Capital Improvement Projects. Should it be determined that the Contractor excessively wastes water, then billing charges shall be forwarded to the Contractor.

The Contractor shall make all pressure taps called for by the Contract Documents or required to complete the Work. A pressure tap shall consist of connecting new piping to the existing water system by drilling into the existing pipe while it is carrying water under normal pressure without taking the existing piping out of service.

Unless otherwise provided by the Contract, the Contractor shall, at his expense, perform all necessary excavation, furnish and install the tapping sleeve, valve and accessories, provide the tapping machine, drill the tap and shall block, anchor and backfill the piping, valve and all accessories, place the new piping in service and perform all site cleanup. When the City makes the tap, City forces are not obligated or expected to perform any Work except to provide tapping machine and drill the actual hole. If City crews are to make the tap, fiscal arrangements must be made in advance.

If a private Contractor makes the tap, a City of Kerrville Inspector must be present.

Service connection taps into PVC or AC pipe or into CI or DI pipe 12 inches or smaller shall be made using tapping sleeve as recommended by the pipe manufacturer and as approved by the Engineer.

All water service connections shall be installed so that the outlet is at an angle of not more than 45 degrees above horizontal at the main line.

Precautions should be taken to ensure that the tapping saddle or sleeve is placed on the pipe straight to prevent any binding or deformation of the PVC pipe. Tapping shall be performed with a sharp shell type cutter so designed that it will smoothly penetrate heavy walled PVC and AC pipe and will retain and extract the coupon from the pipe.

655 Concrete Encasement and Encasement Pipe

655.01 General: This item shall govern the furnishing of materials and the methods of constructing a portland cement concrete encasement or encasement pipe.

655.02 Submittals: The submittal requirements of this specification item include:

A. Type, of pipe, construction methods and sequence,

B. Aggregate types, gradations and physical characteristics for the Portland cement concrete mix,

C. Proposed proportioning of materials for the mortar mix.

655.03 Materials: The Portland cement concrete shall conform to Class B Concrete. The cement stabilized sand shall have a minimum of 10% (2.5 bags min.) cement per cubic yard and shall contain brown coloring for identification. (TNRCC Section 290)

655.04 Construction Methods: When indicated on the Drawings or acceptable to Engineer or designated representative, concrete encasement shall be placed to protect the pipe. Pipe or bedding shall not be placed where:

A. the top of the pipe would have less than 30 inches of cover,

B. the ground water invades the trench, or

C. the trench bottom is of unstable material.

If either of these conditions is encountered, the Engineer or designated representative shall be notified and may direct the Contractor to:

A. encase the pipe with concrete,

B. change pipe material, or

C. use a higher strength class of pipe.

Concrete encasement shall extend from 6 inches below to 6 inches above the outer projections of the pipe over the entire width of the trench in accordance with the City of Kerrville Standard Details.

656 Concrete Retards

656.01 Description: This item to consist of Portland Cement concrete retards used to anchor pipe. Retards shall be constructed as indicated or as designated by Engineer in accordance with these specifications.

656.02 Materials:

A. Concrete: Concrete materials used in construction under this item shall conform to Class B.

B. Reinforcement: Reinforcement shall conform to Section 944.

656.03 Construction Methods: Prior to placing concrete, excavation for retards shall be made to proper section and, if considered necessary by Engineer, bottom of excavation shall be hand tamped and sprinkled. Excavated area for retards shall be moist when concrete is placed.

After concrete has been placed, compacted and shaped to conform to dimensions indicated and after it has become sufficiently set, it shall be given a moderately rough finish by floating with a wood float.

No mortar or concrete work shall be done when temperature is below 40° F and work shall be protected from freezing. After completion of retard, exposed surfaces shall be covered with burlap, cotton mats or other approved covering and kept wet for a period of 3 days. White pigmented curing compound conforming to Section 921.02(e), "Membrane Curing", Type 2, will be permitted when applied to exposed surfaces.

Material excavated from trench shall be uniformly spread on adjacent areas or otherwise disposed of at a permitted site.

657 Blasting

Blasting or other use of explosives for excavation will not be permitted on the site of the work without specific written approval by the City Engineer and the City Fire Marshall.

658 Removal of Water

The Contractor shall provide and maintain adequate dewatering equipment to remove and dispose of all surface and ground water entering excavations, trenches, or other parts of the work. Each excavation shall be kept dry during subgrade preparation and continually thereafter until the pipe to be installed therein is completed to the extent that no damage from hydrostatic pressure, flotation, or other causes will result.

Surface water shall be diverted or otherwise prevented from entering excavated areas or trenches to the greatest extent practicable without causing damage to adjacent property.

The Contractor will be held responsible for the condition of any pipe which may be used for drainage purposes, and all such pipe shall be kept clean and free from sediment.

659 Backfilling

659.01 General: Special emphasis is placed upon the need to obtain uniform density throughout the backfill material. The maximum lift of backfill shall be determined by the compaction equipment selected and in no case shall it exceed 12 inches, loose measurement.

No heavy equipment, which might damage pipe, will be allowed over the pipe until sufficient cover has been placed and compacted. All internal pipe bracing installed or recommended by the manufacturer shall be kept in place until the pipe bedding and trench backfill have been completed over the braced pipe section.

659.02 Backfill in Street Right of Way: The depth of layers, prior to compaction, shall depend upon the type of sprinkling and compacting equipment used and the test results thereby obtained, but shall not be more than one (1) foot loose. Prior to and in conjunction with the compaction operation, each layer shall be brought to the moisture content necessary to obtain the required density and shall be kept level to insure uniform compaction over the entire layer. Testing for density shall be in accordance with ASTM D-698 and ASTM D-1557.

Each layer of backfill must provide the density as required herein and shall be sprinkled as required and compacted to the extent necessary to provide not less than 95 percent of the density as determined in accordance with ASTM D-698 or ASTM D-1557 depending on the depth (see standard drawings for water, sewer and storm drainage pipe).

After each layer of backfill is complete, tests may be required by the City Engineer. If the material fails to meet the density indicated, the course shall be reworked as necessary to obtain the indicated compaction and the compaction method shall be altered on subsequent Work to obtain indicated density.

At any time, the City Engineer may order proof rolling to test the uniformity of compaction of the backfill layers. All irregularities, depressions, weak or soft spots that develop shall be corrected immediately by the Contractor.

Should the backfill, due to any reason, lose the required stability, density or finish before the pavement structure is placed, it shall be recompacted and refinished at the sole expense of the Contractor. Excessive loss of moisture in the subgrade shall be prevented by sprinkling, or sealing. Excessive loss of moisture in Moisture Sensitive Material shall be construed to exist when the subgrade soil moisture content is more than 3 percent below the optimum of compaction ratio density. Backfill shall be placed from the top of the bedding material to the existing grade, base course, subgrade or as indicated. The remainder of the street

backfill shall be Flexible Base, Concrete or Hot Mix Asphalt Concrete as indicated or to replace the same kind of surface removed to construct the pipe.

659.03 Backfill in State Highway Right of Way or County Street: All Work within the right of way shall meet the requirements of above as a minimum and shall meet the requirements of the permit issued by the County when their requirements are more stringent. Prior to the start of construction, the Contractor shall be responsible for contacting the appropriate TxDOT office or Kerr County Road & Bridge Office and for coordinating his activities with the operating procedures in effect for utility cut permits and pavement repair under their jurisdiction. Approval for all completed Work in the State or County right of way shall be obtained from the appropriate Official prior to final payment by the Owner.

659.04 Backfill in Easements: Where not otherwise indicated, the Contractor may select whatever methods and procedures may be necessary to restore entire Work area to a safe, useful and geologically stable condition with a minimum density of 95 percent or a density superior to that prior to construction.

All soil areas disturbed by construction shall be covered with topsoil and seeded. All turf within city right-of-way shall obtain seventy (70) percent coverage before final acceptance and erosion control structures are removed. All turf, drainways and drainage structures shall be constructed or replaced to their original condition or better. No debris shall remain in the drainways or drainage structures.

660 Specialized Construction Methods

661 Setting Valves, Drains and Air Releases: Unless otherwise indicated, main line valves, drain valves and piping, air and vacuum release assemblies and other miscellaneous accessories shall be set and jointed in the manner described for cleaning, laying, and jointing pipe.

Unless otherwise indicated, valves shall be set at the locations shown on the Drawings and such that their location does not conflict with other appurtenances such as curb ramps. Valves shall be installed so that the tops of operating stems will be at the proper elevation required for the piping at the location indicated above. Valve boxes and valve stem casings shall be firmly supported and maintained, centered and aligned plumb over the valve or operating stem, with the top of the box or casing installed flush with the finished ground or pavement in existing streets, and installed with the top of the box or casing approximately 6 inches (150 mm) below the standard street subgrade in streets which are excavated for paving construction or where such excavation is scheduled or elsewhere as directed by the Engineer or designated representative.

662 Setting Fire Hydrants: Fire hydrants shall be located in a manner to provide accessibility and in such a manner that the possibility of damage from vehicles or conflict with pedestrian travel will be minimized. Unless otherwise directed, the setting of any hydrant shall conform to the following:

Hydrants between curb and sidewalk on public streets, shall be installed as shown on details, with outermost point of large nozzle cap 6" to 18" behind back of curb. Where walk abuts curb, and in other public areas or in commercial areas, dimension from gutter face of curb to outermost part of any nozzle cap shall be not less than 5 feet, nor more than 7 feet, except that no part of a hydrant or its nozzle caps shall be within 6 inches of any sidewalk or pedestrian ramp. Any fire hydrant placed near a street corner shall not be placed within the radius. Fire hydrants shall not be installed within nine feet vertically or horizontally of any sanitary sewer line regardless of construction. Hydrants placed on uncurbed State of Texas right of way shall be located within 18" of the R.O.W. line.

All hydrants shall stand plumb; those near curbs shall have the 4 inch nozzle facing the curb and perpendicular to it. The hydrant bury mark shall be located at ground or other finish grade; nozzles of all new hydrants shall be approximately 18 inches above grade. Each hydrant shall be connected to the main by 6 inch ductile iron pipe; a 6 inch gate valve shall be installed at the main on an anchor tee for individual shutoff of each new hydrant.

Below each hydrant, a drainage pit shall be excavated according to the details and filled with compacted coarse gravel or broken stone mixed with coarse sand under and around the bowl of the hydrant, except where thrust blocking is situated and to a level 6 inches above the hydrant drain opening. No hydrant drainage pit shall be connected to a sanitary sewer. Cover drain gravel with filter fabric to prevent blockage of voids in the gravel by migration of backfill material. The bowl of each hydrant shall be well braced against unexcavated earth at the end of the trench with concrete thrust blocking (taking care not to obstruct the hydrant drain holes). Hydrants shall be thoroughly cleaned of dirt or foreign matter before setting.

Fire hydrants on mains under construction shall be securely wrapped with a poly wrap bag or envelope taped into place. When the mains are accepted and placed in service the bag shall be removed.

663 Plugging Dead Ends: Standard plugs shall be inserted into the bells of all dead ends of pipes, tees or crosses and spigot ends shall be capped.

664 Protective Covering: Unless otherwise indicated, all flanges, nuts, bolts, threaded outlets and all other steel component shall be coal tar coated and shall be wrapped with standard low density polyethylene film or a cross laminated high-density polyethylene meeting ANSI/AWWA Specification C-105-current, with all edges and laps taped securely to provide a continuous and watertight wrap.

Repair all punctures of the polyethylene, including those caused in the placement of bedding aggregates, with duct tape to restore the continuous protective wrap before backfilling.

665 Valve Box, Casing and Cover: Stems of all buried valves shall be protected by valve box assemblies. Valve box castings shall conform to ASTM A 48, Class 30B. Testing shall be verified by the manufacturer at the time of shipment. Each casting shall have cast upon it a distinct mark identifying the manufacturer and the country of origin.

670 Boring of Pipe

671 Description

This item shall govern furnishing and installing of encasement pipe by methods of boring as indicated on the Drawings and in conformity with this specification. This item shall also include, but not be limited to other constructions activities such as traffic control measures, excavation, removal of all materials encountered in jacking or boring pipe operations, disposal of all material not required in the work, grouting, bulkhead installation, backfilling and re-vegetation.

This specification is applicable for projects or work involving either inch-pound or SI units. Within the text and accompanying tables, the inch-pound units are given preference followed by SI units shown within parentheses.

672 Submittals

672.01 General: The CONTRACTOR shall submit shop drawings in accordance with the project requirements and the following. Submittals shall include the following, as applicable:

1. Carrier pipe and casing materials, including the diameter, wall thickness, specifications, relevant data, and pipe class.
2. Installation schedules for excavation, pipe installation, backfill, grouting, and related horizontal boring operations.
3. Data on lubricants proposed for installation.
4. Locations, dimensions, and shoring plans and sections for boring and receiving shafts, including the method of excavating, shoring, bracing the shaft and thrust block design.
5. Manufacturers' data sheets and specifications describing in detail the system to be used.
6. Layout plans.

672.02 Permits: The CONTRACTOR shall obtain necessary permits from governing agencies having jurisdiction and furnish two copies to the City's designated representative before the start of the Work.

672.03 Qualifications: Horizontal boring shall be performed by a qualified Contractor. The Contractor shall have successfully completed at least 5 previous horizontal boring operations of similar length and diameter. The CONTRACTOR shall provide descriptions of similar projects, including references, where contractor responsible for horizontal boring has successfully used the proposed horizontal boring system.

672.04 Submittals for Microtunneling and Auger Boring: The CONTRACTOR shall submit the following items. Approval of the following submittals shall be obtained before ordering pipe materials or starting operations:

1. Spoil disposal method, including other materials encountered in the construction and maintenance of shafts.
2. Maximum anticipated jacking loads and supporting calculations.
3. Methods to control and dispose of groundwater.
4. Grade and alignment control systems.
5. Intermediate jacking station locations and design.
6. Lubrication and/or grouting system.
7. Plans for monitoring ground surface movement (settlement or heave) due to construction. The plan shall address the method and frequency of survey measurement. At minimum, the plan shall measure the ground movement of all structures, roadways, parking lots, and any other areas of concern within 25 feet on both sides of all microtunneling pipelines at a maximum spacing of 100feet along the pipeline route, or as required by the City of Kerrville.
8. Annular space grouting plan.
9. Contingency plans for correction of the following potential conditions:

    a. Damage to pipeline structural integrity and repair.
    b. Loss and return to line and grade.
    c. Loss of ground.

10. Procedures to meet all applicable OSHA requirements. These procedures shall be submitted for a record purposes only and will not be subject to approval by the CITY. At a minimum, CONTRACTOR shall provide the following:

    a. Protection against soil instability and groundwater inflow.
    b. Safety for shaft access and exit, including ladders, stairs, walkways, and hoists.
    c. Protection against mechanical and hydraulic equipment operations, and for lifting and hoisting equipment and material.
    d. Ventilation and lighting.

e. Monitoring for hazardous gases.
f. Protection against flooding and means for emergency evacuation.
g. Protection of shaft, including traffic barriers, accidental or unauthorized entry, and falling objects.
h. Emergency protection equipment.

672.05 Submittals for Directional Drilling: The CONTRACTOR shall submit the following items. Approval of the following submittals shall be obtained before ordering pipe materials or starting operations:

1. Manufacturers' data sheets and specifications describing in detail the directional drilling system to be used.
2. Description of similar projects with references on which the proposed system had been successfully used by contractor/operator.
3. Description of method to contain drilling fluids and to separate and dispose of spoils.
4. Maximum anticipated pulling loads and supporting calculations.
5. Pipe design data and specifications. Include design calculations to account for bending and pulling stresses expected during construction.
6. Grade and alignment control systems.
7. Contingency plans for correction of the following potential conditions:
   a. Inability to complete the pilot hole.
   b. Excessive fluid loss or hydraulic fracturing.
   c. Inability to pull the pipe

673 Materials

673.01 Pipe: Carrier pipe and encasement pipe shall be the size, type, thickness and class indicated on the Drawings, unless otherwise specified.

673.02 End Seal: End seals shall be sized to securely attach to the exterior of casing and carrier pipe to prevent water, dirt and debris from entering the annular space between the installed pipe. The end seal shall be pull-on, wrap-around or heat shrinkable. No concrete, grout or bricks will be acceptable.

673.03 Casing Spacers: Casing spacers shall be constructed of high-density polyethylene and shall be sized to securely fasten on to the carrier pipe barrel O.D. They shall be furnished with a minimum runner height to prevent the pipe from resting or sliding on its joint during and after installation.

673.04 Grout: Grout shall be used to completely fill any annular space between the bore and installed casing pipe. Grout shall consist of one part Portland cement, three parts sand and the minimum amount of water necessary to obtain the desired consistency; and, all grout mixtures shall contain 2% of bentonite by weight of the cement.

673.05 Lubricants: Water shall be used as a lubricant for jacking operations and may contain clay based and/or polymer additives to reduce the skin friction of the installed pipe.

674 Construction Methods

674.01 General: The Contractor is responsible for:

A. Adequacy of jacking and boring operations,
B. Installation of support systems as indicated on the Drawings,
C. Provision of encasement and carrier pipe, and
D. Execution of work involving the jacking operation, the wet or dry method of boring and the installation of encasement pipe simultaneously.

The Contractor shall have sole responsibility for the safety of the jacking and boring operations and for persons engaged in the work. The Contractor's attention is directed to the Construction Industry Occupational Safety and Health Administration (OSHA) Standards (29 FR 1926/1920) as published in U.S. Department of Labor publication OSHA 2207, latest revision, with particular attention to Subpart S. The Contractor shall conform to the requirements in accordance with "Trench Safety System" and shall provide an appropriate Trench Safety Plan.

When the grade of the pipe at the boring end is below the ground surface, suitable pits or trenches shall be excavated to provide sufficient room to conduct the jacking or boring operations and for placement of end joints of the pipe. In order to provide a safe and stable work area, the excavated area shall be securely sheeted and braced to prevent earth caving in accordance with the Trench Safety Plan.

The location of the work pit and associated traffic control measures required for the boring operations shall conform to the requirements of the TXDOT Manual on Uniform Traffic Control Devices.

Where installation of pipe is required under highways, streets, or other facilities by jacking or boring methods, construction shall be undertaken in such a manner that it will not interfere with operation of any railroad, street, highway, utility or other facility and shall not weaken or damage any embankment or structure. All appropriate permits shall be acquired prior to the initiation of the work. At a minimum bore pit locations on rural highway crossings, must be 30 (thirty) feet from main lanes and on other high-speed (exceeding 40 mph) highways. On low-volume (less than 750 vehicles per day) highways, the bore pit must be 16 (sixteen) feet from main lanes. On urban (curbed) highway crossings, bore pits

must be 30 (thirty) feet from high-speed roadways and 3 (three) feet from low-speed roadways.

During construction operations, and until the work pits are backfilled and fill material compacted, traffic barricades and warning lights to safeguard traffic and pedestrians shall be furnished and maintained by the Contractor. The Contractor shall submit the proposed pit location and traffic control plan for review by the Engineer or designated representative. The Review by the Engineer or designated representative, however, will not relieve the Contractor from his responsibility to obtain specified results in a safe, workmanlike manner.

When grade of pipe at boring end is below ground surface, suitable pits or trenches shall be excavated for the purpose of conducting the jacking or boring operations and for joining pipe. Work shall be securely sheeted and braced as indicated on the Trench Safety Plan to prevent earth caving and to provide a safe and stable work area.

The pipe shall be bored from the low or downstream end, if possible. Minor lateral or vertical variation in the final position of pipe from line and grade established by Engineer or designated representative will be permitted at the discretion of Engineer or designated representative provided that such variation is regular and occurs only in one direction and that the final grade of the flow line conforms to the specified direction.

When conforming to details indicated on the drawings, but the bottom of the work pit is unstable or excessively wet or the installation of water and wastewater pipe will result in less than 36 inches of cover, the Contractor shall notify the Engineer or designated representative. The Engineer or designated representative may require the Contractor to install a concrete seal, cradle, cap or encasement or other appropriate action.

Positioning of spacers should ensure that the carrier pipe is adequately supported throughout its length. Spacers at each end shall not be further than 6” from the end of the casing regardless of the size of casing and carrier pipe or type of spacer used. Casing spacers shall be doubled on each end of the encasement and shall be installed within one foot on each side of the bell or flange. The maximum spacing for casing spacers is 8 feet.

After placement of the carrier pipe is complete, the ends of the encasement pipe shall be sealed with a flexible type end seal as outlined in section 673.02. As soon as possible after the end seals are placed, the work pits or trenches, which are excavated to facilitate these operations, shall be backfilled. The backfill in the street ROW shall be compacted to not less than 95 percent of the maximum density conforming to ASTM D-1557 for depths 10 feet or greater and ASTM D-698 for depths less than 10 feet.

The boring shall proceed from a work pit provided for the boring equipment and workmen. Excavation for the work pits and the installation of shoring shall be as outlined in the Trench Safety Plan. The location of the pit shall be approved by the Engineer or designated representative. The boring shall be done mechanically using either a pilot hole or the augur method.

In the pilot hole method an approximate 2 inch pilot hole shall be bored the entire length of the crossing and shall be checked for line and grade on the opposite end of the bore from the work pit. This pilot hole shall serve as the centerline of the larger diameter hole to be bored.

When the augur method is used, a steel encasement pipe of the appropriate diameter equipped with a cutter head to mechanically perform the excavation shall be used. Augurs shall be of sufficient diameter to convey the excavated material to the work pit.

Excavated material will be removed from the working pit and disposed of properly. The use of water or other fluids in connection with the boring operation will be permitted only to the extent to lubricate cuttings. Water jetting will not be permitted.

In unstable soil formations, a gel-forming colloidal drilling fluid, that consists of at least 10 percent of high grade carefully processed bentonite, may be used to consolidate the drill cuttings, seal the walls of the hole and furnish lubrication to facilitate removal of the cuttings from the bore.

AUGER METHOD

A. Auger Boring Machine: The auger boring machine selected shall be sized with torque and thrust capacities compatible with the size of pipe or casing to be installed and expected soil and geotechnical conditions. Separate thrust jacks shall be used for advancing the cutter face and advancing the installed pipe. The maximum allowed thrust force of the installed pipe shall not be exceeded.

B. Casing and Auger: The auger casing diameter shall be sized in conjunction with the cutter face such that the annular space between the installed pipe and bored shaft does not exceed 2-inchs. The casing shall be equipped to prevent or correct rolling. The auger shall be sized to transmit the required torque and thrust to the cutting face and transport spoils back to the bore shaft for removal. Additives may be employed to condition the spoils for transport. When operating below the groundwater level , the auger system shall be capable of adjustments required to maintain face stability and prevent loss of soil or uncontrolled groundwater inflow.

C. Cutter Head: The cutter face shall be selected based on the soil conditions expected and shall be capable of supporting the full excavation face. The cutter face

shall be capable of slight steering adjustments to maintain line and grade of the installed pipe.

D. Support Bedding and Reaction Blocks: An adequately designed and constructed foundation and thrust reaction structure shall be provided. Special attention shall be given to the shaft foundation to ensure it is secure. A concrete slab shall be used in unstable conditions, and crushed stone or equivalent shall be used as a minimum. When thrust reaction blocks are used, care shall be taken to ensure they are perpendicular with the required line and grade.

E. Excavation Controls: All machine operations shall be monitored and controlled from a central point either in the shaft at the auger-boring machine or remotely from the surface. Control equipment shall integrate excavation spoil removal and installation of pipe. Operations shall be stopped when they result in pipe damage or surface disruption.

F. Monitoring Equipment: Equipment shall be provided to continuously monitor auger thrust and torque, pipe jacking thrust, and advance rate. These parameters shall be recorded and available at all times for review by the CITY. Line and grade shall be continuously monitored by referencing the casing to a design reference. If continuous referencing is not possible due to equipment design limitations, line and grade shall be verified by other suitable means at every 50-feet of advancement.

G. Intermediate Shafts: If an intermediate shaft is requested, the CONTRACTOR shall obtain a written approval from the CITY. The intermediate shaft shall not be located in areas prohibited and as directed by the CITY. The CONTRACTOR's request shall include all necessary permits and approvals, minimize public inconvenience and minimize impacting existing facilities.

H. Annular Space Grouting. The annular space created by the over cut of the auger face in excess of 2-inchs shall be filled with an approved material, unless otherwise specified. When grouting is specified, pressure-injected grout shall fill voids outside the limits of the excavation created by caving or collapse of earth cover over the excavation. The CONTRACTOR shall furnish and operate suitable equipment for any required grouting operations depending on the condition of the application. The grouting operation shall not damage adjacent utilities or other properties. Grout shall be injected at a pressure that will not distort or imperil any portion of the work or existing installations or structures.

I. Piping: The pipe manufacturer's design jacking loads shall not be exceeded during the installation process. The pipe shall be designed to take full account of all temporary installation loads.

J. Repair or Replacement of Damaged Pipe: Damaged pipe shall be jacked through to the reception shaft and removed. Other methods of repairing the damaged conduit may be used as recommended by the manufacturer and approved by the CITY.

MICROTUNNELING

A. Equipment: The MTBM shall be capable of installing the pipe while being compatible with the anticipated soil and geotechnical conditions. The MTBM cutter face shall at all times be capable of supporting the full excavated area without the use of ground stabilization and have the capability of measuring the earth pressure at the face a setting a calculated earth balancing pressure. The maximum radial annular space shall not exceed 1-inch, unless otherwise specified. The MTBM shall be capable of controlling shield rotation by means of a bi-directional drive on the cutter head or by use of mechanical fins or grippers. The MTBM shall be mechanically articulated to enable remotely controlled steering of the shield. The MTBM shall control groundwater during excavation without the use of external dewatering equipment. The measuring and balancing of earth and groundwater pressure shall be achieved by use of a slurry or cased auger system. The system shall be capable of incremental adjustments to maintain face stability for the soil conditions encountered.

B. Jacking Equipment: The main jacks shall be mounted in a jacking frame and located in the jacking shaft. The MTBM shall be moved forward by the jacks advancing a successive string of connected pipes toward a receiving shaft. Intermediate jacking stations may be used for long drives where frictional forces would exceed the maximum allowable jacking force. The intermediate jacking station shall employ a steel jacket or other suitable means to prevent soil intrusion into the conduit. Jacking forces at the intermediate jacking station shall be continuously monitored during jacking operations.

C. Intermediate Shafts: If an intermediate shaft is requested, the CONTRACTOR shall obtain a written approval from the CITY. The intermediate shaft shall not be located in areas prohibited or as directed by the CITY. The CONTRACTOR's request shall include all necessary permits and approvals, minimize public inconvenience and minimize impacting existing facilities.

D. Annular Space Grouting: The annular space created by the overcut of the MTBM in excess of 2-inchs shall be filled with an approved material, unless otherwise specified. When grouting is specified, pressure-injected grout shall fill voids outside the limits of the excavation created by caving or collapse of earth cover over the excavation. The CONTRACTOR shall furnish and operate suitable equipment for any required grouting operations depending on the condition of the application. The grouting operation shall not damage adjacent utilities or other properties. Grout shall be injected at a pressure that will not distort or imperil any portion of the work or existing installations or structures.

E. Piping: The pipe manufacturer's design jacking loads shall not be exceeded during the installation process. The pipe shall be designed to take full account of all temporary installation loads. Damaged pipe shall be jacked through to the reception

shaft and be removed. Other methods of repairing the damaged conduit may be used, as recommended by the manufacturer and approved by the CITY.

DIRECTIONAL DRILLING

A. Drilling/Pulling Equipment: The equipment used to drill the pilot hole, back ream and pull the product pipe in place shall be adequately sized and compatible to the expected ground conditions. It shall be equipped with instrumentation to accurately locate the alignment and grade of the pilot hole to monitor drilling fluid flow and pressure and measure pulling force applied to the product pipe. Steering information of the drill string, pressures, and pulling forces shall be continuously monitored during operations. The equipment shall be capable of using mechanical and/or hydraulic means to change the boring course. Equipment shall also be used to recover and separate drilling fluids and soil cuttings and subsequent reuse of drilling fluids. Direct disposal of contained drilling fluids may be permitted with prior approval of the CITY.

B. Pilot Hole: The CONTRACTOR shall drill the pilot hole along the path shown in the Contract Drawings to within the tolerance limits specified. The exit point of the drill string shall also meet specified tolerance limits. At the completion of the pilot hole, the CONTRACTOR shall provide an as-built survey consisting of a three-dimensional coordinate tabulation accurately referencing the pilot hole to the drilled entry point. Drilling must be accomplished with fluid assisted mechanical cutting. Uncontrolled jetting (where fluid force is the primary means for creation of the final bore hole diameter) is prohibited. The minimum pressure and flow of drilling fluids practicable shall be used during drilling operations.

C. Ream and Pull Back: The number of reaming passes to expand the pilot hole for product pipe installation is left to the discretion of the CONTRACTOR. The maximum allowable tensile load of the product pipe shall not be exceeded during pullback operations or when pre-reaming and pullback are performed simultaneously. A swivel connection shall be used between the reaming device and the product pipe to minimize stress on the pulled pipe. The pulled pipe shall be supported in such a fashion that it moves freely during pullback with no damage done to any corrosion coatings or linings. When staging area is limited, shorter lengths of pipe may be stockpiled then connected and pulled in segments. The pipe shall be pulled back such that at least one joint at the lead end completely clears the bore so that piping and joint can be inspected.

D. Loss of Fluid: At installations below bodies of water, the CONTRACTOR shall be diligent to detect drilling fluid losses below the water surface. Operations shall be stopped when they result in any pipe damage or surface disruption. The CONTRACTOR shall propose immediate action for review and approval by the CITY to resolve the problem. Remedial action shall be at no additional expense to the CITY.

E. Clean-Up: The CONTRACTOR shall be responsible for the removal and disposal of excavated material and excess drilling fluid in accordance with all local, state and federal regulations.

F. Welding: Welding of steel pipe used for pullback shall be in accordance with ANSI/AWS D1.1. All welds shall be radiographically inspected.

COMPACTION/PIPE RAMMING

A. Driving Pipe: Pipes shall be driven with an open face. The leading edge shall be equipped with a cutting band for reinforcement and to open a slightly larger path through the soil to reduce the skin friction of the following pipe. The overcut shall not exceed 1-inch from the outer surface of the pipe. The pipe shall be driven in one segment when working space is available. The pipe shall be supported and positioned by adjustable bearing stands to achieve proper line and grade alignment.

B. Driving Operations: Driving force to install the carrier pipe may be delivered through a conventional hydraulic jacking system or pneumatically powered percussion tools. In either case, the driving force shall be evenly transmitted using pressure plates or other types of adapters. Jacking forces shall be continuously monitored and recorded during installation. The maximum allowable jacking forces shall not be exceeded. Pneumatic tools shall be adequately sized to prevent damage to the pipe from excessive impact forces.

C. Lubrication: Water or bentonite slurry may be applied to the pipe for lubrication at the CONTRACTOR's option. Lubricant slurries shall be contained on site and excesses shall be properly disposed of by the CONTRACTOR.

D. Spoil: Spoil shall be removed from the installed pipe by reaming, augering, or water flushing. If flushing is employed, the slurry shall be contained and properly disposed of by the CONTRACTOR. The pipe shall be cleaned after soil removal by flushing or using pressure driven cleanout plugs.

E. Settlement Monitoring: When the pipeline is in sandy or cohesionless soils, the CONTRACTOR shall monitor the soil surface above the pipe alignment for settlement during the installation. Settlement shall not exceed 1-inch or as specified.
F. Intermediate Shafts: If intermediate shafts are requested, the CONTRACTOR shall obtain a written approval from the CITY. Intermediate shafts shall not be located in areas prohibited or as directed by the CITY. The CONTRACTOR's request shall include all necessary permits and approvals, shall minimize public inconvenience, and shall minimize impacts on existing facilities.

F. Grouting: If the annular space between the casing pipe and outside soil or rock is in excess of 3/4-inch is created by the cutting band, it shall be grouted in accordance with the provisions in this Section for grouting of microtunnels.

675 Cleanup and Restoration

It shall be the Contractor's responsibility to keep the construction site neat, clean and orderly at all times. Cleanup shall be vigorous and continuous to minimize traffic hazards or obstructions along the streets and to driveways. Trenching, backfill, pavement repair (as necessary), and cleanup shall be coordinated as directed by the City. The Engineer will regulate the amount of open ditch and may halt additional trenching if cleanup is not adequate to allow for orderly traffic flow and access.

Materials at the site shall be stored in a neat and orderly manner so as not to obstruct pedestrian or vehicular traffic. All damaged material shall be removed from the construction site immediately and disposed of in a proper manner. All surplus excavated materials become the property of the Contractor for disposal at his expense. After trenching, the Contractor shall immediately remove all excavated materials unsuitable for or in excess of, backfill requirements. Immediately following the pipe laying Work as it progresses, the Contractor shall backfill, grade and compact all excavations as provided elsewhere and shall immediately clean up and remove all unused soil, waste and debris and restore all surfaces and improvements to a condition equal or superior to that before construction began and to an appearance which complements the surroundings. The Contractor shall grade and dress the top 6 inches of earth surfaces with soil or other material similar and equal to the surrounding, fill and smooth any visible tracks or ruts, replace and re-establish all damaged or disturbed turf or other vegetation and otherwise make every effort to encourage the return of the entire surface and all improvements to a pleasant appearance and useful condition appropriate and complementary to the surroundings and equal or similar to that before construction began.

Permanent pavement replacement, if necessary, shall begin immediately after all testing of each segment of piping is satisfactorily completed.

676 Measurement & Payment

676.01 Measurement: Pipe will be measured by the linear foot for the various types, sizes and classes. Parallel lines will be measured individually.

Where a line ties into an existing system, the length of the new line will be measured from the visible end of the existing system at the completed joint. Unless otherwise indicated, the length of water and wastewater lines will be measured along pipe horizontal centerline stationing through fittings, valves, manholes, and other appurtenances.

Unless otherwise provided, no measurement for ductile fittings will be made, but shall be considered subsidiary to the various bid items in the contract.

Stormwater pipe will be measured along the slope of the pipe. Where drainage pipe ties into inlets, headwalls, catch basins, manholes, junction boxes or other structures that length of pipe tying into the structure wall will be included for measurement but no other portion of the structure length or width will be so included.

Excavation and backfill, when included as pipe installation will not be measured as such but shall be included in the unit price bid for constructing pipe and measured as pipe complete in place including excavation and backfill.

When pay items are provided for the other components of the system, measurement will be made as addressed hereunder.

676.02 Payment: Payment for pipe, measured as prescribed above, will be made at the unit price bid per linear foot for the various sizes of pipe, of the materials and type indicated, unless unstable material is encountered or trench excavation and backfill is bid as a separate item.

The casing spacers and end seals will not be paid for directly but will be considered subsidiary to the pay item for the casing.

Separation Distances
Section 700

710 General Requirements

Separation distances criteria are the minimum requirements to be used within the jurisdiction of the City of Kerrville. The jurisdiction of the City of Kerrville is defined as the area bound by the ETJ of the City of Kerrville.

720 Separation Distances - Wastewater and Water Lines

Separation Distances Between Wastewater Lines and Water Lines; and Manholes and Water Lines. Where new wastewater lines or manholes are installed in compliance with the requirements of this subchapter, they shall be installed no closer than nine feet, in any direction, from any water lines, measured from the outside of the wastewater line or manhole to the outside of the water line. Wastewater lines shall be installed in separate trenches from water lines. Where nine feet of separation cannot be achieved, the project shall comply with the requirements in paragraphs (720.01) – (720.04) of this subsection.

720.01 New Wastewater Lines - Parallel Lines. Where new wastewater lines are installed parallel to an existing water line, the horizontal separation distance shall be no less than four feet and the vertical separation shall be no less than 2 feet (outside to outside), with the water line above the wastewater line. The wastewater line shall be constructed of pipe material and joints having a minimum pressure rating of 150 psi.

720.02 New Wastewater Lines - Wastewater Lines Crossing Water Lines. Where new wastewater lines are installed crossing an existing waterline, the vertical separation shall be no less than two feet or more below a water line, at a crossing angle between 75 degrees and 90 degrees, with pipe segment lengths of 18 feet or greater. With these types of installations, one segment of the wastewater pipe shall be centered under the potable water line such that the joints of the wastewater pipe are equidistant from the center line of the potable water line. Whenever possible, the crossing shall be centered between the joints of the potable water line. All wastewater pipe within a distance of 9 feet from the water line, in every direction as measured perpendicularly from any point on the water pipe to the wastewater pipe, shall have either a pressure rating for both joints and pipe of 150 psi or have a pipe stiffness of at least 115 psi with compatible joints.

720.03 New Wastewater Lines - Other Crossings. Any wastewater line crossing which is not installed two feet or more below the water line, installed at a crossing angle of less than 75 degrees, or which uses pipe segment lengths less than 18 feet in length, shall be installed with the same

requirements as those detailed in section 720.02 of this item, with the addition that the minimum distance between the outside of any wastewater line and the outside of any water line shall be 6 inches and that all portions of wastewater pipe, which are not rated at a minimum pressure of 150 psi for both joints and pipe, which are within 9 feet of the water line, as measured perpendicularly from any point on the water pipe to the wastewater pipe, shall be embedded in cement stabilized sand. Where cement stabilized sand is used, the sand shall have a minimum of 10 percent cement per cubic yard of cement stabilized sand mixture, based on loose dry weight volume (at least 2.5 bags of cement per cubic yard of mixture. The cement stabilized sand bedding shall be a minimum of 6 inches above and one quarter of the pipe diameter on either side and below the sewer pipe.

720.04 Manholes and Water Lines. If a manhole is to be placed at a distance of less than 9 feet from a water line, the water line shall be encased in a new encasement, a minimum of 18 feet long, with a pressure rating of at least 150 psi with a nominal diameter of at least two sizes larger than the existing or proposed water line. The space around the carrier pipe shall be supported at 5 foot intervals with spacers or be filled to the spring line with washed sand. The encasement pipe shall be centered on the crossing and both ends sealed with cement grout or manufactured seal.

730 Separation Distances – Type I Reclaimed Water

730.01 Potable Water Line

Reclaimed water piping shall be separated from potable water piping by a horizontal distance of at least nine feet. Where the nine foot separation distance cannot be achieved, the reclaimed water piping must meet the line separation requirements of Section 720 of this section. The requirements of Section 720 of these specifications shall be followed, with “reclaimed water line” substituted for “wastewater line”.

730.02 Wastewater Line

Where a reclaimed water line parallels a wastewater line, the reclaimed water line shall be constructed in accordance with these specifications. The horizontal separation distance shall be three feet (outside to outside) with the reclaimed water line at the level of or above the sewer line. Reclaimed water lines which parallel sewer lines may be placed in the same benched trench provided the three feet separation is provided.

Where a reclaimed water line crosses a sewer line, the requirements of Section 720 of these specifications shall be followed, with “reclaimed water line” substituted for “water line”.

730.03 Acceptance Testing

Acceptance testing shall conform to Section 800 of Standard Specifications.

730.04 TCEQ Special Design Criteria for Reclaimed Water Systems.

All construction plans shall be reviewed for compliance with TCEQ Chapter 210 requirements.

Acceptance Testing
Section 800

810 General Requirements

810.01 Acceptance testing criteria are the minimum requirements to be used within the jurisdiction of the City of Kerrville. The jurisdiction of the City of Kerrville is defined as the area bound by the ETJ of the City of Kerrville. This includes any private system which will connect or which may connect to City utilities.

810.02 Calibration of all gauges pressure or vacuum gauges shall have a sticker affixed upon the gauge certifying it has been calibrated within the preceding six months before the equipment is allowed to be used for acceptance testing.

810.03 The Contractor will not be permitted to load the new piping by opening a valve connected to an existing system. The Contractor may use an existing service or install a new service in the existing main. The connection shall be installed with a mechanical backflow prevention device and shall be metered.

820 Water Main Testing

821 Acceptance Testing of Water Main

821.01 Laboratory Testing of Backfill – Backfill must meet the requirements as set forth in Section 600 and as shown in the standard details. During construction the backfill for water mains must be compacted to 95-100% Standard Proctor (ASTM D-698) and field density tests must be taken and compared to the corresponding proctor horizontally every 100 linear feet at a vertical depth of 2-ft. Backfill with too much moisture that, upon a visual inspection, shows pumping will be rejected and require drying and reworking. Backfill that fails a density test must be recompacted for a length and depth specified by the inspector and retested. All tests must be done in the presence and under the direction of a city inspector. Copies of all tests must be forwarded to the City Engineer or his designated representative within two weeks of the test date. The City Engineer or a city inspector may require testing at intervals greater than described if needed.

821.02 Hydrostatic Testing: After the pipe has been installed and backfilled and all service laterals, fire hydrants and other appurtenances installed and connected, a pressure test, followed by a leakage test, shall be conducted by the Contractor and witnessed by a City of Kerrville Inspector. The use of a reduced pressure zone (RPZ) backflow prevention device shall be used when

loading the water main (see Water details, Section 380). The Contractor will furnish all the equipment required for the tests. Before applying the specified test pressure, all air shall be expelled from the pipe. If permanent air vents are not located at all high points, the Contractor shall install corporation cocks at such points.

All water services and fire hydrant leads, with the main 6-inch gate valve open, the hydrant valve seats closed and nozzle caps open, shall be included in the test.

A. Pressure Test: New mains shall be hydrostatically field tested before acceptance by being placed under 1.5 times system pressure, (or 175 psi) for a period of not less than 24 hours. It is the intent of these specifications that all joints be watertight and that all joints which are found to leak either by observation or during any test shall be made watertight by the Contractor. Repairs shall be made by the Contractor to correct any leaking or defective materials.

B. Pressure Pipe Leakage Test: A leakage test will follow the pressure test and be conducted on lengths not to exceed 1000 feet or each valved section. The leakage test shall be at 150 psi for at least 2 hours and not to exceed 6 hours.

C. Allowable Leakage: Leakage shall be defined as the quantity of water that must be supplied into the newly laid pipe or any valved section thereof to maintain pressure within 5 psi of the specified test pressure after the pipe has been filled with water and the air has been expelled. Leakage shall not be measured by a drop in pressure in a test section over a period of time. Allowable leakage shall be defined as any leakage under the following formula:

$$L = SD(P)^{1/2} / 133{,}200$$

Where:

L = allowable leakage, in gallons per hour
S = length of pipe tested, in feet
D = nominal diameter of the pipe, in inches
P = average test pressure during the leakage test, in psig

If repairs are required, the hydrostatic field test shall be repeated until the pipe installation conforms to the specified requirements and is acceptable by the City Engineer.

D. Location and Correction of Leakage: If such testing discloses leakage in excess of this specified allowable, the Contractor, at his

expense, shall locate and correct all defects in the pipe line until the leakage is within the indicated allowance.

All visible leakage in pipe shall also be corrected by Contractor at his own expense.

E. Operation of valves: No valve in the City's water distribution system shall be operated by the Contractor without prior authorization by the City. The Contractor shall notify the City when a valve is to be operated and shall operate the valve only in the presence of the City's representative.

821.03 Disinfection of Potable Water Lines: The Contractor shall protect all piping materials from contamination during storage, handling and installation. Prior to disinfection, the pipeline interior shall be clean, dry and unobstructed. All openings in the pipeline shall be closed with watertight plugs when pipe laying is stopped at the close of the day's work.

Water for the Work shall be metered and furnished by the Contractor. However, fees for water usage will be waived on Capital Improvement Projects.

The Contractor, at his expense, will supply the test gauges and the Sodium Hypochlorite conforming to ANSI/AWWA B300, which contains approximately 5 percent to fifteen percent available chlorine. Calcium Hypochlorite conforming to ANSI/AWWA B300, which contains approximately 65 percent available chlorine by weight, may be used in granular form or in 5 g tablets for 16" diameter or smaller lines.

During construction, granules or tablets shall placed in the pipe for disinfection. Water mains and appurtenances must be completely installed, flushed, disinfected, and satisfactory bacteriological sample results received prior to permanent connections being made to the active distribution system.

A. Procedure and Dosage: Connection to the existing system will be allowed with a valve arranged to prevent the strong disinfecting dosage from flowing back into the existing water supply piping. The valve shall be kept closed. No other connection shall be made until the disinfection of the new line is complete and the water samples have met the established criteria. The valve shall remain closed at all times. The new pipeline shall not be filled by opening the valve to the existing system. The new pipeline shall be filled completely by using an existing service or by installing a new service. Regardless of the method used, a backflow prevention device shall be installed. Every part of the line shall contain a minimum concentration of 50 ppm available chlorine.

The disinfecting solution shall be retained in the piping for at least 24 hours and all valves, hydrants, services, stubs, etc. shall be operated so as to disinfect all their parts. After this retention period, the water shall contain no less than 25 parts per million chlorine throughout the treated section of the pipeline.

The heavily chlorinated water shall then be carefully flushed from the potable water line until the chlorine concentration is no higher than the residual generally prevailing in the existing distribution system or approximately one part per million. Proper planning and appropriate preparations in handling, diluting, if necessary, and disposing of this strong chlorine solution is necessary to insure that there is no injury or damage to the public, the water system or the environment. Additionally an authorized representative of the City must witness the flushing.
Approval for discharge of the diluted chlorine water or heavily chlorinated water into the wastewater system must be obtained from the Water and Wastewater Utility Department. The line flushing operations shall be regulated by the Contractor so as not to overload the wastewater system or cause damage to the odor feed systems at the lift stations.

B. Bacteriological Testing: After final flushing of the strong disinfecting solution, water samples from the line will be tested for bacteriological quality by the City and must be found free of coliform organisms before the pipeline may be placed in service. One test sample will be drawn from the end of the main and additional samples will be collected at intervals of not more than 1000 feet along the pipeline. All stubs shall be tested before connections are made to existing systems.

The Contractor, at its expense, shall install sufficient sampling taps at proper locations along the pipeline. Each sampling tap shall consist of a standard corporation cock installed in the line and extended with a copper tubing gooseneck assembly. After samples have been collected, the gooseneck assembly may be removed and retained for future use.

Samples for bacteriological analysis will only be collected from suitable sampling taps in sterile bottles treated with sodium thiosulfate. Samples shall not be drawn from hoses, fire hydrants or unregulated sources. The City, at its expense, will furnish the sterile sample bottles and collect the test samples. Testing fees will be paid by the Contractor at the time of sampling.

If the initial disinfection fails to produce acceptable sample test results, the disinfection procedure shall be repeated. Before the

piping may be placed in service, satisfactory test results must be obtained.

An acceptable test sample is one in which: (1) the chlorine level is similar to the level of the existing distribution system; (2) there is no free chlorine and (3) the total coliform count is zero. An invalid sample is one, which has excessive free chlorine, silt or non-coliform growth. If invalid sample results are obtained for any pipe, the Contractor may, with the concurrence of the Inspector, flush the lines and then collect a second series of test samples for testing by the City. After this flushing sequence is completed, any pipe with one or more failed samples must be disinfected again in accordance with the approved disinfection procedure followed by appropriate sampling and testing of the water.

The City of Kerrville Laboratory will notify the assigned City of Kerrville Inspector in writing of all test results. The Inspector will subsequently notify the Contractor of all test results. The Laboratory will not release test results directly to the Contractor.

830 Wastewater Testing

831 Acceptance Testing of Wastewater Manholes

Manholes shall be tested separately and independently of the wastewater lines.

831.01 Vacuum Method: A pre-vacuum test shall be performed by the Contractor after assembly and prior to backfilling. A vacuum test will be performed after backfill and base installation.

All lift holes and exterior joints shall be plugged with a non-shrink grout prior to backfilling. No grout shall be placed in horizontal joints prior to testing.

Testing after backfill and compaction are complete will be the basis for acceptance of the manhole.

A. Equipment:

1. Plug Design: Pneumatic plugs shall be used. All plugs shall be designed to resist internal testing pressures without the aid of external bracing or blocking.

2. Singular Control Panel: To facilitate test verification by the Inspector, all air used shall pass through a single, above ground control panel.

3. Equipment Controls: The above ground air control equipment shall include a shut-off valve, pressure regulating valve, pressure relief valve, input pressure gauge and a continuous monitoring pressure gauge having a pressure range from 0 to at least 10 psi. The continuous monitoring gauge shall be no less than 4 inches in diameter with minimum divisions of 0.10 psi and an accuracy of +/-0.04 psi.

4. Separate Hoses: Two separate hoses shall be used to: (1) connect the control panel to the sealed line for introducing low-pressure air, and (2) a separate hose connection for constant monitoring of air pressure build up in the line. This requirement greatly diminishes any chance for over pressuring the line. A separate hose shall also be required to inflate the pneumatic plugs from the above ground control panel.

B. Procedures:

1. Manhole section interiors shall be carefully inspected; units found to have through-wall lift holes, or any penetration of the interior surface by inserts provided to facilitate handling, will not be accepted. Coating shall be applied after the testing unless coating is applied is applied at the factory. All lift holes and exterior joints shall be plugged with an acceptable non-shrink grout. No grout shall be placed in horizontal joints prior to testing.

2. After cleaning the interior surfaces of the manhole, the Contractor shall place and inflate pneumatic plugs in all of the connecting pipes to isolate the manhole; sealing pressure within the plugs shall be as recommended by the plug manufacturer. Plugs-and the ends of pipes connected by flexible boots shall be blocked to prevent their movement during the vacuum test.

3. The vacuum test head shall be placed on the top of the cone section or, inside of the top of the manhole cone section, and the compression seal band inflated to the pressure recommended by its manufacturer. The vacuum pump shall be connected to the outlet port with the valve open. When a vacuum of 10 inches of mercury has been attained, the valve shall be closed and the time noted. Tampering with the test equipment will not be allowed. Vacuum gauges shall not show evidence of sticking, and gauge that shows evidence of

sticking shall be replaced with a calibrated gauge prior to any additional testing.

4. The manhole shall have passed the test if the vacuum does not drop below 9 inches of mercury within 2 minutes. The actual vacuum shall be recorded at the end of the test time minutes during which the valve was closed.

5. When the standard vacuum test cannot be performed because of design or material, testing shall be performed as directed by the City Engineer.

831.02 Smoke Testing: All rings and covers shall be smoke tested by City personnel upon completion of project and prior to final acceptance. Any defects shall be repaired.

831.03 Failure to Pass the Test -- Records of Tests: If the manhole fails to pass the initial test method as described in (1) Test by the Vacuum Method, the Contractor shall locate the leak, if necessary by disassembly of the manhole, checking gaskets and replacing if necessary, re-lubrication and re-assembly, or Contractor may install an acceptable exterior joint sealing product on all joints and then retested. If any manhole fails the vacuum twice, the Contractor shall consider replacing that manhole. If the Contractor chooses to attempt to repair that manhole, the manhole must be retested until it passes. In no case shall cold applied preformed plastic gaskets be used for repair. Records of all manhole repairs/testing shall be made available to the City Engineer prior to acceptance. Any damaged or visually defective products, or any products out of acceptable tolerance shall be removed from the site.

At a minimum, test records on all manholes that fail, shall include the following and shall be part of the project records turned in with the acceptance package.

Name of the manhole manufacturer
Date tested/date re-tested
Passed/failed and state what was done to correct the problem
Test Method Used
Location/station of manhole
Precast/cast-in- place bottom
Type of Coating
Any repairs made to the joints.

831.04 Inspection: The City Engineer Representative shall make a visual inspection of each manhole after it has passed the testing requirements and is considered to be in its final condition. The inspection shall determine the

completeness of the manhole; any defects shall be corrected to the City Engineer satisfaction.

The City Engineer Representative may, at any time, require a calibration check of the instrumentation used. The Vacuum gauge shall have a calibration sticker within the last six (6) months.

832 Quality Testing for Installed Pipe

832.01 Laboratory Testing of Backfill – Backfill must meet the requirements as set forth in Section 600 and as shown in the standard details. During construction the backfill for sewer mains must be compacted to 95-100% Standard Proctor (ASTM D-698) for 4-10 feet of cover or 95-100% of Modified Proctor (ASTM D-1557) for more than 10 feet of cover and density tests must be taken and compared to the corresponding proctor horizontally every 100 linear feet and vertically at the following depths (depending on depth of sewer main): 2 ft, 5 ft, 7.5 ft, 10 ft, 12.5 ft. Backfill that fails a density test must be recompacted for a length and depth specified by the inspector and retested. In addition, where Moisture Sensitive Material is used as backfill (See Section 600 and standard details) the material must be within 3% (+ or -) of the optimum moisture content for the respective proctor, otherwise it will be wetted (or dried) and reworked as necessary. Backfill with too much moisture that, upon a visual inspection, shows pumping will be rejected and require drying and reworking. All tests must be done in the presence and under the direction of a city inspector. Copies of all tests must be forwarded to the City Engineer or his designated representative within two weeks of the test date. The City Engineer or a city inspector may require testing at intervals greater than described if needed.

832.02 Low Pressure Air Test of Plastic Gravity Flow Wastewater Lines:

A. General: Wastewater lines shall be air tested between manholes. Backfilling to grade shall be completed before the test and all laterals and stubs shall be capped or plugged by the Contractor so as not to allow air losses, which could cause an erroneous, test result. Manholes shall be plugged so they are isolated from the pipe and cannot be included in the test.

All plugs used to close the sewer for the air test shall be capable of resisting the internal pressures and must be securely braced. Place all air testing equipment above ground and allow no one to enter a manhole or trench where a plugged sewer is under pressure. Release all pressure before the plugs are removed. The testing equipment used must include a pressure relief device designed to relieve pressure in the sewer under test at 10 psi or less and must allow continuous monitoring of the test pressures in order to avoid

excessive pressure. Use care to avoid the flooding of the air inlet by infiltrated ground water. (Inject the air at the upper plug if possible.) Use only qualified personnel to conduct the test.

B. Ground Water: During construction any ground water shall be noted on the approved construction drawings. If ground water is noted during construction, test holes shall be dug to the pipe zone at intervals of not more than 100 feet and the average height of ground water above the pipe (if any) shall be determined before starting the test.

C. Test Procedure: The City Engineer may, at any time, require a calibration check of the instrumentation used. Use a pressure gauge having minimum divisions of 0.10 psi. All air used shall pass through a single control panel. Clean the sewer to be tested and remove all debris where indicated. Wet the sewer prior to testing. The average back pressure of any groundwater shall be determined (0.433 psi) for each foot of average water depth (if any) above the sewer.

Add air slowly to the section of sewer being tested until the internal air pressure is raised to 4.0 psig greater than the average back pressure of any ground water that may submerge the pipe. After the internal test pressure is reached, allow at least 2 minutes for the air temperature to stabilize, adding only the amount of air required to maintain pressure. After the temperature stabilization period, disconnect the air supply. Determine and record the time in seconds that is required for the internal air pressure to drop from 3.5 psig to 2.5 psig greater than the average back pressure of any ground water that may submerge the pipe. Compare the time recorded with the specification time for the size and length of pipe as given in the following table:

Table For Low Pressure Air Testing of Plastic Pipe:

Pipe Diameter (Inches)	Minimum Time (Seconds)	Length of Pipe for Minimum Time (Feet)	Time for Longer Length of Pipe (Seconds)
6	340	398	0.855(L)
8	454	298	1.520(L)
10	567	239	2.374(L)
12	680	199	3.419(L)
15	850	159	5.342(L)
18	1020	133	7.693(L)
21	1190	114	10.471(L)
24	1360	100	13.676(L)

The test may be stopped if no pressure loss has occurred during the first 25% of the calculated testing time. If any pressure loss or leakage has occurred during the first 25% of the test period, then the test shall continue for the entire test duration as outlined above or until failure.

Any drop in pressure, from 3.5 psig to 2.5 psig (adjusted for groundwater level), in a time less than that required by the above table shall be cause for rejection.

Low-pressure air tests must conform to the procedure described in ASTM C-924 or other equivalent procedures.

832.03 Pressured Sewer/Forced Mains Test: The use of a reduced pressure zone (RPZ) backflow prevention device shall be used when loading the force main from the city's potable water mains (see Sewer Details, Section 480). Leakage in the pressure sewer hydrostatic test shall be defined as the quantity of water that must be supplied into the pipe or any valved section thereof, to maintain pressure within 5 pounds per square inch of the specified test pressure after the air in the pipeline has been expelled. The test pressure shall be 50 psi above the normal operating pressure. The minimum test time is 4 hours. The maximum allowable leakage shall not exceed 10 gallons per inch diameter per mile of pipe per day. If the quantity of leakage exceeds the maximum amount calculated, remedial action shall be taken to reduce the leakage to an amount within the allowable limit.

832.04 Effluent/Reuse Line Pressure Testing: Shall be performed in accordance with Section 821.01 Hydrostatic Testing of Water Mains. In no

case shall the allowable leakage be greater than that specified in the TNRCC Chapter 317.2.

832.05 Deflection Test: Deflection tests shall be performed on all flexible pipes. For pipelines with inside diameters less than 27 inches, a rigid mandrel shall be used to measure deflection. The test shall be conducted after the final backfill has been in place at least 30 days. No pipe shall exceed a deflection of five percent. If a pipe should fail to pass the deflection test, the problem shall be corrected and a second test shall be conducted after the final backfill has been in place an additional 30 days. The tests shall be performed without mechanical pulling devices.

The design engineer should recognize that this is a maximum deflection criterion for all pipes and a deflection test less than five percent may be more appropriate for specific types and sizes of pipe. Upon completion of construction, the design engineer or other Texas Registered Professional Engineer appointed by the owner shall certify, to the City Engineer, that the entire installation has passed the deflection test. This certification may be made in conjunction with the notice of completion.

Test(s) must be performed without mechanical pulling devices and must be witnessed by the City Engineer or his designated representative.

Any deficiencies noted shall be corrected by the Contractor and the test(s) shall be redone.

The rigid mandrel shall have an outside diameter (O.D.) equal to 95% of the inside diameter (I.D) of the pipe. The inside diameter of the pipe, for the purpose of determining the outside diameter of the mandrel, shall be the average outside diameter minus two minimum wall thicknesses for O.D. controlled pipe and the average inside diameter for I.D. controlled pipe, all dimensions shall be per appropriate standard. Statistical or other "tolerance packages" shall not be considered in mandrel sizing.

The rigid mandrel shall be constructed of a metal material that can withstand 200 psi without being deformed. The mandrel shall have nine or more "runners" or "legs" as long as the total number of legs is an odd number. The barrel section of the mandrel shall have a length of at least 100% of the inside diameter of the pipe.

A proving ring shall be provided and used for each size mandrel in use. Contractor shall submit his proposed pipe mandrels and proving rings to the City Engineer or his designated representative for concurrence prior to testing the line.

Method Options:
a) Adjustable or flexible mandrels are prohibited.

b) A television inspection is not a substitute for the deflection test.
c) A deflectometer may be approved for use on a case by case basis.
d) Mandrels with removable legs or runners will be accepted.

833 WASTEWATER MAIN TELEVISION INSPECTION

833.1 DESCRIPTION: The Contractor shall furnish all labor, materials, equipment, and incidentals to provide the televising and videotaping of sewer lines and manholes utilizing a color, closed-circuit television inspection unit to determine their condition.

833.2 GENERAL: After construction of the sanitary sewer main, the newly constructed sanitary sewer shall be televised immediately upon cleaning and flushing. Any abnormalities such as, but not limited to, misaligned joints, cracked/defective pipe, rolled gaskets, shall be repaired. Sections requiring repair shall be re-televised to verify condition of repair.

833.3 EXECUTION: The Contractor shall provide a VHS videotape and logs of the televised inspection for review. The television unit shall also have the capability of displaying in color, on VHS videotape, pipe inspection observations such as pipe defects, sags, points of root intrusion, offset joints, service connection locations, and any other relevant physical attributes. Each tape shall be permanently labeled with the following:

Project name;
Date of television inspection; Name of City Inspector observing;
Station to station location and size of sanitary sewer;
Street/easement location;
Name of Contractor; Date tape submitted; and
Tape number.

The Contractor shall provide a line diagram area sketch and written log for each completed segment of videotaped sewer main describing the section being televised, flow and camera direction, position of service connections, description and location of failures, pipe condition, weather conditions, and other significant observations. The television inspection equipment shall have an accurate footage counter which displays on the monitor the exact distance of the camera from the center of the starting manhole. A camera with rotating and panning lens capabilities is required. The camera height shall be centered in the conduit being televised. The speed of the camera through the conduit shall not exceed 40 feet per minute. The Contractor shall be required to have all materials, equipment, and labor force necessary to complete all videotaping on the job site prior to isolating the sewer manhole segment and beginning videotaping operations.

The Contractor shall not be allowed to float the camera. There may be occasions during the televised inspection of a manhole section when the camera will be unable to pass an obstruction. At that time, and prior to proceeding, the Contractor shall contact the Project

Inspector. If the length of sewer line cannot be televised because of obstructions, the Contractor shall clean the system as is necessary. If, in the opinion of the Inspector, the obstruction is attributed to a collapsed main or pipe deflection, televising shall be suspended.

840 STORM DRAINAGE PIPE TELEVISION INSPECTION

840.01 Laboratory Testing of Backfill – Before construction may begin sample proctors of the soil must be taken by a certified geotechnical lab at each location of the storm drainage pipe where the soil classification changes. During construction the backfill for storm drainage pipe must be compacted to 95-100% Standard Proctor (ASTM D-698) for 4-10 feet of cover or 95-100% of Modified Proctor (ASTM D-1557) for more than 10 feet of cover and density tests must be taken and compared to the corresponding proctor horizontally every 100 linear feet and vertically at the following depths (depending on depth of storm drainage pipe): 2 ft, 5 ft, 7.5 ft, 10 ft, and 12.5 ft. Backfill that fails a density test must be recompacted for a length and depth specified by the inspector and retested. In addition, where Moisture Sensitive Material is used as backfill (See Section 600 and standard details) the material must be within 3% (+ or -) of the optimum moisture content for the respective proctor, otherwise it will be wetted (or dried) and reworked as necessary. Backfill with too much moisture that, upon a visual inspection, shows pumping will be rejected and require drying and reworking. All tests must be done in the presence and under the direction of a city inspector. Copies of all tests must be forwarded to the City Engineer or his designated representative within two weeks of the test date. The City Engineer or a city inspector may require testing at intervals greater than described if needed.

840.02 Storm Drainage Pipe Television Inspection - Storm drain pipe shall be inspected by television in the same manner as a wastewater main per specification item 833.

850 PAVEMENT TESTING

850.01 Laboratory Testing of Embankment and Subgrade – Embankment and subgrade will be tested for density and moisture content at the rates specified in Section 200, Street Specifications.

850.02 Laboratory Testing of Asphalt Base and Surface – Asphalt base and surfaces courses must meet the requirements as set forth in Section 200, Street Specifications.

850.03 Laboratory Testing of Flexible Base for Concrete – Flexible base for Portland cement concrete will be tested and must meet the requirements as set forth in Section 200, Street Specifications.

850.04 Laboratory Testing of Concrete Pavement – Portland cement concrete pavement will be tested and must meet the requirements as set forth in Section 200, Street Specifications.

Concrete for Structures
Section 900

910 Portland Cement Concrete

911 Description

911.01 General: This Item shall govern for Portland cement concrete to be used in concrete pavement, concrete structures and other concrete construction.

912 Materials

912.01 General: The concrete shall be composed of Normal Portland Cement or High Early Strength Portland Cement, fine aggregate, coarse aggregate and water, proportioned and mixed as hereinafter provided in these Specifications.

912.02 Cement and Admixtures: Only one brand of cement shall be used in any one structure, except by written permission of the Engineer.

Portland Cement shall meet the requirements prescribed in the Standard Specifications for Port-land Cement, A.S.T.M. C-150.

All cement shall be properly protected against dampness, and no cement will be accepted which has become caked.

An air-entraining agent shall be used in the concrete. The air-entraining agent used shall be one of those permitted under Specifications for Air-Entraining Admixtures for Concrete, A.S.T.M. C-260. The concrete shall be designed to entrain five (5) percent air when Grade 1 or 2 coarse aggregate is used, six (6) percent when Grade 3 or 4 coarse aggregate is used, and seven (7) percent for Grades 5, 6, or 7.

Material removed by decantation, A.S.T.M. C-117	1.0%
Shale, slate or other similar materials	1.0%
Clay Lumps	0.25%
Soft Fragments	3.0%
Other deleterious substances including friable, thin, elongated or laminated pieces	3.0%

The sum of all deleterious ingredients, exclusive of material removed by decantation, shall not exceed 5% by weight.

912.03 Coarse Aggregates: The aggregate shall be free from an excess of salt, alkali, vegetable matter, or other objectionable materials, either free or as adherent coatings.

A. Gravel shall consist of durable particles of gravel, crushed or uncrushed.

B. Crushed stone shall consist of durable particles of rock of reasonable uniform quality throughout.

C. When tested by approved methods, the coarse aggregate shall conform to the gradation requirement shown below:

Agg. Grade No.	Nominal Size (In.)	Percent Retained on Each Sieve								
		2-1/2	2	1-1/2	1	3/4	1/2	3/8	No. 4	No. 8
1	2	0	0-20	15-50		60-80			95-100	
2	1-1/2		0	0-5		30-65		70-90	95-100	
3	1-1/2		0	0-5		10-40	40-75		95-100	
4	1			0	0-5		40-75		90-100	95-100
5	3/4				0	0-10		45-80	90-100	95-100
6	1/2					0	0-10	30-60	85-100	95-100
7	3/8						0	5-30	75-100	
8*	3/8						0	0-5	35-80	90-100

*Grade 8 aggregate for use in extruded curbs

912.04 Fine Aggregate: Fine aggregate shall consist of sand or a combination of sand and not more than fifty (50) percent of stone screenings.

Sand shall be composed of clean, hard, durable uncoated fragments resulting from the crushed stone.

The maximum amount of deleterious substances shall not exceed the following percentages by weight:

Material removed by decantation A.S.T.M. C-117	3.0%
Clay lumps	0.5%
Other deleterious substances such as coal, shale, coated grains and soft flaky particles	2.0%

At the time of its use, the aggregate shall be free from frozen material and all foreign material such as wood, hay, burlap, paper, or dirt which may become mixed with the aggregate in stockpiles.

The sand equivalent shall not be less than 80 and the fineness modulus shall be between 2.30 and 3.10

When tested by approved methods, the fine aggregate shall conform to the following grading requirements:

Aggregate Grade No.	Percent Retained on Each Sieve							
	3/8"	No. 4	No. 8	No. 16	No. 30	No. 50	No. 100	No. 200
1	0	0-5	0-20	15-50	35-75	65-90	90-100	97-100

912.05 Storage of Aggregate: The handling and storage of concrete aggregate shall be such as to prevent the admixture of foreign materials. If the aggregates are stored on the ground, the sites for the stockpiles shall be grubbed, cleared of all weeds and grass, and leveled off. The bottom layer of aggregate shall not be disturbed or used without recleaning. When the Contract requires the use of two (2) or more sizes of aggregates, the different sizes shall be stored in such a manner as to prevent intermixing.

Materials in all stockpiles shall be handled and placed in such a manner that segregation of materials within the pile will be avoided.

913 Classifications and Proportions

913.01 Design: Concrete shall be proportioned as determined by the Consulting Engineer, by absolute volumes and in accordance with the requirements hereinafter set forth. For placement of concrete involving twenty-five (25) cubic yards or less in one continuous placement, the requirements for absolute volume batch design may be waived by the City Engineer, and a mix proportion may be determined by trial mixes; however, the requirements for weighing and measuring materials shall not be waived. The concrete shall be uniform and workable. The minimum cement content, maximum allowable water content, and the maximum slump for the various classes of mixes shall conform to the following:

Class	Min. Cement Sacks per C.Y.	Min. 28-Day Compressive Strength (psi)	Min 7-Day Flexural Strength (psi)	Max. Water/ Cement Ratio Gals/sk	Slump (Inches)
A	5.00	3,000	425	6.50	2-1/2 to 4-1/2
B	4.00	2,000	280	8.00	2-1/2 to 4-1/2
C	6.00	3,600	510	6.00	2-1/2 to 4-1/2
P	5.00	N.A.	555	6.25	1-1/2 to 3

Strength tests shall be tested according to TEX-418-A and TEX-420-A. The maximum amount of coarse aggregate (dry, loose volume) per cubic foot of finished concrete shall not exceed 0.50 cubic feet.

The net amount of water will be the amount added at the mixer, plus the free water in the aggregates. No water allowance will be made for evaporation after batching.

The concrete mix will be designated with the intention of producing concrete which will have compressive strength, when tested on test specimens cured under field laboratory conditions, equal to or greater than the values in the table above.

Fly ash may be substituted for cement up to a maximum of 10% of the cement weight.

913.02 Consistency: The quantity of water to be used will be determined by the Engineer and shall be such as to give a mixture containing the minimum amount of water consistent with the required workability. The quantity of water shall be varied only by the Engineer. In general, the consistency of concrete mixtures shall be such that:

A. The mortar will cling to the coarse aggregate

B. The concrete is not sufficiently fluid to aggregate when transported to the place of deposit.

C. The concrete, when dropped directly from the discharge chute of the mixer, will flatten out at the center of the pile, but the edges of the pile will stand up and not flow.

D. The mortar will show no free water when removed from the mixer.

E. The concrete will settle into place when deposited in forms and, when transported in metal chutes at an angle of thirty (30) degrees with the horizontal, it will slide and not flow into place.

F. The surface of the finished concrete will be free from a surface film of free water.

Any concrete mix failing to meet the above outlined consistency requirements, although meeting the slump requirements, will be considered unsatisfactory; and the mix shall be changed to correct such unsatisfactory conditions. In cases where the characteristics of the aggregates furnished are such that, with the maximum allowable amount of water the specified slump and consistency requirements are not met, the Contractor may provide aggregates of an improved grading, or the

Engineer will modify the mix design to meet the slump and consistency requirements by adding cement as may be necessary.

Consistency and quality of concrete should allow efficient placement and completion of finishing operations before initial set. Retempering shall not be allowed. When field conditions are such that additional moisture is needed for final concrete surface finishing operation, required water shall be applied to surface by fog spray only and shall be held to a minimum. Concrete shall be workable, cohesive, possess satisfactory finishing qualities and of stiffest consistency that can be placed and vibrated into a homogeneous mass within slump requirements specified in Table 3. Excessive bleeding shall be avoided and in no case will it be permissible to expedite finishing and drying by sprinkling the surface with cement powder. No concrete will be permitted with a slump in excess of the maximums shown unless water reducing admixtures have been previously approved. Slump values shall conform to TXDOT Test Method TEX-415-A.

Table 3: Slump Requirements

	Slump, inches	
Type of Construction	**Maximum**	**Minimum**
Cased Drilled Shafts	4	3
Reinforced Foundation Caissons and Footings	3	1
Reinforced Footings and Substructure Walls	3	1
Uncased Drilled Shafts	6	5
Thin-walled Sections (9 inches or less)	5	4
Prestressed Concrete Members	5	4
Precast Drainage Structures	6	4
Wall Sections over 9 inches	4	3
Reinforced Building Slabs, Beams, Columns and Walls	4	1
Bridge Decks	4	2
Pavements, Fixed-form	3	1
Pavements, Slip-form	1-1/2	1/2
Sidewalks, Driveways and Slabs on Ground	4	2
Curb & Gutter, Hand-vibrated	3	1
Curb & Gutter, Hand-tamped or spaded	4	2
Curb & Gutter, Slip-form/extrusion machine	2	1/2
Heavy Mass Construction	2	1
High Strength Concrete	4	3
Riprap and Other Miscellaneous Concrete	6	1
Under Water or Seal Concrete	6	5

914 Quality of Concrete

914.01 Testing Requirements: Concrete made of acceptable materials, of the proportions specified by the Engineer, and in complete accordance with the requirements of the construction methods and details specified for the class of work involved, will be considered as of satisfactory quality.

During the progress of the work, the Contractor shall provide an independent laboratory to test cylinders and/or beams, perform slump and entrained air tests and make temperature checks, as required, to insure compliance with the specifications.

The cost of all testing shall be included in the unit price bid for concrete of the various classes, and shall be paid by the contractor.

914.02 Ready-Mix Concrete: Ready mix concrete meeting all parts of this Specification may be used by the Contractor subject to the following requirements:

A. A written mix design shall be furnished to the City Engineer by the Contractor prior to the use of a ready mix concrete.

B. Supplier of the ready mix concrete must be capable of transporting and pouring concrete within 60 minutes of loading concrete into a mixer truck. When requested by the City Engineer, loading tickets stamped with the correct time and date of loading will be required. Failure to pour concrete within 60 minutes of loading will be grounds for rejection of the concrete. Failure of the ready mix supplier to continuously supply concrete such that placement of concrete proceeds essentially uninterrupted will be grounds for rejection of the ready mix supplier by the City Engineer.

C. A strength test is defined as the average of the breaking strength of two (2) cylinders or two (2) beams as the case may be. Each specimen will be tested in accordance with Test Methods Tex-418-A or Tex-448-A. A minimum of one strength test will be required for every twenty-five (25) cubic yards. Pours under 25 cubic yards will be tested as directed by the City Inspector. Tests for slump and entrained air content shall be required for every set of beams or cylinders made.

D. When the quantity of entrained air is found to be more than three (3) percentage points over or two (2) percentage points under those values given herein, the concrete will be rejected. Repeated rejections of individual loads of ready mix concrete by the City Inspector will be grounds to reject the supplier of the ready mix concrete for the remainder of a project.

920 Concrete Construction

920.01 General: The Contractor shall give the City Engineer sufficient advance notice before starting to place concrete in any unit of the structure to permit the inspection of forms, the reinforcing steel placement, and preparations for casting. Unless authorized by the City Engineer, no concrete shall be placed in any unit prior to the completion of the form work and the placement of the reinforcement.

Concrete placing shall be so regulated as to permit finishing operations to be completed in the daylight hours.

920.02 Weather Conditions: The City Engineer reserves the right to order postponement of the placing operations when, in his opinion, impending weather conditions may result in rainfall or low temperatures which will impair the quality of the finished work. In case rainfall should occur after placing operations are started, the Contractor shall provide ample covering to protect the work. In case of drop in temperature, the provisions set forth in subsection Placing Concrete in Cold Weather, of this item, shall be applied.

920.03 Sequence: The sequence of placing concrete shall be as directed by the Engineer. The operation of depositing and compacting the concrete shall be conducted so as to form a compact, dense, impervious mass of uniform texture which shall show smooth faces on all surfaces. The placing shall be so regulated that the pressures caused by the plastic concrete shall not exceed the loads used in the design of forms.

920.04 Methods: The method and manner of placing shall be such as to avoid the possibility of segregation or separation of the aggregate or the displacement of the reinforcement. Concrete shall not have a free fall of more than five (5) feet. The spattering of forms or reinforcement bars shall be prevented. Any hardened concrete splatter ahead of the plastic concrete shall be removed.

920.05 Cold Joints: Cold joints in a monolithic placement shall be avoided. Not more than one (1) hour shall elapse between adjacent or successive placements of concrete. The time requirement may be extended by 1/2 hour when the concrete contains a normal dosage of retarding admixture. An approved retarding agent shall be used to control stress cracks and/or cold joints in placements where differential settlement and/or setting time may induce stress cracking.

920.06 Chutes, Troughs, or Pipes: Chutes, troughs, or pipes used as aids in placing concrete shall be arranged and used so that the ingredients of the concrete will not be separated. Open troughs and chutes shall extend, if necessary, down inside the forms or through holes left in the forms; or the ends of such chutes shall terminate in vertical downspouts. All chutes, troughs, and pipes shall be kept clean and free from coatings of hardened concrete by a thorough flushing with

water before and after each placement. Water used for flushing shall be discharged clear of the concrete in place and in a location acceptable to the Engineer. The use of chutes in excess of thirty-five (35) feet total length for conveying concrete will not be permitted except by specific authorization from the City Engineer.

920.07 Consolidation: All concrete shall be well compacted and the mortar flushed to the surface of the forms by continuous working with concrete spading implements or mechanical vibrators of an approved type. The vibrators shall be applied to the concrete immediately after deposit and shall be moved throughout the mass, thoroughly working the concrete around the reinforcement, embedded fixtures, and into the corners and angles of the forms until it has been reduced to a plastic mass. The mechanical vibrator shall not be operated so that it will penetrate or disturb layers placed previously which have become partially set or hardened. The vibration shall be of sufficient duration to accomplish thorough compaction and complete embedment of reinforcement and fixtures but shall not be done to an extent that will cause segregation. Vibration shall be supplemented by hand spading if necessary to insure the flushing of mortar to the surface of all forms.

920.08 Forms: Forms shall be practically mortar-tight, rigidly braced and strong enough to prevent bulging between supports. Forms may be constructed of plywood not less than 1/2" in thickness. The grain of the face plies on plywood forms shall be placed parallel to the span between the supporting studs or joists.

All metal appliances used inside of forms for alignment purposes shall be removed to depth of at least 1/2" from the concrete surface. Any tire wires used shall be cut back at lease 1/2 inch from the face of the concrete. Metal and wooded spreaders which are separate from the forms shall be removed entirely as the concrete is being placed.

The facing of all forms shall be treated with bond breaking coating of such composition that will not discolor the concrete surface. Care shall be exercised to prevent coating the reinforcing steel.

Forms shall be filleted at all sharp corners and edges with triangular chamfer strips measuring 3/4" on the sides.

Each part of the forms shall be filled by depositing concrete directly as near its final position as possible. The coarse aggregate shall be worked back from the face of the forms and concrete shall be forced under and around the reinforcement bars without displacing them. Depositing large quantities at one point in the forms and running or working it along the forms will not be allowed.
After the concrete has taken initial set, the forms shall not be jarred or any strain placed on projecting reinforcement.

Forms for vertical surfaces may be removed when the concrete has aged not less than 12 hours. Inside forms (walls and top slabs) for box culverts and sewers may be removed after concrete has aged not less than 24 hours.

921 Curing

921.01 General: The Contractor shall inform the Engineer of the methods proposed for curing; shall provide the proper equipment and material in adequate amounts; and shall have the proposed methods, equipment and material approved prior to placing concrete. The choice of curing methods shall be at the option of the Contractor.

All concrete shall be cured for a period of four (4) curing days. Top slabs of direct traffic culverts shall be cured for ten (10) days. A curing day is defined as a calendar day when the temperature, taken in the shade away from artificial heat, is above 50 F for at least 19 hours, or on colder days if satisfactory provisions are made to maintain the temperature of all surface of the concrete above 40 F for the entire 24 hours. The required curing period shall begin when all concrete therein has attained its initial set.

921.02 Types:

A. Form Curing: When forms are left in contact with the concrete, other curing methods will not be required except for exposed surfaces and for cold protection.

B. Water Curing: All exposed surfaces of the concrete shall be kept wet continuously for the required curing time.

C. Wet Mat Curing: This curing method shall consist of keeping the concrete continuously wet by maintaining wet cotton mats in direct contact with the concrete for the required curing time.

D. Water Spray: This curing method shall consist of overlapping sprays or sprinklers that keep all uniformed surfaces continuously wet.

E. Membrane Curing: Unless otherwise provided herein or shown on the plans, either Type 1-D or Type 2 membrane curing compound may be used. Membrane curing shall not be applied to dry surfaces, but shall be applied just after free moisture has disappeared. When membrane curing is used for complete curing, the film shall remain unbroken for the minimum curing period specified.

922 Dowels and Anchor Bolts

922.01 Placement: Dowels and anchor bolts may be cast-in-place or installed by grouting with grout, epoxy or epoxy mortar. Holes for grouting may be formed or drilled. Holes shall be thoroughly cleaned of all loose material, oil, grease, or other bond breaking substance and blown clean with filtered compressed air. The void between the hole and dowel or bolt shall be completely filled with grouting material.

Holes for dowels shall be a minimum of 12 inches deep. When grout or epoxy mortar is used, the diameter of the hole shall not be less than twice the dowel or bolt diameter nor more than the diameter plus 1-1/2 inches. When using epoxy, the hole shall be 1/16 inch to 1/4 inch greater than the dowel or bolt diameter.

923 Placing Concrete in Adverse Weather

923.01 Cold Weather: No concrete shall be placed when the atmospheric temperature is at or below 40°F. (taken in the shade away from artificial heat) unless permission to do so is given in writing by the City Engineer. When such permission is given, or in cases where the temperature drops below 40F. after the concreting operations have been started, the Contractor shall furnish sufficient canvas and framework or other type of housing to enclose and protect the structure in such a way that the air around the forms and fresh concrete can be kept at a temperature not less than 50°F. for a period of five days after the concrete is placed. Sufficient heating apparatus such as stoves or steam equipment and fuel to furnish all required heat shall be supplied.

It is understood that the Contractor is responsible for the protection of concrete placed under any and all weather conditions. Permission given by the City Engineer to place concrete during freezing weather will in no way relieve the Contractor of the responsibility for satisfactory results. Should concrete placed under such conditions prove unsatisfactory, it shall be removed and replaced at the expense of the Contractor.

923.02 Hot Weather: Adequate measures shall be taken by the Contractor to insure concrete placed during hot and/or particularly dry weather does not "flash set." No concrete will be placed which has a temperature of 95°F. or higher when taken at the job site immediately before placement.

Acceptable preventive measures include the addition of chopped or cubed ice to the concrete mixture. Each 100 lbs. of ice added will be considered equal to the addition of 12 gallons of water. In no case will the addition of more than 700 lbs. of ice be permitted per 8 cubic yard load of concrete.

Temperature control of coarse aggregate stockpiled outdoors is acceptable providing the aggregate does not attain a coating which inhibits proper binding of the cement.

930 Payment

930.01 Measurement and Payment: The work performed and materials furnished in accordance with this Item and measured by the square yard or cubic yard will be paid for at the unit price bid for the various classes of concrete. This price shall be full compensation for furnishing, hauling and mixing all concrete materials; for furnishing, bending, fabricating, splicing, welding and placing the required reinforcement; for all clips, blocks, metal spacers, ties, wire or other materials used for fastening reinforcement in place; for placing, finishing and curing all concrete; for all grouting and pointing; for furnishing and placing drains; for furnishing and placing metal flashing strips; for furnishing and placing expansion-joint material required by this Item; for all sampling and testing for compliance; and for all forms and falsework, labor, tools, equipment and incidentals necessary to complete the work.

940 Concrete Structures

941 Curb & Gutter

See section 280, Concrete Curb & Gutter

942 Sidewalks

942.01 Description: This item shall consist of concrete sidewalks composed of Portland Cement concrete, constructed as herein specified on an approved subgrade, in conformity to the lines, grades and details established by the Engineer.

942.02 Construction Methods: The subgrade shall be excavated and shaped to the lines, grades and cross section as indicated or as directed by the Engineer and shall be thoroughly compacted. A cushion 2" minimum thickness of crushed screenings, gravel and sand, crushed rock, or coarse sand shall be spread, wetted thoroughly, tamped and leveled. The sand cushion shall be moist at the time the concrete is placed.

If the subgrade is undercut by more than 4 inches or the natural ground is below top of subgrade by more than 4 inches then necessary backfill shall be made with an approved material and compacted with a mechanical tamper. Hand tamping will not be permitted.

Where the subgrade is rock or gravel, 70 percent of which is rock, the 2 inch cushion need not be used. The City Engineer will determine if the subgrade meets the above requirements.

Forms shall meet the requirements as specified under Section 920.08.
Expansion joint material 3/4 inch thick, shall be provided where the new construction abuts an existing structure, sidewalk or driveway. Similar expansion material shall be placed around all obstructions protruding through the sidewalk. The expansion joint material shall be placed vertically and shall extend the full depth of the concrete. Maximum spacing of expansion joints shall be 40 feet. Weakened plane joints shall be spaced at 5 feet on center. Normal dimensions of the weakened plane joints shall be 1/4 inch deep. All joints shall be 90 degrees to centerline of walk and shall match any previously placed concrete joints.

Reinforcement for sidewalks shall be grade 60 steel conforming to ASTM A-615 and consisting of 1 layer of 6X6 - W2.9 X W2.9 wire fabric or #3 bars, placed not more than 18 inches on center both directions. All reinforcement shall be placed equidistant from the top and bottom of the concrete. Care shall be exercised to keep steel in its proper position during the depositing of the concrete. Splices in wire fabric shall overlap sufficiently to allow two pairs of transverse wires to be tied together and no splice of less than 6 inches will be permitted. Splices in the #3 bars shall have a minimum lap or 12 inches.

Where driveways cross sidewalks, additional reinforcing shall be placed in the sidewalk so as indicated.

The concrete, its materials and placement, shall meet the requirements specified under Section 910 “Portland Cement Concrete”.

The Contractor shall provide for independent lab testing for compliance to the specifications. Required tests and frequency shall be as shown in Section 914 “Quality of Concrete”.

942.03 Measurement: Accepted work performed as prescribed in this section will be measured by the square yard of surface area of Concrete Sidewalk.

942.04 Payment: The work performed as prescribed by this item will be paid for at the unit price bid per square yard for Concrete Sidewalk. This price shall be full compensation for preparing the subgrade, for furnishing and placing all materials (including cushion material), all reinforcing steel, joints, expansion joint materials, and for all other materials, manipulations, labor, tools, equipment, finishing, curing and incidentals necessary to complete the work.

943 Concrete Box Culverts

943.01 Description: This item shall govern the materials used and the constructing, furnishing, and placing of concrete box culverts and wing walls on a prepared grade at the location shown in accordance with the construction plans details.

943.02 Types: Unless otherwise indicated, the Contractor shall have the option of furnishing cast-in-place, precast (formed), or precast (machine made) box culverts.

A. When precast box culverts are used under traffic, the design loads shall consist of the impact load, the dead load, and the live load meeting the requirements of ASTM C-789 or ASTM C-850. Each box section shall bear the name or trademark of producer, date of manufacture, and the box size.

B. Cast-in-place concrete boxes shall conform to the details shown on the plans and to the requirements of Section 910 "Portland Cement Concrete".

943.03 Construction Methods: Excavation, bedding, and backfill shall be in accordance with the requirements of Section 600 "Pipe and Appurtenances". When two pre-cast sections are fitted together on a flat surface, in the proper position, the joint opening shall not exceed one (1) inch.

943.04 Testing: The Contractor shall provide independent laboratory testing of cast-in-place box culverts. Test specimens shall be in accordance with Section 914 "Quality of Concrete".

944 Reinforcing Steel

944.01 Description: This Item shall govern for the furnishing and placing of deformed and smooth reinforcing steel, of the size and details shown on the plans and in accordance with this Item.

944.02 Materials: Unless otherwise shown on the plans or specified herein, the reinforcing steel shall be Grade 60. Smooth round bars shall be designated by size number through No. 4. Smooth bars above No. 4 shall be designated by diameter in inches. The nominal size, area and weight of reinforcing steel bars covered by this specification are as follows:

Bar Size Number	Nominal Diameter (Inches)	Nominal Area (Sq. Inches)	Weight per Lineal Foot
2	0.250	0.05	0.167
3	0.375	0.11	0.376

4	0.500	0.20	0.668
5	0.625	0.31	1.043
6	0.750	0.44	1.502
7	0.875	0.60	2.044
8	1.000	0.79	2.670
9	1.128	1.00	3.400
10	1.270	1.27	4.303
11	1.410	1.56	5.313
14	1.693	2.25	7.650
18	2.257	4.00	13.60

Wire for fabric reinforcement shall conform to ASTM A82 or A496. Wire fabric shall conform to ASTM A185 or A497. Where deformed wire is required, the size number shall be preceded by "D" and for smooth wire the prefix shall be "W". Welded wire fabric will be designated as shown in the following example:

6 x12 – W16 x W8; indicating six (6) inch longitudinal wire spacing and twelve (12) inch transverse wire spacing with smooth number 16 wire longitudinally and smooth number 8 wire transversely.

944.03 Splicing: Splicing of bars, lap spliced or welded, shall be as shown or plans or specified herein. Splices not provided for on the plans will be permitted in slabs 15 inches or less in thickness, columns, walls and parapets. Splices will not be permitted in bars 30 feet or less in plan length. For bars exceeding 30 feet in plan length, the distance center to center of splices shall not be less than 30 feet minus one splice length, with no more than one individual bar length less than 10 feet.

MINIMUM LAP REQUIREMENTS

SIZE	UNCOATED	COATED
No. 3	1'-0"	1'-6"
No. 4	1'-6"	2'-3"
No. 5	1'-10"	2'-9"
No. 6	2'-3"	3'-4"
No. 7	3'-0"	4'-6"
No. 8	3'-9"	5'-7"
No. 9	4'-8"	7'-0"
No. 10	5'-7"	8'-4"
No.11	6'-7"	9'-10"

Welded wire fabric shall be spliced using a lap length that will include the overlap of a minimum of two (2) cross wires plus two (2) inches on each sheet or roll.

For box culvert extensions with less than one (1) foot of fill, the existing longitudinal bars shall have a lap with the new bars as shown in above table. For extensions with more than one (1) foot of fill, a minimum of six (6) inch lap will be required.

944.04 Placing: Unless otherwise shown on the plans, dimensions shown for reinforcement are to the centers of the bars. Reinforcement shall be placed as near as possible in the position shown on the plans. In the plane of steel parallel to the nearest surface of concrete, bars shall not vary from plan placement by more than 1/12 of the spacing between bars. In the plane of the steel perpendicular to the nearest surface of concrete, bars shall not vary from plan placement by more than 1/4 inch. Cover of concrete to the nearest surface of steel shall meet the above requirements but shall never be less than one (1) inch.

The reinforcement shall be accurately located in the forms, and firmly held in place, before and during concrete placement, by means of bar supports, adequate in strength and number in order to prevent displacement and to keep the steel at the proper distance from the forms. Bars shall be supported by standard bar supports with plastic tips, plastic bar supports, or precast mortar or concrete blocks when supports are in contact with removable or stay-in-place forms.

Mortar or concrete blocks shall be anchored to the steel with a suitable tie wire. Bar supports shall be placed in rows at four (4) feet maximum spacing in each direction. Before concrete placement, all mortar, mud, dirt, etc., shall be cleaned from the reinforcement. If the reinforcement is not adequately supported or tied to resist settlement, floating upward, overturning of truss bars, or movement in any direction during concrete placement, concrete placement will be halted until corrective measures are taken.

944.05 Storing: Steel reinforcement shall be stored above the ground upon platforms, skids, or other supports and shall be protected from damage and deterioration. When placed in the work, reinforcement shall be free from dirt, paint, grease, oil, or other foreign materials.

944.06 Payment: The work performed, materials furnished, and all labor, tools, equipment and incidentals necessary to complete the work under this Item will not be measured or paid for directly, but will be considered subsidiary to the various bid items of the contract.

945 Concrete Admixtures

945.01 Description: This item shall govern material requirements of admixtures for Portland cement concrete.

945.02 Materials: All admixture submittals must be approved by the Engineer. No admixture shall be chloride-based or have chloride(s) added in the manufacturing process. Admixtures must be pretested by the Texas Department of Transportation (TXDOT) Materials and Tests Engineer and be included in the State's current approved admixture list. All admixtures must retain an approved status through the duration of a mix design's one-year approval period.

945.03 Air-Entraining Admixture: An "Air Entraining Admixture" is defined as a material which, when added to a concrete mixture in the proper quantity, will entrain uniformly dispersed microscopic air bubbles in the concrete mix. The admixture shall meet the requirements of ASTM Designation: C 260 modified as follows:

(a) The cement used in any series of test shall be either the cement proposed for the specific work or a "reference" Type I cement from one mill.

(b) The air entraining admixture used in the reference concrete shall be Neutralized Vinsol Resin.

945.04 Water-Reducing Admixture: A "Water-reducing Admixture" is defined as a material which, when added to a concrete mixture in the correct quantity, will reduce the quantity of mixing water required to produce concrete of a given consistency and required strength. This admixture shall conform to ASTM C 494, Type A.

945.05 Accelerating Admixture: An "Accelerating Admixture" is defined as an admixture that accelerates the setting time and the early strength development of concrete. This admixture shall conform to ASTM C 494, Type C. The accelerating admixture will contain no chlorides.

945.06 Water-reducing, Retarding Admixture**:** A "Water-reducing, Retarding Admixture" is defined as a material which, when added to a concrete mixture in the correct quantity, will reduce the quantity of mixing water required to produce concrete of a given consistency and retard the initial set of the concrete. This admixture shall conform to ASTM C 494, Type D.

945.07 High-range Water Reducing Admixtures**:** A "High-range Water Reducing Admixture", referred to as a superplasticizer, is defined as a synthetic polymer material which, when added to a low slump concrete mixture increases the slump without adversely affecting segregation, impermeability or durability of the mix. This admixture shall conform to ASTM C 494, Type F or G.

945.08 Fly Ash: Fly ash used in Portland cement concrete as a substitute for Portland cement or as a mineral filler shall comply with TXDOT Materials Specification D-9-8900 and be listed on TXDOT's current list of approved fly ash sources. Fly ash obtained from a source using a process fueled by hazardous

waste (30 Texas Administrative Code, Section 335.1) shall be prohibited. This applies to any other specification concerning the use of fly ash. Contractor shall maintain a record of source for each batch. Supplier shall certify that no hazardous waste is used in the fuel mix or raw materials.

945.09 Certification and Product Information**:** The Contractor shall submit the name of the admixture proposed and manufacturer's certification that the selected admixtures meet the requirements of this item and of ASTM C 260 and C 494 as applicable. Admixtures for a mix design shall be of the same brand. If more than one admixture is proposed in the concrete mix, a statement of compatibility of components shall accompany certification. Manufacturer's product literature shall specify when in the batching/mixing operation the admixture must be added.

The Engineer may request additional information such as infrared spectrophotometry scan, solids content, pH value, etc., for further consideration. Any unreported changes in formulation discovered by any of the tests prescribed herein may be cause to permanently bar the manufacturer from furnishing admixtures for Owner's work.

945.10 Construction Use of Admixtures**:** All admixtures used shall be liquid except high-range water reducers which may be a powder. Liquid admixtures shall be agitated as needed to prevent separation or sedimentation of solids; however, air agitation of Neutralized Vinsol Resin will not be allowed.

No admixture shall be dispensed on dry aggregates. Admixtures shall be dispensed at the batching site separately, but at the same time as the mixing water. Only high range water reducers may be introduced into the mix at the job site.

When other admixtures are used with fly ash, the amount of the other admixture to be used shall be based on the amount of Portland cement only and not the amount of Portland cement and fly ash.

When high-range water reducers are to be added at the job site, transit mixers shall be used. Admixture manufacturer literature shall indicate recommended mixing methods and time for the specific equipment and mix design used. The transit mix equipment shall not be loaded in excess of 63 percent of its rated capacity to ensure proper mixing of the admixture at the site. If during discharging of concrete a change in slump in excess of 30% is noted, the remaining concrete shall be rejected unless prior approval was given by the Engineer to retemper a load with a second charge of admixture. Retempering with water shall not be allowed.

Accelerating admixtures will not be permitted in combination with Type II cement.

All mixes with air entrainment shall have a minimum relative durability factor of 80 in accordance with ASTM C 260. Dosage of air entrainment admixtures may be adjusted by the Contractor to stay within the specified tolerances for air entrainment of Section 914.02(D).

946 Fibrous Concrete

946.01 Description: This item shall govern for the furnishing and placing of concrete reinforced with fibrous mesh in accordance with these specifications and with details as shown on the plans.

946.02 Materials:

A. Concrete: All concrete shall conform to the requirements of Section 910, "Portland Cement Concrete".

Unless otherwise shown on the plans or in the bid item, the concrete shall be Class A concrete.

B. Reinforcement: Reinforcement shall be 100% virgin polypropylene fibrillated fibers specially manufactured for use as concrete reinforcement and meeting the requirements of ASTM C-1116. The fibrous material shall not contain reprocessed olefin. Each container of fibrous material shall bear the manufacturer's name and/or trademark and the net weight of fibrous material in the package.

The specific gravity of the fibrous material shall be 0.91 plus or minus .05. The tensile strength shall be 80 to 110 psi. The lengths of the fibrous material shall be 1/2, 3/4, 1 1/2 and 2 inches in length.

Unless otherwise shown on the plans, each cubic yard of concrete shall contain no less than 1 1/2 pounds of fibrous material. The fibrous material shall be added to the concrete mix at the time the mix is batched.

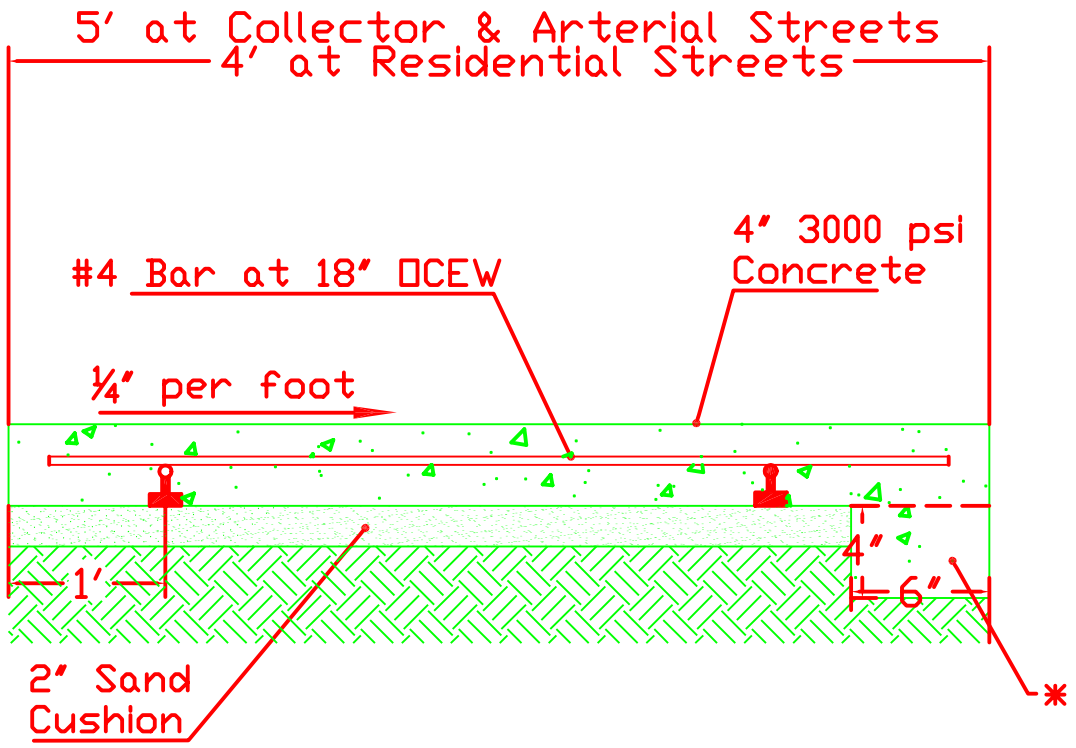

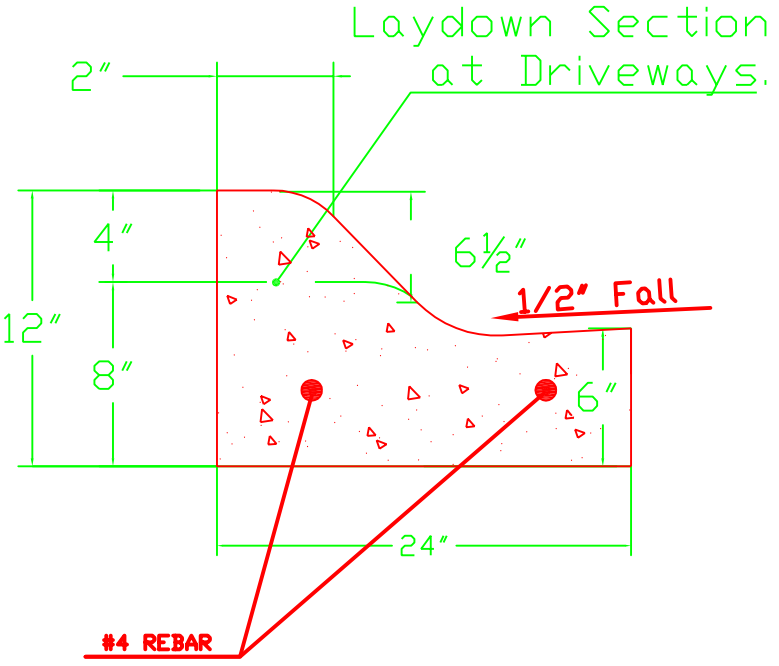

SIDEWALK NOTES:

SIDEWALKS WILL BE CONSTRUCTED TO COMPLY WITH ALL ADA AND TDLR STANDARDS

EXPANSION JOINTS (¾") SHALL BE INSTALLED NO FURTHER THAN 40 FEET APART. DUMMY JOINTS WILL BE INSTALLED EVERY 5 FEET. SEE CITY OF KERRVILLE STANDARD SPECIFICATIONS, SECTION 942, FOR MORE DETAILS.

1.5"–2" CHAIRS SHALL BE USED EVERY 5 LF OR AS NECCESSARY TO HOLD REINFORCEMENT ABOVE THE GROUND AND BE PLACED 1' FROM OUTSIDE EDGE OF SIDEWALK,

* FOOTER ONLY NEEDED IF SIDEWALK ABUTTS CURB.

CURB NOTES:

EXPANSION JOINTS WILL BE SMOOTH WITH SLEEVES ON ONE END TO ALLOW MOVEMENT.

STEEL IN CURB WILL BE #4 BARS CENTERED VERTICALLY IN CONCRETE. NO STEEL WILL COME WITHIN 2 INCHES OF EDGE OF CONCRETE.

DEPTHS AND TYPES OF BASE MATERIAL UNDERNEATH CURB VARIES WITH STREET DESIGNATIONS. SEE CITY OF KERRVILLE SPECIFICAITON SECTIONS 290.01 – 290.04.

SEE SECTION 280, CITY OF KERRVILLE STANDARD SPECIFICATIONS FOR MORE DETAILS.

Curb & Sidewalk Details

City of Kerrville

Standard Specifications

SIZE	FSCM NO.	DWG NO.	REV
		980.01	
SCALE		SHEET	

Electrical for Water and Sewer Stations
Section 1000

1010 General

The contractor shall furnish all labor, supervision, materials, tools, equipment, and services necessary for the complete installation of the electrical power and control wiring to the Lift Station. In general, the work shall consist of, but is not limited to the following items:

A. The Contractor shall provide all temporary electrical wiring for power, tools, and lights as required at the project site and shall remove the same on completion of the work.

B. The Contractor shall coordinate his work with authorities having jurisdiction to arrange for required permits, inspections, and other required services.

C. The Contractor shall furnish and install electrical feeders, control circuits, and other electrical equipment including lighting fixtures as shown on the Drawings or specified herein.

D. The Contractor shall make all electrical connections required for equipment to be provided by equipment manufacturers or others at the project site.

E. The Contractor shall install a grounding system as required by Code, and as specified herein.

F. It is the intent of these specifications and the accompanying Drawings that the Contractor furnish and install a system complete in every respect and ready to operate. All miscellaneous items and accessories required for such installation and for the correct and convenient operation of the entire installation, whether or not each item or accessory is shown on the Drawings or mentioned in the Specifications shall be furnished and installed. All electrical materials must bear the Underwriter's Laboratory seal and be guaranteed for one year unless otherwise stated herein.

1020 Applicable Codes

All work and materials shall conform to the current edition of the following standards or codes:

National Electric Code (NEC)
National Electric Manufacturer's Association (NEMA)
National Electric Safety Code (NESC)

National Fire Protection Association (NFPA)
Occupational Safety and Health Administration (OSHA)
American National Standards Institute (ANSI)
Illuminating Engineering Society (IES)
Institute of Electrical and Electronic Engineers (IEEE)

All work shall be in compliance with all applicable state and local ordinances, and Regulations relating to the building and public safety.

In those instances where capacities, sizes, etc., of electrical equipment, devices, or materials as designated in these Specifications, or indicated on the Drawings, are in excess of the minimum requirements of the NEC, such designated sizes and or capacities shall prevail.

1030 Contract Documents

1030.01 Contract Drawings: The accompanying Drawings are diagrammatic and indicate only approximate locations of feeders, circuits, panels, switches, lights, etc., except in those cases where specific notes appear. Exact locations are subject to the Engineer=s approval and may differ a reasonable amount from the approximate locations shown on the Drawings without additional cost to the Owner.

1030.02 Submittals: The Contractor shall submit a minimum of three (3) copies of Shop Drawings of electrical equipment to the Engineer for approval prior to ordering or manufacturing this equipment. The Shop Drawings shall include equipment or systems as shown on the Drawing and stated in the Specifications, including electrical control related cabinets and equipment. Shop Drawings shall include the manufacturer′s printed information with each labeled as on the Contract Documents for identification. The information submitted shall include specific dimensions, voltage ratings, wiring diagrams, nameplate data, as well as detailed equipment drawings of fabricated items, installation data, and other pertinent information. Where literature is submitted covering a group or series of similar items, the items in consideration shall be clearly indicated. All submittals shall be assembled in one brochure.

The Contractor shall be responsible for checking Shop Drawings and wiring diagrams for compliance with the Contract Drawings and Specifications, including spare part requirements, arrangements, and performance; and shall indicate same by stamp and signature on all submittals before submitting to the Engineer for approval.

Equipment or materials shall not be ordered until the shop drawing submittals have been approved in writing by the Engineer. Shop drawings shall be submitted for, but are not limited to the following items:

1. Wire, Cable, and Conduit
2. Wiring devices
3. Circuit breakers, combination type motor starters, and all main power equipment
4. Triplex pump controller (DFS PCU-001)
5. Wiring schematics

The Engineer's approval does not relieve the Contractor of final responsibility. These submittals are a means of coordinating the work in relation to the Contract Documents and for the proper selection and installation of equipment. All materials and equipment shall be subject to final acceptance by the Engineer at the completion of the contract.

1030.03 As-Built Drawings: The Contractor shall provide to the Engineer a complete record set of blueline prints which shall be corrected daily with daily notations, and shall show every change from the original Contract Drawings. This set of prints shall be kept on the job site and shall be used only as a record set. This shall not be construed as authorization to make changes in the layout without definite instructions in each case. Upon completion of the work, a set of As-Built transparencies, together with six sets of blueline prints, shall be delivered to the Engineer. Failure to submit the As-Built transparencies may delay the final acceptance of the project.

In addition, the Contractor shall provide the Engineer/Owner with a complete conduit, wire, and cable schedule. The schedule shall identify all conduits, their point of origin and destination, and the number of wires and cables in each. The Engineer shall check the As-Builts and wire and cable schedule.

1040 Equipment

1040.01 General: All materials purchased shall be in new condition and specification grade. Where manufacturers names and model numbers are used on the Drawings or in the Specifications, it is not the intention to discriminate against an equal product or other manufacturers, but rather to set a standard of quality and shall not be construed as limiting competition. The words, or approved equal shall be assumed to follow any material without specific authorization in writing from the Engineer. The substitution shall be listed by manufacturer, catalog number, and all other data necessary for comparison. Should a substitution be accepted under the above provisions, and should the substitution prove defective or otherwise unsatisfactory for the intended service, within the warranty period, the Contractor shall replace the substitution with the equipment or material specified, and on which the Specification required him to base his proposal.

The storage and protection of materials and equipment shall be in accordance with the manufacturer's recommendations and as supplemented herein. Electrical

equipment and material shall not be stored on bare earth. All electrical equipment and material shall be protected from physical damage and damage due to the weather (moisture). Failure to comply with the above shall be sufficient cause for rejection of the equipment or materials in question. Any factory finish that becomes marred, stained, or otherwise damaged shall be fully and satisfactorily restored.

1040.02 Conduit: All wiring shall be installed in conduit no smaller than 3/4" trade size unless noted otherwise on the Drawings. Conduits shall be UL-listed and approved for the use intended. Furnish and install grounding bonding jumpers where required by NEC.

Schedule 40, heavy wall, rigid polyvinyl chloride (PVC) conduit shall be installed in all underground or under slab locations unless otherwise noted on the Drawings. PVC couplings, fittings, bell ends, caps, adaptors, and conduit elbows shall be of the same manufacturer as the PVC conduit. Use approved PVC cement at all conduit joints to produce a sealed, liquid tight conduit system.

Where underground conduits turn up and are exposed to mechanical damage, the exposed portion along with its connected long radius bend shall be galvanized rigid steel conduit protected against corrosion by two coats of asphalt paint.

Rigid galvanized steel conduit shall be installed in all damp or wet locations, inside and outside of buildings and structures, or where conduit is exposed to mechanical damage. Conduits shall be furnished in 10-foot lengths with both ends threaded and with a coupling screwed on one end. Conduits, couplings, and fittings shall be hot-dipped galvanized, both inside and outside.

Liquid-tight flexible metal conduit shall be installed for all motor connections and where conduit connections are subject to vibration or movement. Connectors shall be insulated, gasketed, threaded, and furnished in straight sections and 45 and 90-degree angles.

1040.03 Wires and Cables: All wiring used in this installation shall be soft drawn, annealed copper wire with a conductivity of not less than 98 percent of that of pure copper and shall have a 600 volt insulation.

Wiring installed in buildings and dry locations shall have type THHN, THW, or THWN insulation rated for 90 degrees Celsius. Wiring installed in wet locations and outside of buildings shall have type XHHW insulation rated for 75 degrees Celsius.

Feeder wire for motors smaller than 10 horsepower shall be as specified. Feeder wires and cables for motors larger than 10 horsepower shall have type XHHW insulation rated for 75 degrees Celsius and suitable for wet locations.

All conductors shall be color coded to identify the voltage and phase in each according to the following:

480 VOLT 3-PHASE, 3-WIRE
Phase A - Yellow
Phase B - Brown
Phase C - Violet
Ground - Green

120/240 VOLT, 3-PHASE, 4-WIRE
Phase A - Red
Phase B - Black
Phase C - Orange
Neutral - White
Ground – Green

120/240 VOLT, 1-PHASE, 3-WIRE
Phase A – Red
Phase B – Black
Neutral – White
Ground – Green

Large wires and cables and other types of wire shall have one inch wide colored Scotch tape on the ends of each conductor. All circuits shall be identified by wire markers in panelboard gutters, pull boxes, control panels, etc. Markers shall be premarked, self –adhesive wrap around cloth-type similar to E-Z code or Brady "Perma" Code or equal.

1040.04 Boxes and Fittings:

A. Junction and Pull Boxes: Junction and pull boxes shall be constructed of code-gauge galvanized sheet steel with no knockouts. Front covers shall be screw or hinged door with rigid handle type and all junction and pull boxes shall be gasketed. Covers larger than 3' by 4' shall be split.

B. Outlet Boxes: Ceiling outlet boxes shall be galvanized and shall be 4" octagonal by 1-1/2" or 2-1/8" deep for exposed or hung ceiling use unless otherwise specified. Use 3/8" fixture studs through the back of the box where required for mounting a fixture. Furnish plaster rings for plaster surfaces where required. Where a 1" trade size conduit enters an outlet box, a 4-11/16" square box shall be provided. Wall outlet boxes for switches and convenience outlets shall be galvanized formed sheet steel, 4" square by 1-1/2" deep for flush mounted outlets with extension rings provided. Wall outlet boxes for surface mounting shall be zinc coated cast metal type FS or FD.

1040.05 Circuit Breakers:

A. General: Molded case circuit breakers shall be used for the protection of all branch circuits unless otherwise noted on the Drawings. Circuit breakers shall be UL-listed; have a quick make, quick break, over-center toggle type mechanism;

and be trip-free type with trip indication by handle position. Two and three pole circuit breakers shall have common trip. Contacts shall be of a silver alloy material.

Where circuit breakers are used to switch lighting fixtures, heaters, etc., that circuit breaker shall be UL-listed for switching duty.

B. Molded Case Circuit Breakers

1. Circuit breakers shall be 1" wide for one pole, 2" wide for two pole, and 3" wide for three pole. No 1/2" wide or tandem circuit breakers shall be used. Circuit breakers with 250 ampere frame sizes and larger shall have a front adjustable magnetic strip.

2. Branch thermal magnetic circuit breakers mounted in panelboards shall have fixed magnetic trip, normal duty rating for 10,000 amperes interrupting current. Provide bolt on type circuit breakers with trip ratings using Square D. Main circuit breakers shall have an interrupting rating equal to that of the panelboard.

3. Current limiting thermal magnetic circuit breakers shall be used for interrupting currents of 42,000 amperes or greater. Current limiting shall have a non-fusable type independently operating limiter section in series with each pole that shall automatically reset after circuit interruption. Current limiting circuit breakers shall be Square D “I-Limiter”.

4. Instantaneous trip, magnetic only circuit breakers shall be used in conjunction with, and immediately ahead of motor running overcurrent protective devices as herein specified or noted on the Drawings as motor circuit protector (MCP). They shall have a single front accessible and adjustable magnetic trip setting which simultaneously sets the magnetic trip level of each individual pole. Provide a pushbotton to trip the circuit break for testing. Instantaneous circuit breakers shall be Square D “Mag Guard”.

1050 Installation and Execution

1051 General

1051.01 Site Visit: Each bidder shall visit the site of the proposed construction in order to fully understand the facilities, difficulties, and restrictions attending the execution of work on which he is bidding. No additional compensation will be allowed for work or items omitted from the original proposal due to his failure to visit the job site or to inform himself regarding such matters affecting

performance of work in this Contract or necessary for installation and completion of work included therein.

1051.02 Coordination: As it is not within the scope of the Drawings to show all necessary offsets and obstructions or structural conditions, it shall be the responsibility of the Contractor to install the work in such a manner that it will conform to the structure, avoid obstructions, and not interfere with other trades. Cooperation with other trades and related operations shall be considered a part of this work in order to effect timely and accurate completion of this contract in the proper and correct sequence.

1052 Installation

1052.01 Conduits: Installation

A. All underground conduits shall be installed in trenches. The excavation shall be to a depth and width to allow 24" cover. The trench shall be cut to a flat bottom, true and uniform grade. Where rocks are encountered, they must removed to a depth of 6" below the finished trench bottom and holes refilled with tamped earth. Backfill shall be applied in 12" layers with each tamped in place. Backfill material shall be free from rocks and other foreign material.

B. If electrical conduit conflicts with water mains, the conduit shall be placed a minimum of 6" above the water main.

C. All exposed conduit shall be installed in a neat and workmanlike manner, and as far as practical, it shall be installed parallel and perpendicular to the building lines. Multiple runs shall be supported by Unistrut conduit hangers. Each conduit shall be individually clamped at each Unistrut.

D. All exposed conduit shall be rigidly supported at intervals not exceeding 7 feet or as dictated by the NEC. Exposed conduit shall be clamped with hot-dipped galvanized malleable iron conduit clamps or trapeze supports. Wire ties are not acceptable. Bends and offsets in conduit shall be made with standard factory elbows made for the purpose, or with field bending devices that will produce uniform bends without damaging the finish or reducing the cross sectional strength of the conduit. Do not install bends or offsets in which pipe is crushed, deformed, or otherwise damaged.

E. Conduit shall be cut square with ends reamed and drawn up tight with approved couplings and fittings. All threads shall be painted with an approved rust inhibiting and sealing compound before make-up.

F. Conduit shall be pitched to drain to outlet boxes, pull boxes; or otherwise installed to avoid trapping moisture. All conduit shall be suitably capped or plugged during construction to prevent the entrance of water.

1052.02 Wire and Cables :Installation

A. Each wire must be continuous without weld, splice, or joint throughout the length and it shall be uniform in cross section, new, unused, and free from flaws, scales, and other imperfections. All wiring shall comply with UL standards and shall bear its stamp of approval for size, type, and voltage rating.

B. No wire smaller than No. 12 AWG shall be used for power wiring. All wire shall be stranded. Control wire shall be No. 16 AWG. All control wire shall be stranded.

C. Branch circuit joints or splices shall be made electrically and mechanically secure with pressure connectors and nylon insulators. Twist-on connectors shall not be utilized. Connectors normally furnished with switchgear, motor starters, panels, etc., may be used for feeder terminations if they are compatible with the conductor. Other feeder connectors shall be bolted, wedge type or compression type designed specifically for the purpose or terminal strips.

D. Perform a D.C. meg test on all feeder conductors size 2 AWG and larger using a 1000 volt 'megger'. Use a 500 volt 'megger' on all other feeders.

1052.03 Boxes and Fittings: Installation

All junction boxes, pull boxes, and outlet boxes shall be installed and sized according to the NEC with fasteners suitable for the installation intended. Outlet boxes shall contain the proper knockouts with all unused knockouts intended. Outlet boxes shall contain the proper knockouts remaining closed. Outlet or utility boxes concealed in construction shall be firmly secured in place, set true, square and flush with the finished surface for the correct application of cover plates or other devices.

1052.04 Circuit Breakers: Installation

All circuit breakers shall be capable of accepting copper, aluminum, or copper clad aluminum wiring. Furnish lugs which are constructed for the number and size of conductors which will be installed.

Mount circuit breakers in panelboards of control panels in accordance with the manufacturer's recommendations. Securely fasten bolt-on circuit breakers to assure positive connection to the panelboard bussing. Where main circuit breakers are installed, mount the circuit breaker upright in the panel top-center.

1052.05 Ground Rod: Installation

All ground rods and lugs shall be capable of accepting a bare copper wiring sized for the panel.

TRAFFIC CONTROL
SECTION 1100

1110 Barricades, Signs and Traffic Handling

1111 General Description

This item shall consist of providing, installing, moving, replacing, maintaining, cleaning and removing temporary or permanent street closure barricades, signs or other devices required to handle the traffic in conformance with the current edition of the Texas Manual of Uniform Traffic Control Devices for Street and Highways and as indicated or directed by the City Engineer.

1112 Construction Methods

Prior to commencing construction, suitable "Barricades, Signs and Traffic Handling" devices shall be installed to protect the workers and the public.

The Contractor shall be responsible for installing all markers, signs and barricades conforming to the Manual on Uniform Traffic Control Devices and/or as indicated. If, in the opinion of the City Engineer, additional markers, signs or barricades are needed in the interest of safety, the Contractor will install such as are required or as directed by the Engineer.

1112 Maintenance

It shall be the Contractor's responsibility to maintain, clean, move and replace if necessary, barricades, signs and traffic handling devices during the time required for construction of the project. Permanent barricades shall be constructed as required after the completion of the street by drilling holes to place the posts and concrete foundations. Foundation concrete shall be cured before the rails are attached. When no longer needed all temporary Barricades, Signs and Traffic Handling Devices shall be removed and the area restored to its original condition or as directed by the City Engineer.

1113 Measurement

This item will be measured by the unit of measure “month” as indicated on the plans.

1114 Payment

The work performed and materials furnished in accordance with this item and measured as provided under “Measurement” will be paid for at the unit price bid

for "Barricades, Signs and Traffic Handling". The price shall be full compensation for furnishing all labor, materials, supplies, equipment and incidentals necessary to complete the work as specified.

Payment will be made on the following basis:

A. Payment for this Item will begin on the first payable monthly construction estimate after barricades, signs and traffic handling devices have been installed in accordance with the TCP and construction has begun

B. Monthly payment will be made each succeeding month for this Item provided the barricades, signs and traffic handling devices have been installed and maintained in accordance with the TCP until the contract amount for Barricades, Signs and Traffic Handling has been paid.

C. An overrun of the plan quantity for this Item will not be allowed.

D. If the contract is completed prior to payment of the amount allowed, the balance due will be paid on the next monthly estimate cycle.

E. If the Contractor fails, within the time frame established by the Engineer, to provide or properly maintain signs and barricades in compliance with the contract requirements, as determined by the Engineer, the Contractor will be considered in non-compliance with this Item and no payment will be made for this Item for the month(s) in question.

1120 Markings

1121 Work Zone Pavement Markings

1121.01 Description
This item shall govern the placement and maintenance of work zone pavement markings of the colors, types and sizes indicated on the Drawings.

1121.02 General
Work zone pavement markings shall consist of guide marks, short-term markings and/or standard pavement markings. All streets, which are to be opened to traffic, shall be marked with short-term markings or standard markings, as shown on the Drawings, at the end of each day of operation.

When inclement weather prohibits the application of short-term markings or standard markings indicated on the Drawings, guide marks may be

considered as temporary short-term markings for asphaltic surfaces, upon approval by the Engineer. The placement of pavement markings as shown on the Drawings may be delayed until the time that weather conditions allow the application of pavement markings.

1121.03 Materials

All non-removable markings shall be thermoplastic, unless otherwise indicated on the Drawings. Thermoplastic markings shall have a thickness of 90 miles unless indicated otherwise on the Drawings. All non-removable work zone markings shall conform to the requirements of Specification Item 871S, "Reflectorized Pavement Markings", except for performance period, measurement and period.

Unless otherwise shown on the Drawings or indicated in the Contract Documents, the materials used for the work zone pavement markings shall be thermoplastic, paint and beads, raised pavement markers, prefabricated pavement marking material, temporary flexible-reflective street marker tabs mother materials approved by the Engineer.

Thermoplastic or paint and beads applications shall not be used for removable markings.

Unless otherwise shown on the Drawings or indicated in the Contract Documents:

The Contractor shall have the option to use raised pavement markers to simulate standard markers in accordance with the Drawings. Longitudinal lines wider than four (4) inches may be simulated by the side-by-side placement of markers to increase the apparent line width in multiples of four (4) inches.

Removable work zone pavement markings on final pavement surfaces shall be removable tape conforming to TX DOT Departmental Materials Specification DMS8241.

When raised reflective pavement markers are required on the Drawings to supplement the removable pavement markings, a marker shall be applied to the top of the tape at the approximate mid-length of tape used for broken lines and at approximate 20-foot spacing for solid lines.

Raised pavement markers will not be allowed for words, symbols, shapes and diagonal or transverse lines.

The paint shall be water-based and shall conform to Standard Specification Item 860S, "Pavement Marking Paint".

The beads shall conform to Standard Specification Item 860S, "Pavement Marking Paint".

The thermoplastic type materials shall conform to TxDOT Departmental Materials Specification Item DMS-8220, "Thermoplastic Pavement Markings".

1121.04 Performance Requirements
The markings in construction areas shall remain in proper alignment and shall be distinctly visible when dry from a minimum distance of 300 feet in daylight hours and distinctly visible from a minimum distance of 120 feet at night, when illuminated by automobile low-beam headlights. The visibility distances will be determined when viewed from an automobile traveling on the street.

The daytime color and the nighttime reflected color of the markings shall be distinctly white or yellow as shown on the Drawings. The markings shall exhibit uniform retroflective characteristics.

1121.05 Maintenance of Markings
The Contractor shall be responsible for maintaining all work zone pavement markings for 30 calendar days after installation. Pavement markings, that fail to meet the requirements of this specification for 30 calendar days from the date of installation, shall be removed and replaced by the Contractor at the Contractor's expense. The 30-calendar maintenance requirement will be required for replaced markings from the time the original markings were installed.

1121.06 Construction Methods

(1) Placement and Maintenance.
The Contractor shall exercise due diligence in the election of materials and placement of work zone pavement markings. The Contractor at its own expense shall maintain work zone pavement markings to the satisfaction of the Engineer or designated representative in. accordance with this Specification Item.

Unless approved otherwise in writing by the Engineer or designated representative, all Portland cement concrete surfaces shall have standard markings in place prior to opening to traffic.

All asphaltic Surfaces, which are scheduled for opening, to traffic, shall be marked with guidemarks immediately following placement and final rolling of any course. Guidemarks shall consist of a single temporary flexible-reflective street marker tab or a single temporary construction raised reflective pavement marker at 20-foot spacing.

Guidemarks shall be placed in proper alignment with the final location of future standard markings. Any guidemarks, which are not in alignment with standard markings, shall be removed by the Contractor at its own expense.

The standard pavement markings shall be installed in accordance with the TxDOT Manual on Uniform Traffic Control Devices for Streets and Highways (TMUTCD) and as shown on the Drawings.

Surfaces to receive surface treatments shall be marked in accordance with the Drawings. Unless otherwise shown on the Drawings, the standard pavement markings shall be placed in accordance with TMUTCD, no sooner than three (3) days nor later than two (2) weeks after the placement of the surface treatment.

Short- term markings required by the, Drawings shall conform to the TMUTCD and details shown on the Drawings. Unless otherwise shown on the Drawings, short-term markings shall be removed immediately prior to placement of the final pavement markings.

(2) Marking Removal.

Any work zone pavement markings placed by the Contractor that conflict with any succeeding work zone markings shall be removed by the Contractor at -its own expense in accordance with Specification Item 874S, "Eliminating Existing Pavement Markings and Markers", except for measurement and payment.

Removable marking materials shall leave minimal evidence of the existence of the marking upon removal.

1121.07 Measurement

This Standard Specification Item will be measured by the lineal foot of standard marking or short-term marking, by each guidemark, by each word, shape or symbol, by each temporary flexible-reflective street marker tab on surface treatments or by any other unit as shown on the Drawings. Raised pavement markers used to simulate a stripe will be measured by the lineal foot of simulated stripe or each raised pavement marker as

shown on the Drawings. Where double stripes are placed, each stripe will be measured separately.

This is a Drawings quantity measurement Item and the quantity to be paid for will be that quantity shown on the Bid Form Section 0030OU of the Contract Documents, except when an adjustment of quantities is merited. If no adjustment of quantities is required, additional measurements or calculations will not be required. However, if the measured quantities vary from those shown on the Drawings and on the "Bid Form" by more than five (5) percent (or as stipulated under the measurement article for the Item), either party to the Contract may request a Change Order, in writing, for an adjustment of the quantities by each separate bid item, except that when stated in the particular item, the adjustment will be made based upon a designated element shown in the Item.

The party to the Contract which requests the Change Order shall present, to the other, one copy of field measurements and calculations showing the revised quantities in question. These revised quantities, when approved by the Engineer, together with all other quantities tinder the same bid item, shall constitute the final quantity for which payment will be made.

When quantities are revised by a change in design, the "Plan Quantity" will be increased or decreased by the amount involved in the design change.

Payment for revised quantities will be -paid for at the unit price bid for that bid item.

1121.08 Payment

The work performed and materials furnished in accordance with this Standard Specification Item and measured as provided under "Measurement" will be paid for at the Unit bid price for "Work Zone Pavement Markings (Removable)", "Work Zone Pavement Markings (Non-removable)", "Work Zone Pavement Markings (Short-Term)" and "Work Zone Pavement Markings (Guidemark)" of the width, color and type shown on the Drawings. This price shall include full compensation for furnishing all materials,

labor, tools, equipment and incidentals necessary to place, maintain and remove, when required, the markings, except as described below.

Removal of existing markings will be paid for under Specification Item 874S, "Eliminating Existing Pavement Markings and Markers".

Final work zone pavement markings (paint and beads) which will be used within 30 calendar days after application as a sealer for Type I pavement markings will not be paid for under this Specification Item, but will be paid for under Specification Item 871 S, "Reflectorized Pavement Markings"

1122 Barricades, Signs and Traffic Handling

1122.01 Description

This item shall consist of providing, installing, moving, replacing, maintaining, cleaning and removing temporary or permanent street closure barricades, signs or other devices required to handle the traffic in conformance with the current edition of the Texas Manual of Uniform Traffic Control Devices for Street and Highways and as indicated or directed by the City Engineer.

1122.02 Construction Methods

Prior to commencing construction, suitable "Barricades, Signs and Traffic Handling" devices shall be installed to protect the workers and the public.
The Contractor shall be responsible for installing all markers, signs and barricades conforming to the Manual on Uniform Traffic Control Devices and/or as indicated. If, in the opinion of the City Engineer, additional markers, signs or barricades are needed in the interest of safety, the Contractor will install such as are required or as directed by the Engineer.

1122.03 Maintenance

It shall be the Contractor's responsibility to maintain, clean, move and replace if necessary, barricades, signs and traffic handling devices during the time required for construction of the project. Permanent barricades shall be constructed as required after the completion of the street by drilling holes to place the posts and concrete foundations. Foundation concrete shall be cured before the rails are attached. When no longer needed all temporary Barricades, Signs and Traffic Handling Devices shall be removed and the area restored to its original condition or as directed by the City Engineer.

1122.04 Measurement

The work performed and the materials furnished by this item as indicated, except for barricades, will not be measured for payment but will be considered subsidiary to the work.

1122.06 Payment

The work performed and material furnished as prescribed by this item will be paid for at the unit price bid for "Barricades" or “Traffic Control” per the unit specified in the bid items.

1130 Traffic Signs

1130.01 Description

This item shall govern furnishing and placement of Traffic Signs including excavation and backfill, p.c. concrete, reinforcement, posts, hardware and signs. Regulatory signs within the public street will be installed and maintained by the City of Kerrville. Traffic Signs within a gated community shall conform to this section and the TxDOT - Texas Manual on Uniform Traffic Control Devices. The placement of regulatory signs within the gated community is the responsibility of the Engineer on Record for the project. Installation and maintenance of signs within a gated community is the responsibility of the owner.

1130.02 Submittals

The submittal requirements of this specification include:

A. Identification of the types of materials proposed for traffic sign, i.e. faces, posts, clamps, etc.,

B. Construction details (p.c. concrete mix, reinforcing steel, etc.) for p.c. foundation,

C. Conformance to TxDOT or ASTM Specifications.

113 0.03 Construction Methods

Any excavation required for the sign installation shall be constructed using the Standard Specifications. Sign posts, are not to be imbedded in drilled shaft foundations. The signpost shall be screwed into a NPT nipple embedded into the concrete foundation.

Electrical conduit, where required, and anchor bolts of the size, length and number as indicated on the Drawings, shall be positioned before the Portland cement concrete is placed. Anchor bolt groups shall be set and maintained in position with a template during the placement of that portion of Portland cement concrete where anchor bolts are embedded. Care shall be taken to obtain the orientation of the anchor bolts and spacing of the anchor bolt groups as indicated on the Drawings.

1140 Pavement Marking

1141 Reflectorized Paint

1141.01 Description

This item shall govern the installation of reflectorized paint pavement marking. The width of the line shall be 4 inches and the color as indicated on the Drawings.

1141.02 Submittals

The submittal requirements of this specification item include:

A. Proposed paint color(s), brand names, raw materials and products for
Traffic paint.

B. Sampling and testing procedures and specific test results for pigment,
calcium carbonate, acrylic resins and other materials used in the traffic paints.

C. Proposed shipping requirements including container type(s) (drums and/or buckets), and labeling.

D. Manufacturer's recommendations for mixing, storage and application of
the traffic glass beads and traffic paint.

E. All applicable Materials Safety data Sheets for the traffic paint.

1141.03 Construction Methods

The Contractor shall use a crew, that is experienced in the work of installing pavement markings and in the necessary traffic control for such operations on the roadway surface, and shall supply all the equipment, personnel, traffic control and materials necessary for the placement of the pavement markings as indicated on the Drawings or directed by the Engineer or designated representative. All work shall conform to the current edition of the Texas Manual of Uniform Traffic Control Devices (TMUTCD).

1141.04 Measurement

Work for Pavement Marking Paint lines will be measured by the lineal foot of the various widths. Work for pavement marking, paint letter or figures will be measured by the square foot.

1141.05 Payment

Work performed as prescribed by this item, measured as provided under "Measurement", shall be paid for at the unit bid price for "Pavement Marking Paint" per lineal foot or square foot or lump sum of the various widths specified. This price shall include full compensation for furnishing

all labor, tools, equipment, materials and incidentals necessary to complete the work specified.

1142 Reflectorized Pavement Markings

1142.01 Description
This item shall govern furnishing and placement of reflectorized pavement markings of the colors, types, shapes, sizes, widths and thickness indicated on the Drawings.

1142.02 Materials
(1) Type I Marking Material.

Type I markings are thermoplastic type materials that require heating to elevated temperatures for application. Type I marking materials shall conform to TxDOT Departmental Materials Specification Item DMS-8220, "Thermoplastic Pavement Markings". Each container of Type I Marking Material shall be clearly marked to indicate the color, weight (mass), type of material, manufacturer's name and lot/batch number.

(2) Type II Marking Material.

Type II markings are paint- type materials that are applied at ambient temperature or slightly elevated temperatures. Type H marking materials shall conform to Specification Item No. 860S, "Pavement Marking Paint".
1142.03 Construction Methods

1142.03 Construction Method
(1) General.

When required by the Engineer, the Contractor and the Engineer shall review the sequence of Work to be followed and the estimated progress schedule.

Markings may be placed on streets either free of traffic or open to traffic. On streets already open to traffic, the markings shall be placed under traffic conditions that exist with a minimum interference to the operation of the facility. Traffic control shall be as shown on the Drawings or as approved in writing by the Engineer or designated representative. All markings placed under open-traffic conditions shall be protected from traffic damage and disfigurement. On streets open to traffic with 3 lanes of travel in one direction, all markings shall be placed from the outside lanes

only, unless otherwise approved in writing by the Engineer or designated representative.

Guides to mark the lateral location of pavement markings shall be established as shown on the Drawings or as directed by the Engineer or designated representative. The Contractor shall establish the pavement marking guide and the Engineer or designated representative will verify the location of the guides.

Markings shall be placed in proper alignment with the guides. The deviation rate in alignment shall not exceed I inch per 200 feet of street. The maximum deviation shall not exceed 2 inches nor shall any deviation be abrupt.

Markings shall essentially have a uniform cross-section. The density and quality of markings shall be uniform throughout their thickness. The applied markings shall
have no more than Five (5) percent, by area, of holes or voids and shall be free of blisters.

Markings, in place on the street, shall be reflectorized both internally and externally. Glass beads shall be applied to the materials at a uniform rate sufficient to achieve uniform and distinctive retroflective characteristics when observed in. accordance with TxDOT Test Method Tex-828-13.

Contractor personnel shall be sufficiently skilled in the Work of installing pavement markings.

Markings placed that are not in alignment or sequence, as shown on the drawings or as stated in the Standard Specification Item, shall be removed by the Contractor at its expense. Removal shall be in accordance with Specification Item 874S, "Eliminating Existing Pavement Markings and Markers", except for measurement and payment, Guides placed on the street for alignment purposes shall not establish a permanent marking on the street.

Unless otherwise shown on the Drawings, pavement markings may be applied by any method that will yield markings meeting the requirements of the Specification Item.

(2) Surface Preparation
New Portland cement concrete surfaces shall be cleaned in accordance with Specification Item 875S, "Pavement Surface Preparation for

Markings" to remove curing membrane, dirt, grease, loose and/or flaking existing construction markings and other forms of contamination.

Older Portland cement concrete surfaces and asphaltic surfaces that exhibit loose and/or flaking existing markings shall be cleaned in accordance with Specification Item 875S, "Pavement Surface Preparation for Markings" to remove all loose and flaking markings.

Pavement to which material is to be applied shall be completely dry. Pavements shall be considered dry if, on a sunny day after observation for 15 minutes, no condensation occurs in the underside of a I foot square piece of clear plastic that has been placed on the pavement and weighted on the edges.

(3) Application of Type I Markings.

New Portland cement concrete surfaces shall be further prepared for Type I markings, after cleaning, by placing a Type H marking as a sealer in accordance with the Specification Item. When placing Type I markings in new locations on asphaltic surfaces 3 years old or older or any Portland cement concrete surfaces, a Type 11 marking shall be used as a sealer. Unless otherwise shown on the Drawings, existing Portland cement concrete and asphaltic surfaces to be restriped will not require Type 11 markings as a sealer; existing markings may be used as a sealer in lieu of Type 11 markings. Type H markings shall be placed a minimum of 2 and, a maximum of 30 calendar days in advance of placing Type I markings. Type I markings which become dirty due to inclement weather or street conditions shall be cleaned by washing, brushing, compressed air or other means approved by the Engineer, prior to application of Type I markings. If Washing is used, the surface of Type 11 markings shall become thoroughly dry before placing Type I markings. Color, location and configuration of Type 11 markings shall be the same as that of Type I markings.

Type I pavement marking material shall be applied within temperature limits recommended by the material manufacturer. Application of Type I pavement markings shall be done only on clean, dry pavement having a surface temperature above 50°F (10°C). Pavement temperature shall be measured in accordance with TxDOT Test Method Tex-829-B.

When Type I pavement marking application is by spray, and operations cease for 5 minutes or more, the spray head shall be flushed by spraying pavement marking material into a pan or similar container until the

pavement marking material being sprayed is at the proper temperature for application.

Unless otherwise directed by the Engineer in writing, Type I pavement,marking materials shall not be placed on streets between September 30 and March 1, subject to temperature and moisture limitations specified herein.

Unless otherwise shown on the Drawings, the minimum thickness of Type I marking shall be 0.060 inches for edgeline markings and 0.090 inches for stop-bars, legends, symbols, gore and center-line/no-passing barrier-line markings, when measured in accordance with TxDOT Test Method Tex-854-B. The maximum thickness of all Type I markings shall be 0.180 inches.

The thickness of Type I markings at the time of placement will, be measured above the plane formed by the pavement surface. The Engineer will supply a device to measure the thickness of the applied markings. The markings shall be of uniform thickness throughout their lengths and widths.

(4) Application of Type 11 Markings
The application of Type H marking materials shall be done only on surfaces with a minimum surface temperature of 50°F (10°C).

The application rate for Type 11 marking material shall be between 15 and 20 gallons per mile of solid 4 inch line and between 30 and 40 gallons per mile of solid 8 inch line. For new surface treatment projects the application rate shall be between 25 and 30 gallons per mile of solid four (4) inch, line and between 40 and 50 gallons per mile of solid 8 inch line.

Pavement markings for new surface treatment projects shall be applied in two applications, each approximately one-half the application rate. The first application shall not contain glass beads. The interval between the first and second application shall be a minimum of 1 hour.

When, in the case of impending inclement weather, the Engineer or designated representative directs the Contractor to apply water-based traffic paint and the markings are subsequently damaged by rain, sleet, hail, etc., the Contractor will be paid for the initial placement and the replacement markings. However, if the Contractor places the markings at his option, the Contractor is responsible for all costs associated with the replacement markings.

1142.04 Measurement

This Specification Item will be measured by the lineal foot by each of the various words, shapes or symbols, or by any other unit as shown on the Drawings.

Where double stripes are placed, each stripe will be measured separately.

This is a Drawings quantity measurement Item and the quantity to be paid for will be that quantity shown on Bid Form Section of the Contract Documents, except when an adjustment of quantities is merited. If no adjustment of quantities is required, additional measurements or calculations will not be required. On the other hand if the measured quantities vary from those shown on the Drawings and on the "Bid Form", by more than five (5) percent (or as stipulated under the measurement article for the Item), either party to the Contract may request a Change Order, in writing, for an adjustment of the quantities by each separate bid item, except that when stated in the particular item, the adjustment will be made based upon a designated element shown in the Item.

The party to the Contract which requests the Change Order shall present, to the other, one copy of field measurements and calculations showing the revised quantities in question. These revised quantities, when approved by the Engineer or designated representative, together with all other quantities under the same bid item, shall constitute the final quantity for which payment will be made.

When quantities are revised by a change in design, the "Plan Quantity" will be increased or decreased by the amount involved in the design change. Payment for revised quantities will be paid for at the unit price bid for that bid item.

Type II pavement markings requiring 2 applications on new surface treatments (Specification Item No.320S) will be measured as 1 marking.

Type II pavement marking materials, when used as a sealer for Type I markings will be measured as Type H markings.

1142.05 Payment

The work performed and materials furnished in accordance with this Standard Specification Item and measured as provided under "Measurement" will be paid for at the Unit bid price for "Reflectorized Pavement Markings" of the various types, colors, shapes, sizes, widths and thickness (Type I markings only) specified. This price shall include full compensation for furnishing all materials; for application of pavement

markings; and for all other labor, tools, equipment and incidentals necessary to complete the Work, except as described below.

1143 Temporary Removable Pavement Markings

1143.01 Description

This item shall govern furnishing, placement and removal of prefabricated removable pavement markings of the types, colors, shapes and sizes indicated on the Drawings or as directed by the Engineer or designated representative.

1143.02 Submittals

The submittal requirements of this specification item include:

A. List of temporary, removable, pavement markings, shapes, words, etc.
with associated manufacturer.

B. Manufacturer's recommended preparation, cleaning, placement and installation instructions.

C. Type of adhesive and application recommendations.

1143.03 Construction Methods

A. General

Guides to mark the lateral location of pavement markings shall be established as indicated on the Drawings or as directed by the Engineer or designated representative. The Contractor shall establish the pavement marking guides and the Engineer or designated representative will verify the location of the guides prior to installation of final striping.

The pavement markings shall be placed in proper alignment with the guides. The deviation rate in alignment shall not exceed one (1) inch per 200 feet of roadway. The maximum deviation shall not exceed two (2) inches nor shall any deviation be abrupt.

B. Dimensions

Markings shall be in accordance with the color, length, width, shape and configuration indicated on the Drawings. The alignment and location shall be as indicated on the Drawings or as directed in writing by the Engineer or designated representative.

C. Methods

All material placement shall be in accordance with the material manufacturer's instructions, unless otherwise directed in writing by the

Engineer or designated representative. In addition to the manufacturer's instructions, material placement shall be in accordance with surface condition, moisture and temperature requirements specified within this item.

D. Surface Preparation
Surface preparation shall be accomplished by any cleaning method, approved by the Engineer or designated representative, that effectively removes contaminants and loose materials and corrects existing conditions considered deleterious to proper adhesion. Surface preparation utilizing blast cleaning will only be required if indicated on the Drawings.

Surfaces shall be further prepared after cleaning by scaling or priming, as recommended by the manufacturer of the temporary pavement marking materials or as directed in writing, by the Engineer or designated representative.

E. Moisture
The pavement surface on which the marking material is to be placed shall be completely dry. A pavement shall be considered dry, if on a sunny day after observation for 15 minutes, condensation does not develop on the underside of a one (1) foot square piece of clear plastic, which has been placed on the pavement and weighted down on the edges.

G. Temperature
The pavement and ambient air temperature requirements, which are recommended by the material manufacturer, shall be followed. If no temperature requirements are established by the material manufacturer, the material shall not be placed if the pavement surface temperature is below 50°F or above 130°F.

1143.06 Performance Requirements

A. Adhesion
Installed pavement markings shall not lift, shift, smear, spread, flow or tear by traffic action.

B. Appearance
Pavement markings shall present a neat, uniform appearance, free of excessive adhesive, ragged edges and irregular lines or contours.

C. Visibility
Installed pavement markings shall have uniform and distinctive retroreflectance.

1143.07 Measurement
Measurement of the markings shall be made for each color by the lineal foot of the various widths; by each for word(s), shape or symbol or by any other unit as indicated on the Drawings, complete in place.

1143.08 Payment
The work performed and materials furnished as prescribed by this item and measured as provided under "Measurement," will be paid for at the unit bid price for "Temporary Removable Pavement Markings" of the various types, colors, shapes and sizes indicated on the Drawings. This price shall include full compensation for: cleaning the pavement surface by any suitable means other than blast cleaning; for furnishing, placing and removal of all materials; and for all labor, tools, equipment and incidentals necessary to complete the work.

1144 Reflectorized Pavement Markers

1144.01 Description
This item governs reflectorized pavement markers to be used to delineate traffic lanes or fire hydrants.

1144.02 Submittals
The submittal requirements of this specification item include:

A. List of specific application(s) [i.e. type: (reflectorized Type I-A, I-C or II-A-A,
IIB-B or II-C-R)] and applicable epoxy system and adhesive types [867S.5].

B. Specific manufacturer with test results and technical specifications for proposed pavement markers.

C. Manufacturer's recommendations for surface preparation, cleaning, placement temperatures and installation instructions.

D. Adhesive components and mixing recommendations.

1144.03 Materials

A. Design and Shape
The outer surface of the marker shall be smooth and all corners and edges exposed to traffic must be rounded. The base of the marker shall have a width of 4.0 inches + 1/2 inch and shall have a minimum area exposed to

traffic of 12.5 square inches. The maximum height shall be ' 3/4 inch. The maximum slope of the reflector face or faces shall be not more than 30 degrees from the horizontal.

The bottom surface of the markers shall be of a design for adhesion with epoxy adhesives.

B. Pavement Marker Types

Pavement markers shall be of the following types:

1 . Type I-A shall contain an approach face that reflects amber light. The body, other than the reflective face, shall be yellow.

2. Type I-C shall contain an approach face that reflects white light. The body, other than the reflective face, shall be white, silver white or light gray.

3. Type II-A-A, shall contain two reflective faces (approach and trailing), each of which shall reflect amber light. The body, other than the reflective faces, shall be yellow.

4. Type H-B-B shall contain two reflective faces (approach and trailing) with glass covered pneumatic reflective faces, each of which shall reflect blue light. The body, other than the reflective faces, shall be blue. Blue markers' color will conform to Fire Department requirements.
5. Type H-C-R shall contain two reflective faces (approach and trailing), one of which reflects white light and one of which reflects red light. The body, other than the reflective faces, shall be either white, silver white or light gray or one-half white, silver white or light gray on the side that reflects white light and one-half red on the side that reflects red light
The reflective faces of the Type II markers shall be located so that the direction from one face shall be directly opposite the direction of reflections of the other face.

1144.04 Construction Methods

The Contractor shall use a crew experienced in the work of Installing reflectorized pavement markers and in the necessary traffic control for such operations on the roadway surface and shall supply all the equipment, personnel, traffic control and materials necessary for the placement of the pavement markings as indicated on the Drawings or as directed by the Engineer or designated representative. All work shall conform to the

current edition of the Texas Manual of Uniform Traffic Control Devices (TMUTCD).

All reflectorized pavement markers shall be from the same manufacturer. Surfaces to which markers are to be attached by an adhesive shall be prepared by any method approved by the Engineer or designated representative to ensure that the surface is free of dirt, curing compound, grease, oil, moisture, loose or unsound pavement markings and any other material which would adversely affect the adhesive bond. Unless indicated otherwise on the Drawings, surface preparation for installation of raised reflectorized pavement markers will not be paid for directly, but shall be considered subsidiary to this specification item.

Guides to mark the lateral location of pavement markings shall be established as indicated
on the Drawings or as directed by the Engineer or designated representative. The Contractor will establish the pavement marking guides and the Engineer or designated representative will verify the location of the guides prior to final installation.

The pavement markers shall be placed in proper alignment with the Guides. The deviation rate in alignment shall not exceed 1 inch per 200 feet of roadway. The maximum deviation shall not exceed 2 inches nor shall any deviation be abrupt.

Markers placed which are not in alignment indicated on the Drawings shall be removed by the Contractor at the Contractor's expense. Guides placed on the roadway for alignment purposes shall not establish a permanent marking on the roadway.

The Reflectorized Pavement Markers shall be applied using an approved epoxy adhesive to the lines and spacings as indicated on the Drawings or as directed by the Engineer or designated representative. The adhesive shall be applied in sufficient quantity to ensure that 100 percent of the bonding area of the pavement markers shall be in contact with the adhesive. The adhesive shall be applied in accordance with the manufacturer's recommendations.

Pavement markers shall be placed immediately after the adhesive is applied and shall be firmly bonded to the pavement. Adhesive or any other material that impairs functional reflectivity will not be acceptable.

When deemed necessary by the Engineer or designated representative, the Contractor, at his expense, shall place any additional pilot markings

required to facilitate the placement of the permanent markings in the alignment specified. Any and all additional markings placed on the roadway for alignment purposes shall be temporary in nature and shall not establish a permanent marking on the roadway. Materials used for pilot markings and equipment used to place such markings shall be approved by the Engineer or designated representative.

1144.05 - Measurement
Reflectorized Pavement Marker will be measured as per each, complete in place.

1144.06 Payment
Payment will be made at the unit bid price per each or lump sum, see bid items. The price shall include full compensation for all work performed and all materials furnished in constructing, transporting and placing the markers.

1145 Non-Reflectorized Traffic Buttons

1145.01 Description
This item shall govern furnishing of "Non-Reflectorized Traffic Buttons" complete in place in conformity with details indicated on, the Drawings.

1145.02 Submittals

The submittal requirements of this specification item include:

A. Specific applications and color of traffic buttons.

B. Specific manufacturer with test results and technical specifications for proposed traffic buttons.

C. Manufacturer's recommendations for surface preparation, cleaning, placement temperatures and installation instructions.

D. Applicable epoxy system and adhesive types [867S.5], adhesive components and mixing recommendations.

1145.03 Materials

The outer surface of the button shall be round and dome-shaped with a uniform curvature. The topsides of the buttons shall be smooth and free from surface irregularities, pits, cracks, checks, chipping, discoloration and any other defects, which adversely affect appearance and application.

The bottom surface of the markers shall be of a design for adhesion with epoxy adhesives and shall be rough textured, free from gloss, glaze or any other substance that may reduce its bond to the adhesive. The buttons shall be made of a ceramic material meeting the following specifications:

1145.04 Construction Method

The Contractor shall use a crew experienced in the work of installing traffic buttons and in the necessary traffic control for such operations on the roadway surface and shall supply all the -'equipment, personnel, traffic control and materials necessary for the placement of the traffic buttons as indicated on the Drawings or as directed by the Engineer or designated representative. All work shall conform to the current edition of the Texas Manual of Uniform Traffic Control Devices (MUTCD), The City of Austin Transportation Criteria Manual and Standard Detail 865S-1.

The traffic buttons shall be placed in accordance with the Drawings or as directed by the Engineer or designated representative. The portion of the highway surface to which the button is attached by the adhesive shall be prepared by any method approved by the Engineer or designated representative in order to be free of dirt, curing compound, grease, oil, moisture, loose or unsound pavement and any other material which would adversely affect the bond of the adhesive. The wet epoxy shall be applied in sufficient quantity so as to insure the following:

A. 100 percent of the bonding area of the button shall be in contact with epoxy.

B. The button itself shall not contact the pavement but shall sit on the epoxy "cushion".

C. When the button is pressed onto the pavement, adhesive shall be forced out around its entire perimeter.

Unless indicated otherwise on the Drawings, the epoxy adhesive shall be machine mixed and applied in accordance with the manufacturer's recommendations.

Any excess adhesive or other foreign material on or in front of the reflective face(s) of the button shall be removed so that reflectivity will not be impaired.

When the project is complete, the button shall be firmly bonded to the pavement, lines formed by the buttons shall be true and the entire

installation shall present a neat appearance. Any individual button placed that does not conform to the requirements of this specification and/or plans shall be removed and replaced with buttons conforming to these requirements at the
Contractor's expense.

1145.05 Measurement

Non-Reflectorized Traffic Buttons will be measured per each, complete in place.

1145.06 Payment
Payment will be made at the unit bid price per each traffic button of the color and material specified or lump sum, see bid items. The price shall include full compensation for all work performed and all materials furnished in constructing, transporting and placing the buttons.

1146 Abbreviated Pavement Markings
1146.01 Description
This item shall govern the placement, maintenance and removal of temporary abbreviated markings, which are to be placed on all roadways, that are open to traffic and that do not have standard markings in place.

1146-02 Submittals

The submittal requirements of this specification item include:

A. Specific applications and color of traffic markings.

B. Specific manufacturer with test results and technical specifications.

C. Manufacturer's recommendations for surface preparation, cleaning, placement temperatures and installation instructions. -

1146.03 Materials
The pavement-marking material shall consist of an adhesive-backed reflective tape, which can be applied to the pavement. Markings shall be of good appearance, have straight, unbroken edges and have a color that complies with all federal regulations.

A. Color
The markings, as well as retroreflected light from the markings, shall be white or yellow as indicated on the Drawings or provided in writing by the Engineer or designated representative.

B. Visibility

The pavement markings (during daylight hours) shall be distinctively visible for a minimum of 300 feet unless sight distance is restricted by geometric roadway features.

The pavement markings (when illuminated by automobile low beam headlights at night) shall be distinctively visible for a minimum of 160 feet unless sight distance is restricted by geometric roadway features.

The day and night visibility requirements, which are specified above, shall be met when viewed from an automobile traveling on the roadway.

1146.04 Construction Methods

The Contractor shall use a crew experienced in the work of installing pavement markings and in the necessary traffic control for such operations on the roadway surface and shall supply all the equipment, personnel, traffic control and materials necessary for the placement of the pavement markings as indicated on the Drawings or as directed by the Engineer or designated representative. All work shall conform to the current edition of the Texas Manual of Uniform
Traffic Control Devices (MUTCD).

Abbreviated markings, which meet all specification requirements, shall be in place on all roadways on which traffic is allowed and where suitable standard pavement marking is not in place. The transverse location of the line(s) formed by the markings shall be as indicated on the Drawings or determined by the Engineer or designated representative.

Unless otherwise indicated, the abbreviated makings shall be placed as follows:

Condition	Spacing	Length of Stripe
Straight	20 feet approximately	24 inch
Curve greater than 2 degrees	20 feet maximum	24 inch
Curve less than or equal 2 degrees	10 feet	24 inch

Pavement markings shall be a minimum of 3 7/8 inches wide. Lengths and spacings will be in accordance with these specifications.

The spacing of stripes may be modified by the Engineer or designated representative. However, the maximum spacing specified above shall not be exceeded in any case.

The Contractor will be responsible for maintaining the abbreviated pavement markings until standard pavement markings are in place.

Abbreviated pavement markings shall be removed after all permanent markings have been placed.

1147 Jiggle Bar Tile

1147.01 Description
This item shall govern. the materials, composition, quality, sampling and testing of jiggle bar tile of either ceramic or plastic resin body construction, reflectorized or nonreflectorized types as described herein,

1147.02 Submittals
The submittal requirements of this specification item include:

A. List of specific application(s) [i.e. designation and type: (reflectorized Type IA, I-C or R-A-A; nonreflectorized-Type W or Y)] and applicable epoxy system and adhesive types [Standard Specification,Item Section 867S.5].

B . Specific manufacturer with test results and technical specifications for proposed jiggle bar tile

C . Manufacturer's recommendations for surface preparation, cleaning, placement
temperture and instructions.

D.Adhesive components and mixing recommendations.

1147.03 Materials

Jiggle bar tiles shall be either ceramic body or plastic resin body construction and shall be either reflectorized or nonreflectorized as indicated on the Drawings. Jiggle bar tiles furnished for any one project shall be of the same material and manufacturer, The Jiggle Bar Tile shall comply with TxDoT Departmental Materials Specifications DMS-41 00,

A. Types of Jiggle Bar Tile

1. Reflectorized jiggle bar tiles shall be of the following types:

(a) Type I-A shall contain an approach face that reflects amber light and the body other than the reflective face shall be yellow.

(b) Type I-C shall contain an approach face that reflects white light. The body, other than the reflective face, shall be white.

(c) Type II-A-A shall contain 2 reflective faces (approach and trailing) each of which shall reflect amber light. The body, other than the reflective faces, shall be yellow. The direction of the reflection of the trailing face shall be directly opposite to the direction of reflection of the approach face.

2. Nonreflectorized jiggle bar tiles shall be of the following types:

(a) Type W shall have a white body.

(b) Type Y shall have a yellow body.

B. Appearance Requirement

The top and sides of the jiggle bar tile shall be smooth and free from surface irregularities, pits, cracks, checks, chipping, discoloration and any other defects, which adversely affect appearance and application.

The bottom of the jiggle bar tile may be of a rough texture, free from gloss, glaze or any other substance that may reduce its bond to the adhesive. It shall be shaped such that any air, which may be entrapped during installation, will not impair adhesion. Exclusive of any irregularities that are intentionally manufactured as functional characteristics of the tile, the bottom shall not deviate from a true plane by more than 1/ 16 inch**.**

1147.04 Construction Methods

The Contractor shall use a crew experienced in the work of installing jiggle bar tile and in the necessary traffic control for such operations on the roadway surface and shall supply all the equipment, personnel, traffic control and materials necessary for the placement of the pavement markings as indicated or as directed by the Engineer or designated

representative. All work shall conform to the current edition of the Texas Manual of Uniform Traffic Control Devices (TMUTCD).

The jiggle bar tile shall be installed to the lines and spacings where indicated on the Drawings or as directed by the Engineer or designated representative. Guides to mark the lateral location of jiggle bar tile shall be established as indicated on the Drawings or as directed by the Engineer or designated representative. The Contractor will establish the pavement marking guides and the Engineer or designated representative will verify the location of the guides prior to final installation.

The pavement markers shall be placed in proper alignment with the Guides, The deviation rate in alignment shall not exceed 1 inch per 200 feet of roadway. The maximum deviation shall not exceed 2 inches nor shall any deviation be abrupt.

Markers placed which are not in alignment indicated on the Drawings shall be removed by the Contractor at the Contractor's expense. Removal shall be in accordance with Specification Item 874S except for measurement and payment. Guides placed on the roadway for alignment purposes shall not establish a permanent marking on the roadway.

When deemed necessary by the Engineer or designated representative, the Contractor, at his expense, shall place any additional pilot markings required to facilitate the placement of the permanent markings in the alignment specified. Any and all additional markings placed on the roadway for alignment purposes shall be temporary in nature and shall not establish a permanent marking on the roadway. Materials used for pilot markings and equipment used to place such markings shall be approved by the Engineer or designated, representative.

The surface on which tiles are to be placed shall be dry and shall be prepared by any method approved by the Engineer or designated representative to remove all forms of grease, oil, dirt and other materials deleterious to proper adhesion. Unless indicated otherwise on the Drawings, surface preparation for installation of jiggle bar tile will not be paid for directly but shall be considered subsidiary to this specification item.

Epoxy adhesive shall conform to the requirements of City of Austin Specification Item 8676S. The wet epoxy shall be machine mixed and applied in sufficient quantity so as to insure the following:

100 percent of the bonding area of the tile shall be in contact with the epoxy.

The tile itself shall not contact the pavement surface but shall sit on an epoxy "cushion".

When the tile is pressed onto the pavement, adhesive shall be forced out around its entire perimeter.

Any excess adhesive or other foreign material on or in front of the reflective face(s) of the tile shall be removed so that reflectivity will not be impaired. Any individual jiggle bar tile placed that does not conform to the requirements of this specification and/or as indicated on the Drawings shall be removed and replaced with tile conforming to these requirements at the Contractor's expense.

1147.05 Measurement

Jiggle Bar Tile will be measured as each jiggle bar tile complete in place.

1147.06 Payment

The work performed under this item and measured as provided under "Measurement" shall be paid for at the unit bid price for "Jiggle Bar Tile" of the type, color and material specified on the Drawings or lump sum, see bid items. The unit bid price shall include full compensation for all labor, materials, incidentals and services necessary to complete the work.

1148 Eliminating Existing Pavement Markings and Markers

1148.01 Description

This item shall govern the elimination of existing raised pavement markings of various types and sizes, and raised pavement markers as shown on the Drawings or as directed, in writing, by the Engineer or designated representative.

1148.02 Materials

All surface treatment material application rates shall be as directed by the Engineer or designated representative. Unless otherwise shown on the Drawings, surface treatment materials shall conform to the requirements of Specification Item 301, "Asphalts, Oils and Emulsions", and Specification Item 302S, "Aggregates for Surface Treatment". Testing of

surface treatment materials may be waived by the Engineer or designated representative.

Asphalt and aggregate types and grades shall be as shown on the Drawings or as approved by the Engineer or designated representative,

1148.03 Construction Methods

Elimination of existing pavement markings and markers shall be accomplished by one or more of the following methods as approved by the Engineer or designated representative.

A. Markings on Asphaltic Surfaces.

1 Placement of a surface treatment a minimum of two (2) feet wide to cover the existing marking.

2. Placement of a surface treatment, thin overlay or microsurfacing a minimum of one (1) lane in width in areas where directional changes of traffic are involved or other areas as directed by the Engineer or designated representative. Construction methods for surface treatments shall conforin to Specification Item 320S, "Two Course Surface Treatment"

B. Markings on Concrete Surfaces.

Removal by an approved burning method.

C. Markings on Asphaltic or Concrete Surfaces.

Removal by water, water-sand blasting techniques or any other method(s) proven satisfactory to the Engineer.

D. Markers on Asphaltic or Concrete Surfaces.

Removal by any mechanical method to remove marker and adhesive.

Existing pavement markings and markers on both concrete and asphaltic surfaces shall be removed in such a manner that color and/or texture contrast of the pavement surface will be held to a minimum.

Removal of pavement markings on concrete surfaces by blast cleaning shall be accomplished in accordance with Specification Item 875S,

"Pavement Surface Preparation for Markings", except for measurement and payment. Blast cleaning shall be performed in such a manner that damage to the Portland cement concrete surface is held to a minimum.

When thermoplastic pavement markings or prefabricated pavement markings are encountered, the application of heat may be used to remove the bulk of the marking material prior to blast cleaning. When heat is used, care shall be taken to prevent spalling of Portland cement concrete surfaces.

A burner may be used for complete removal of pavement markings. Broom removal or light blast cleaning may be used for removal of minor residue.

Damage to asphaltic surfaces, such as spalling, shelling, etc., that is greater than *V4* inch in depth and is caused by the removal of pavement markers shall be repaired by the application of a two (2) foot wide surface treatment for longitudinal markers with no directional change or a minimum of one (1) lane width surface treatment in areas where directional changes of traffic are involved.

Grinding is not an acceptable method of marker or marking removal. However, equipment utilizing special milling flails is considered acceptable in the removal of markings and markers on asphalt and Portland cement concrete surfaces.

1148.04 Measurement

This Specification Item will be measured by the square yard of surface treatment, thin overlay or microsurfacing (full lane width) placed; by each word, symbol or shape eliminated; by the lineal foot of markings eliminated; or by any other unit as shown on the Drawings, as each raised pavement marker.

This is a Drawings quantity measurement Item and the quantity to be paid for will be that quantity shown on the Drawings and on the Bid Form Section 00300U of the Contract Documents, except when an adjustment of quantities is merited. If no adjustment of quantities is required, additional measurements or calculations will not be required. On the other hand if the measured quantities vary from those shown on the Drawings and on the ,, Bid Form" by more than five (5) percent (or as stipulated under the measurement article for the Item), either party to the Contract may request a Change Order, in writing, for an adjustment of the quantities by each separate bid item, except that when stated in the particular item, the

adjustment will be made based upon a designated element shown in the Item.

The party to the Contract which requests the Change Order shall present, to the other, one copy of field measurements and calculations showing the revised quantities in question. These revised quantities, when approved by the Engineer or designated representative, together with all other quantities under the same bid item, shall constitute the final quantity for which payment will be made.

C.When quantities are revised by a change in design, the "Plan Quantity" will be increased or
decreased by the amount involved in the design change. Payment for revised quantities will be
paid for at the unit price bid for that bid item.

1148.05 Payment

The work performed and materials furnished in accordance with this Specification Item and measured as provided under "Measurement" will be paid for at the unit bid price for "Eliminating Existing Pavement Markings and Markers" of the various types specified. This price shall include full compensation for blast cleaning, mechanical cleaning and/or other cleaning methods; for all materials, tools, equipment and incidentals necessary to complete the Work, except as specified below.

No payment will be made for the elimination of pavement markers when pavement markers are to be removed in conjunction with the elimination of longitudinal markings or pavement rehabilitation that covers or removes pavement markers.

1149 Pavement Surface Preparation For Markings

1149.01 Description

This item shall govern the surface preparation of pavement surface areas prior to placement of pavement markings or raised pavement markers.

This specification is applicable for projects or work involving either inch-pound or SI units. Within the text the inch-pound units are given preference followed by SI units shown within parentheses.

1149.02 Materials

Abrasive blasting medium, when used, shall be a quality commercial product capable of producing the specified surface cleanliness without the deposition of deleterious materials on the cleaned surface. Water used in blasting operations shall be potable.

1149.03 Equipment

Equipment shall be maintained in good condition. Air compression equipment shall utilize moisture and oil traps, in working order, of sufficient capacity to remove contaminants from blasting air and prevent the deposition of moisture, oil or other contaminants on the street surface.

1149.04 Construction Methods

Widths, lengths and shapes of the prepared surfaces shall be of sufficient size to include the full area of pavement markings or raised pavement markers shown on the Drawings.

Surface preparation of Portland cement concrete surfaces shall be sufficient to remove contaminants. Damage to the street due to over-blasting shall be held to a minimum. Asphaltic surfaces shall be cleaned by brushing, washing, compressed air, high pressure water or any combination thereof to remove all forms of contamination and loose materials. All other surfaces to be cleaned by blast cleaning shall be cleaned sufficiently to remove loose and flaking materials from the street surface.

When existing markings are encountered, they shall be cleaned sufficiently to remove all loose and flaking materials. Small spots of old markings or contaminants of up to 0.5 square inch (320 MM2) in area may remain if the contaminant is not removed by the following test:

Firmly press a 10 inch long, two-inch wide strip of monofilament tape onto the surface to be tested, leaving approximately 2 inches free. Grasp the free end and remove the tape with a sharp pull.

Blasting pressure and technique shall be controlled to prevent damage to the pavement surface. Portland cement concrete surfaces shall not be cleaned by grinding..

1149.05 Measurement

This Specification Item will be measured by the lineal foot. of the various widths, by each of the various words, symbols or shapes, or by any other unit as shown on the Drawings.

This is a Drawings quantity measurement Item and the quantity to be paid for will be that quantity shown on the Drawings and on the Bid Form Section 00300U of the Contract Documents, except when an adjustment of quantities is merited. If no adjustment of quantities is required, additional measurements or calculations will not be required. On the other hand if the measured quantities vary from those shown on the Drawings and on the "Bid Form" by more than five percent (or as stipulated under the measurement article for the Item), either party to the Contract may request a Change - Order, in writing, for an adjustment of the quantities by each separate bid item, except that when stated in the particular item, the adjustment will be made based upon a designated element shown in the Item.

The party to the Contract which requests the Change Order shall present, to the other, one copy of field measurements and calculations showing the revised quantities in question. These revised quantities, when approved by the Engineer or designated representative, together with all other quantities under the same bid item, shall constitute the final quantity for which payment will be made.

When quantities are revised by a change in design, the "Plan Quantity" will be increased or decreased by the amount involved in the design change, Payment for revised quantities will be paid for at the unit price bid for that bid item.

1149.06 Payment

The work performed and materials furnished in accordance with this Specification Item and measured as provided under "Measurement" will be paid for at the unit bid price for "Pavement Surface Preparation for Markings" of the various types specified, This price shall include full compensation for all materials, tools, equipment, labor and incidentals necessary to complete the
Work.

1150 Miscellaneous

1151 Pullboxes

1151.01 Description

This item shall govern the construction of pull-boxes by methods indicated on the Drawings and in conformity with this specification item.

1151.02 Submittals

The submittal requirements of this specification item include:

A. Identification of the number and types of pull boxes proposed, Construction details (mortar, reinforcing steel, etc.) for the pull box and supporting foundation.

1151.03 Materials

Non-traffic type pull-boxes, of the size specified on the Drawings, shall be precast concrete with cast iron (24 inches) Non-Traffic Type Pull Box", and shall be equal to precast concrete Traffic type pull-boxes, of the size specified on the Drawings.

1151.04 Construction Methods

Pull-boxes shall be constructed in accordance with the lines, grades, details and dimensions indicated on the Drawings or established by the Engineer or designated representative.

Pull-boxes, which are exposed to view, as in sidewalks, shall be accurately set to the finished grade and anchored.

Masonry work for the lower portion of the pull-boxes shall be accurately cut around
the conduits and a smooth accurate bed shall be provided for the precast concrete
upper portion of the pull-box. The precast section shall be set in mortar upon the
lower masonry course. The inside of pull-boxes shall be left clean and the joints shall
be wiped.

1151.05 Measurement

Pullboxes shall be measured as each item complete in place.

1151.06 Payment

Pullboxes shall be paid for at the unit bid price per each. The unit bid price shall include full compensation for furnishing and constructing the pull-box as detailed on the Drawings and Standard Details, complete with all fittings, covers', masonry work, excavation and backfill, for all labor, tools, equipment and incidentals necessary to complete the work.

1151 Electrical Conduit Ducts

1152.01 Description

This item shall govern all materials furnished and all applicable work undertaken in construction of electrical conduit ducts for Traffic Control projects, including clearing, excavation, bedding, jointing, backfill materials and tests, prescribed under this standard specification item.

The ducts shall be of the sizes, types, class and dimensions indicated on the Drawings and shall include all joints or connections to new or existing ducts, pull-boxes or other structures that may be required to complete the work to the specified lines and grades in accordance with details indicated on the Drawings and appropriate specifications and standard published practices of the trade associations for the material specified.

1152.02 Submittals

The submittal requirements of this specification item include:

A: Identification of the number, types (i.e. I pipe, 2 pipes, etc.) and sizes of duct,

B. Construction details.

1152.03 Materials

A. Electrical Conduit Pipe
Polyvinyl Chloride (PVC) Pipe and fittings used for ducts shall conform to National Electrical Code (NEC).

B. Joints
Joints shall be sealed with a solvent meeting the requirements of the NEC to assure leak proof joints. The ends of ducts shall be projected into the pull-boxes and sealed as indicated on the, Drawings.

1152.04 Construction Methods

A. Construction
Shall conform to the Standard Specifications Section 600. Section 600 cover requirements shall be revised to include at least the minimum cover requirements of the NEC based upon line voltage/amp capacity.

B. Conduit Bedding
Where not otherwise provided on the Drawings, all ducts shall be placed in a continuous envelope of bedding sand. The bedding material shall extend from 6inches below to 6-inches above the outer parts of the pipe, fittings and accessories for ducts.

C. Laying Duct
The duct shall not be placed in the trench until:

- excavation has been completed,
- the bottom of the trench, compacted and
- The trench completed as indicated on the Drawings.

All duct shall be 'stringed' for ease in pulling the cable through the PVC duct pipe after construction is complete. A continuous line of string shall extend throughout the pipe and be mechanically tied at each end outside the pipe. The string shall be nylon string with a tensile strength of at least 300 pounds, unless otherwise indicated on the drawings. The ends of the duct pipe shall be projected into pull-boxes and sealed as indicated on the Drawings.

1152.05 Measurement

Duct will be measured by the lineal foot along the centerline of the duct for the various sizes and classes of duct in place, conforming to these specifications, for which all work including excavation and backfill is complete and accepted by the Engineer or designated representative.

1152.06 Payment

Payment for duct, measured as prescribed above, will be made at the unit bid price per lineal foot, complete in place, for the various sizes of pipe, of the materials and class indicated on the Drawings, unless unstable material is encountered.

1160 Project Signs

1161.01 Description

This item shall govern furnishing, fabricating and erecting Project Signs on Capital Improvement Projects (C.I.P) and for project identification at other construction sites, when required on the Drawings. The C.I.P. signs shall be constructed as indicated on the Drawings.

1161.02 Materials

A. Sign Face
Sign face shall be manufactured on standard exterior waterproof plywood sheets or other suitable material approved by the Engineer. Unless indicated otherwise on the Standard Details or Drawings, the thickness of the plywood sheet shall be a minimum of 1/4inches.

B. Posts
Lumber posts, of the size indicated on the Standard Details or on the Drawings, shall be pressure treated with pentachlorophenol.

C. Paint
Exterior oil base paint, colors as indicated on the Standard Details or on the Drawings.

1161.03 Installation

The signs shall be erected at each major entrance to the project for maximum public identification and exposure. At locations where construction is confined to a specific area, the installed sign size shall be 4 x 8 foot. At locations where roadway construction is in progress, such as a street paving or construction of a sidewalk, the sign shall be 2 x 3 foot. The signs shall be posted on portable wood frames or stanchions and will be located in the proximity of the work area as construction progresses. All lumber shall be painted with 2 coats of paint as indicated herein, on the Standard Details or in the Drawings.

In special cases the size of the sign may be changed to meet special requirements, but general proportions shall be maintained.

It shall be the responsibility of the Contractor to maintain and relocate signs, if necessary during the progression of the project. Care shall be

exercised to assure that placement of the signs does not interfere with or cause sight obstruction to vehicular and pedestrian traffic.

The Contractor may install, at his own expense, company signs to identify the Contractor, architectural firm, etc. Signs are to be securely attached to the posts at locations indicated on the Drawings and shall not be larger than I8 x 36 inches.

1161.04 Measurement

The work performed and the materials furnished as prescribed by this item as indicated on the Drawings will not be measured for payment but will be considered subsidiary to the various items included in the contract unless included as a separate pay item in the contract. When included in the contract, signs shall be measured by lump sum or per each.

1161.05 Payment

The work performed and the materials furnished as prescribed by this item shall be paid for by lump sum or per each price bid only. The 'lump sum' bid or 'per each' price bid shall include full compensation for all work performed and all materials furnished in constructing, transporting and maintaining the signs as specified on the Drawings and as directed by the Engineer or designated representative.

Environmental Protection
Section 1200

1210 Scope

This section covers the preventive measures required for protection of the environment during construction operations, except for those measures set forth in the other sections of these specifications.

1220 General

The Contractor shall provide environmental protection as required to insure the retention of the environment in its natural state to the greatest possible extent during project construction and to enhance the natural appearance in its final condition. Environmental protection shall include consideration of air, water, and land protection and involves solid-waste management as well as other pollutants. For the purpose of this specification environmental pollution is defined as the presence of chemical, physical, or biological elements or agents which adversely affect human health or welfare; unfavorably alter ecological balances of importance to human life; affect other species of importance to man; or degrade the landscape of the area for aesthetic and recreational purposes.

1230 Applicable Regulations

The Contractor shall comply with all applicable Federal, State and local laws, and regulations concerning environmental pollution control and abatement. Contractor shall be responsible for obtaining NPDES permits and complying with the provisions of the Clean Water Act, as amended, (33 USC 1251), for sites larger than five acres. ***Sites larger than five (5) acres shall have an approved erosion control plan on file with the City. Sites (5) acres or smaller shall use construction methods that prevent erosion and shall conform to this section.*** Placement of fill or construction in a floodplain will require a separate permit from the City of Kerrville and is subject to the requirements of the Flood Prevention Ordinance.

1240 Notification

The City Engineer will notify the Contractor in writing of any observed noncompliance with the foregoing provisions. If the Contractor fails or refuses to promptly take corrective action, the City Engineer may issue an order stopping all or part of the work until satisfactory corrective action has been taken. No part of the time lost due to any such stop orders shall be reason for extension of time or for excess costs or damages unless it is determined that the Contractor was in compliance.

1250 Subcontractors

Compliance with the provisions of this section by subcontractors will be the responsibility of the Contractor.

1260 Protection of Land Resources

1260.01 General: The land resources within the right of way of the City but outside the limits of permanent work performed under this contract shall be preserved in their present condition or be restored to a condition after completion of construction that will appear to be natural and not detract from the appearance of the project. Insofar as possible, the Contractor shall confine his construction activities to areas defined by the plans or specifications. At the onset of borrow excavation, topsoil shall be saved for use in restoring the borrow area. Waste and borrow areas shall be leveled or trimmed to regular lines and shaped to provide a neat appearance. In all instances the restored area shall be well drained, so as to prevent the accumulation of stagnant water.

1260.02 Prevention of Landscape Defacement: Except in areas shown on the plans or specified to be cleared, the Contractor shall not deface, injure, or destroy trees or shrubs, nor remove or cut them without approval. Trees designated to be saved shall be protected from either excavation or filling within the root zone closer than the normal drip line of the tree. No ropes, cables, or guys shall be fastened to or attached to any existing trees for anchorages unless approved. Where such use is permitted the Contractor shall first adequately wrap the trunk with burlap or rags over which softwood cleats shall be tied before any rope, cable, or wire is placed. The Contractor shall be responsible for any damage resulting from such use. Where, in the opinion of the Engineer, trees may possibly be defaced, bruised, injured, or otherwise damaged by the Contractor's equipment or by his blasting, dumping, or other operations, he may direct the Contractor to protect adequately such trees by placing boards, planks, or poles around them. When earthwork operations are liable, in the opinion of the City Engineer, to cause rock to roll or otherwise be displaced into uncleared areas, the Contractor shall construct barriers to protect the trees. Rocks that are displaced into uncleared areas shall be removed. Monuments, markers, and works of art shall be protected similarly before beginning operations near them.

1260.03 Restoration of Landscape Damage: Any trees or other landscape feature scarred or damaged by the Contractor's equipment or operations shall be restored as nearly as possible to its original condition at the Contractor's expense. The City Engineer will decide what method of restoration shall be used, and whether damaged trees shall be treated or removed and disposed of under requirements for clearing and grubbing. All scars made on trees (not designated on the plans to be removed) by equipment, construction operations, or by the removal of limbs larger than 1 inch in diameter shall be coated as soon as possible with an approved tree wound dressing. All trimming or pruning shall be performed in an approved manner by experienced workmen with saws or pruning shears. Trees that are to remain, either within or outside established clearing

limits, that are subsequently damaged by the Contractor and are beyond saving in the opinion of the City Engineer, shall be immediately removed and replaced with a nursery-grown tree of the same species and size approved by the City Engineer.

1260.04 Location of Temporary Field Offices, Storage, and Other Construction Buildings: The location on City property of the Contractor's temporary field office, storage, and other construction buildings, required temporarily in the performance of the work, shall require written approval of the City Engineer. The preservation of the landscape shall be maintained at all temporary building sites and in the construction of buildings.

1260.05 Post-Construction Cleanup or Obliteration: The Contractor shall obliterate all signs of temporary construction facilities such as haul roads, work areas, structures, foundations of temporary structures, stockpiles of excess or waste materials, or any other vestiges of construction, as directed by the City Engineer.

1260.06 Erosion Control: Surface drainage from cuts and fills within the construction limits, whether or not completed, and from borrow and waste disposal areas shall be graded to control erosion within acceptable limits. Vegetative strips (widths determined and delineated on construction plans by Engineer) shall be maintained throughout construction for erosion control. Temporary erosion and sediment control measures such as berms, dikes, drains, or sedimentation basins, shall be provided and maintained until permanent drainage and erosion control facilities are completed and operative. The area of bare soil exposed at any one time by construction operations shall be held to a minimum. Grass and vegetation areas designated as not being disturbed shall be revegetated immediately by drill seeding, sodding or other means acceptable to the City Engineer. The street right of ways must be covered with six inches (6”) of top soil, reseeded (by drill seeding only) or resodded, and grass established before the City will accept the proposed subdivision. Additionally, an erosion control plan must be submitted to the City Engineer for all construction.

1260.07 Janitorial Services: The Contractor shall furnish daily janitorial services for the temporary field office, storage, and other construction buildings on the project site. The Contractor shall also provide daily trash collection and cleanup of the buildings and adjacent outside areas, snow removal in season, and shall dispose of all discarded debris, aggregate samples and concrete test samples in a manner approved by the City Engineer.

1260.08 Burning: No material shall be burned at the project site unless otherwise specified in other sections of these specifications or authorized by the Fire Marshall of the City of Kerrville.

1260.09 Dust and Mud Control: The Contractor will be required to maintain all excavations, embankments, stockpiles, haul roads, permanent access roads, plant sites, waste areas, borrow areas, and all other work areas within or without the project boundaries free from dust which would cause a hazard or nuisance to others. Approved

temporary methods of stabilization consisting of sprinkling, chemical treatment, light bituminous treatment or similar methods will be permitted to control dust. Dust control shall be performed as the work proceeds and whenever a dust nuisance or hazard occurs. Contractor shall provide measures to prohibit the off-site tracking of mud. Measures may include placement of rock or gravel at exits to site and provision of street sweeping equipment to remove dirt and mud which is tracked onto public streets. Streets adjacent to the working site shall remain free of mud and dust at all time during prosecution of the contract.

1260.10 Maintenance of Pollution Control Facilities During Construction: During the life of this contract the Contractor shall maintain all facilities constructed for pollution control under this contract as long as the operations creating the particular pollutant are being carried out or until the material concerned has become stabilized to the extent that pollution is no longer being created.

1260.11 Pesticides (Insecticides, Fungicides, Herbicides, etc.): Application of all pesticides shall be accomplished by certified pest control personnel or under the supervision of a certified pest control operator. Delivery and storage of pesticides will be monitored by certified personnel to insure the adequacy of containers and the safe storage of toxic materials. Disposal of containers and chemicals will be monitored to prevent pollution of natural drainage systems.

1260.12 Seeding for Erosion Control:

A. Description

This item shall govern the preparation of a seed bed to the lines and grades indicated on the Drawings, drill seeding, fertilizing, watering and other management practices along and across such areas as indicated in the Drawings or as directed by the Engineer or designated representative. In general, seeding or sodding must begin immediately after final grade when six inches of topsoil has been achieved.

B. Submittals

The submittal requirements for this specification item shall include:

1) Identification of the type, source, mixture, pure live seed (PLS) and rate of application of the seeding.

2) Type and rate of application of fertilizer.

C. Materials

1) Seeds: All seed must meet the requirements of the Texas Seed Law including the labeling requirements for showing PLS, name and type of seed. The seed furnished shall be of the previous season's crop and the date of analysis shown on each bag shall be within nine months of the time of delivery to the project. Each variety of seed shall be furnished and delivered in separate bags or containers. A sample of each variety of seed shall be furnished for analysis and testing when directed by the Engineer or designated representative.

2) Water: Water shall be clean and free of industrial wastes and other substances harmful to the growth of grass or the area irrigated.

3) Top Soil. Topsoil shall be fertile soil, be easily cultivated, be free from objectionable material, have a relatively high erosion resistance and be readily able to support the growth of planting, seeding or sodding. Existing topsoil on site shall be kept separate from other excavated materials to that it can be reused when backfilling the ditch.

4) Fertilizer. The fertilizer shall be delivered in bags or containers clearly labeled showing the analysis. The figures in the analysis represent the percent of nitrogen, phosphoric acid, and potash nutrients.

D. Construction Methods

1) Preparing Seed Bed: After the designated areas have been completed to the lines, grades and cross sections shown on the plans and as provided for in other items of this contract, drill seeding shall be performed in accordance with the requirements hereinafter described. All areas to be seeded shall be done using a seed drill suitable for seeding into untilled soil. The seedbeds shall be cultivated sufficiently to reduce the soil to a state of good tilth when the soil particles on the surface are small enough and lie closely enough together to prevent the seed from being covered too deeply for optimum germination.

2) Watering: All watering shall comply with City Ordinances. Broadcast seeded areas shall immediately be watered with a minimum of 5 gallons of water per square yard or as needed and in the manner and quantity as directed by the Engineer or designated representative. Hydraulic seeded areas and native grass seeded areas shall be watered commencing after the tackifier has dried with a minimum of 5 gallons of water per square yard or as needed to keep the seedbed in a wet condition favorable for the growth of grass.

Watering applications shall constantly maintain the seedbed in a wet condition favorable for the growth of grass. Watering shall continue until the grass is uniformly 1 1/2 inches in height or accepted by the City Engineer or designated representative. Watering can be postponed immediately after a 1/2 inch (12.5 mm) or greater rainfall on the site but shall be resumed before the soil dries out.

E. Method of Drill Seeding

Seed shall be drilled at a depth of from ¼ inch to 3/8 inch utilizing a pasture or rangeland type drill. All drilling shall be along the contour of the slope.

SEEDING MIXTURES IN POUNDS

OF PURE LIVE SEED PER ACRE

Warm Season Feb 1 – May 1				Cool Season Sept 1 – Nov 30	
Rural		Urban		Temporary	
Green Sprangletop	0.9	Green Sprangletop	1.1	Tall Fescue	4.0
Bermudagrass	1.2	Bermudagrass	1.5	Oats	21.0
Buffelgrass	2.0	Sideoats	3.7	Wheat (red, winter)	30.0
K-R Bluestem	1.0				

F. Measurement: Work and acceptable material for "Seeding for Erosion Control" will be measured by the square yard complete in place, with a minimum of 70 percent coverage.

G. Payment: The work performed and materials furnished and measured will be paid for at the unit bid price for "Seeding for Erosion Control" of the method specified in the contract documents. The unit bid price shall include full compensation for furnishing all materials, including all topsoil, water, seed, tackifier, fertilizer or mulch and for performing all operations necessary to complete the work.

1260.13 Construction Exits: Rock used for construction exits shall consist of crushed stone ranging in sizes of a minimum of 3 inches to maximum of 6 inches in diameter. The aggregates shall be clean, hard, durable materials free from adherent coatings, salt, alkali, dirt, clay, loam, shale, soft or flaky materials, or organic and injurious matter.

Exits shall be maintained in a condition that will prevent tracking or flowing of sediment onto public right of way.

1260.14 Sediment Control Fence: The fence shall be a net-reinforced fence, using woven geotextile fabric. The silt fence shall be supplied by an approved manufacturer listed in Section 26 of the Texas Department of Transportation's Material Producer List of *Prequalified Manufacturers for Silt Fence, Filter Fabric, and Fabric Underseal.*

The posts shall be a minimum of 48 inches long, and shall be wood or steel. Soft wood posts shall be at least 3 inches in diameter or nominal 2 X 4 inches. Hardwood posts shall have a minimum cross section of 1.5 X 1.5 inches. Steel posts shall be "T" or "L" shaped with a minimum weight of 1.3 pounds per linear foot. The posts shall be imbedded 18 inches deep with spacing of 6 to 8 feet and installed on a slight angle toward the anticipated run-off source.

Trenches shall be dug along the uphill side of the fence to anchor 6 to 8 inches of fabric. The trench shall have a minimum cross section of 6 X 6 inches. The fabric shall be installed in the trench such that 4 to 6 inches of fabric is against the side of the trench and approximately 2 inches of fabric is across the bottom in the upstream direction. The trench shall then be backfilled and hand tamped.

The net reinforcement shall be galvanized welded wire mesh of a minimum 12.5 gauge wire or equal with a maximum opening size of 2 inches by 4 inches and shall be at least 24 inches wide. The reinforcement shall be attached to the end posts at a minimum of 4 locations and to the top strand of reinforcement at a maximum spacing of 15 inches. Splices shall occur at a fence post and shall have a minimum lap of 6 inches attached in at least 6 places.

The temporary sediment control fence shall be used during construction near the downstream perimeter of a disturbed area to intercept sediment from sheet flow. The fence shall be maintained in good condition by the Contractor. When the accumulated sediment deposit reaches a depth of approximately 6 inches, it shall be removed and disposed of at approved sites in a manner that will not contribute to additional siltation.

Temporary sediment control fence will be measured by the linear foot, complete in place. The work performed and the materials furnished as prescribed by this Item will be paid for at the unit price bid for "Silt Fence", which price shall be full compensation for furnishing, placing and maintenance of the fence; for all required trenching, fence posts, fabric and backfill; and for all labor, tools, equipment and incidentals necessary to complete the work.