CITY OF KERRVILLE

WASHINGTON/JEFFERSON DRAINAGE PROJECT

2005

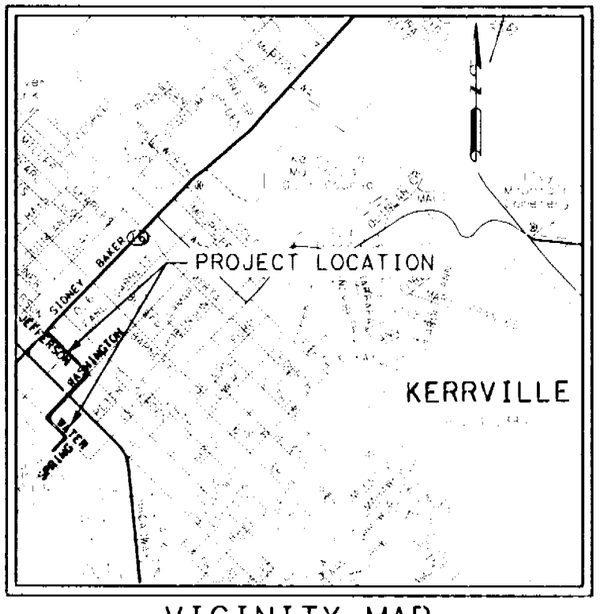

VICINITY MAP

SCALE: N.T.S.

INDEX OF SHEETS

SHEET NO.	DESCRIPTION
1	TITLE SHEET
2	TYPICAL SECTIONS
3	GENERAL NOTES
4	ESTIMATED QUANTITIES
5	INTERIOR DRAINAGE AREA MAP
6	HYDRAULIC COMPUTATION
7-10	DRAINAGE LAYOUT
11-12	DRAINAGE SECTIONS
13	OUTFALL DETAILS
	STANDARDS
14	DROP INLET TYPE Y-1
15	DROP INLET TYPE Y-1 (MOD.)
16	DROP INLET TYPE Y-2 THRU Y-5
17	MANHOLE TYPE 1 THRU 5

PLANS PREPARED BY:

S&B INFRASTRUCTURE, LTD.

Engineering Management Technology

MICHAEL C. RIOJAS, P.E. PROJECT MANAGER

69690 - 2-22-05

FEBRUARY 2005

n:\Austin1\Project\U9432900\DGN\xxxxxco.dgn

PROJ. NO.

LETTING DATE

COUNTY

HWY. NO.

DATE ACCEPTED

LEVELS DISPLAYED

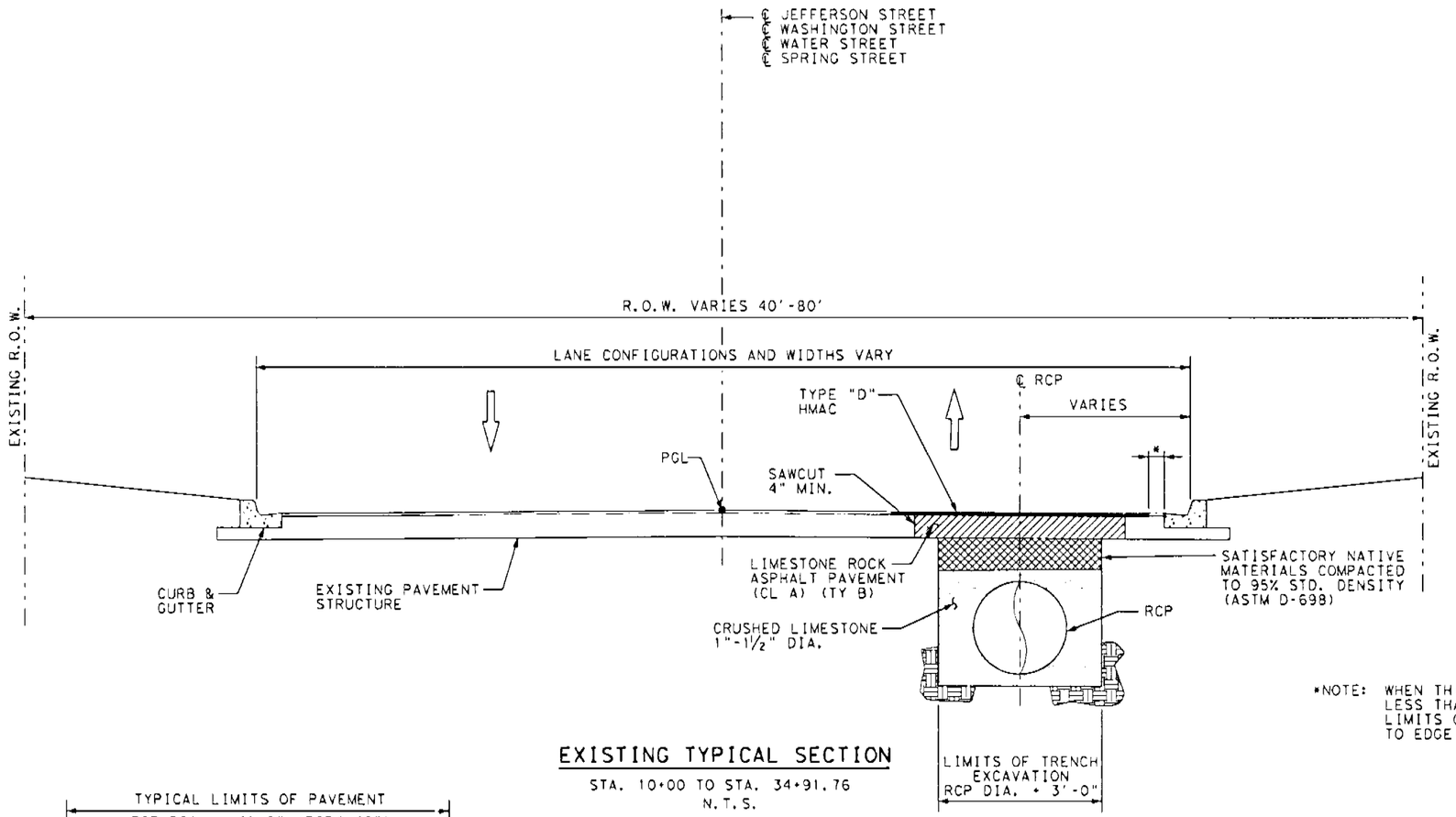

EXISTING TYPICAL SECTION

STA. 10+00 TO STA. 34+91.76
N.T.S.

*NOTE: WHEN THIS DISTANCE IS LESS THAN 1'-0", CONTINUE LIMITS OF PAVEMENT REPAIR TO EDGE OF CURB & GUTTER.

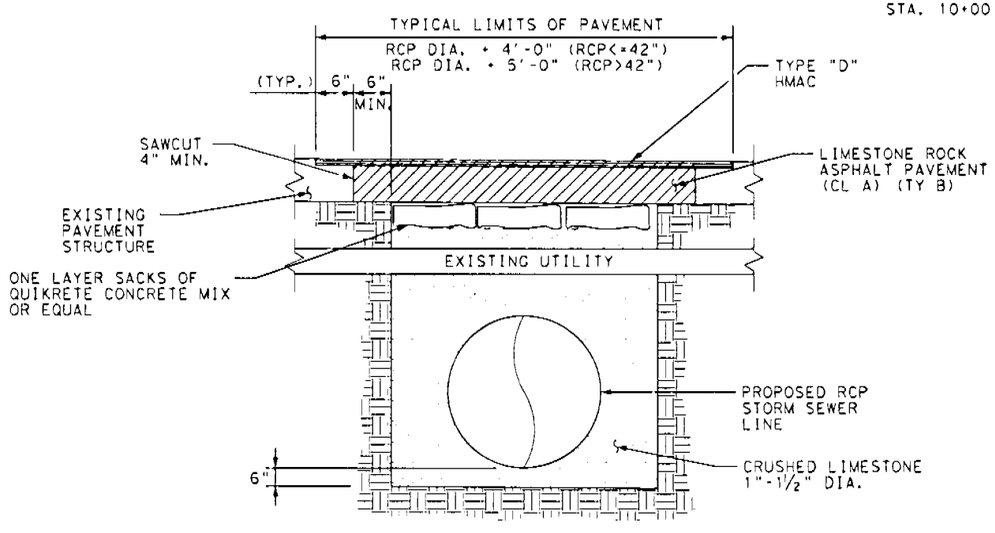

DETAIL OF PAVEMENT REPAIR AT UTILITY CONFLICT

NOTE: CONTRACTOR SHALL PROVIDE OSHA-APPROVED TRENCH PROTECTION SYSTEM WHERE TRENCH DEPTH EXCEEDS FIVE FEET.

STATE OF TEXAS
DOUGLAS R. HIVELY
86278
PROFESSIONAL ENGINEER

The seal appearing on this document was authorized by DOUGLAS R. HIVELY P.E. 86278, on 12/29, 2004

LINEAR DIMENSIONS ARE IN FEET UNLESS SHOWN OTHERWISE.

S&B INFRASTRUCTURE, LTD.
Engineering ✪ Management ✪ Technology

CITY OF KERRVILLE

SYSTEM "A"
TYPICAL SECTIONS

SHEET NO. 2

DESIGNED BY: DM	CHECKED BY:	DATE: 12/29/2004
DRAWN BY: RT	CHECKED BY:	DATE: 12/29/2004
APPROVED BY: MCR	DATE: 12/29/2004	PROJECT NO: 9432900

N:\Austin\Project\U9432900\DGN\xxxxxtsp.dgn
12/29/2004

GENERAL NOTES:

1. All construction shall comply with the City of Kerrville and Texas Commission Environmental Quality (TCEQ) ordinances, codes and regulations.

2. The contractor is responsible for notification of all authorized inspectors and persons in charge of private and public utilities affected by this project prior to commencement of work.

3. All bidders are hereby notified to make such subsurface investigations as they deem necessary. No additional payment shall be made for rock, sand, gravel or other unstable conditions encountered in utility excavations.

4. No blasting will be permitted.

5. The contractor shall provide trench safety in accordance with OSHA specifications and provide daily inspections to ensure that those requirements are being met. The contractor is responsible for ensuring the safety of those persons working in and around the trench.

6. All entrances to property shall be restored immediately. The contractor shall maintain access to property adjacent to construction at all times. Should the contractor find any discrepancy or omissions from the construction plans, he will notify the City Engineer at once to obtain clarification.

7. Location and depth of existing utilities, to include service laterals, shown here are approximate only. Actual depths and locations shall be field verified by the contractor prior to construction. The contractor agrees to be fully responsible for any and all damages to existing utilities caused by his failure to locate and preserve any and all existing utilities. The contractor shall repair damages to existing utilities at no additional cost.

8. It shall be the contractor's responsibility to locate utility service lines 48 hours prior to excavation and protect the same utilities during construction.
   a. Electrical Lines - KPUB - 800 - DIG - TESS
   b. Water/Wastewater - City of Kerrville - (830) 792-8319
   c. Gas Lines - Lone Star Gas - 800 - DIG - TESS
   d. Telephone - Kerrville Telephone - 800 - DIG - TESS
   e. Cable TV - Time Warner - 830-257-4700

9. Contractor is responsible for the removal of all wastes associated with construction. Contractor shall protect all trees on project site except those located within the pavement limits. No existing trees shall be trimmed without authorization of the Engineer.

10. The contractor shall be responsible for safeguarding and protecting all material and equipment stored on the jobsite. The contractor shall be responsible for the storage of materials in a safe and workmanlike manner to prevent injuries, during and after work hours, until project completion.

11. The contractor shall not unload any track-type construction machinery on any existing pavement or cross over any existing pavement or curb during the project, unless that pavement or curb is scheduled to be replaced as part of this project, or upon approval of the Engineer.

12. Contractor shall replace and restore to original, or better, condition, location and elevation, all existing improvements disturbed by construction activities at no additional cost unless otherwise noted. Any other incidental work associated with this project that is not specifically identified shall be considered subsidiary to applicable bid items and there will be no separate payment. CONTRACTOR SHALL REMOVE 48" Φ DEAD TREE AT END OF SPRING STREET (NO SEPARATE PAY). SEE SHEET 10.

13. The contractor must maintain all streets within project limits open to through traffic by repairing trenches, potholes, leveling up with asphalt, etc. at no direct payment.

14. The contractor shall be responsible for providing suitable access accommodations for school children and pedestrians.

15. The contractor shall provide access for delivery of mail by the U.S. Postal Service.

16. The contractor shall provide for access to residences and all businesses at all times within all the phases of the work.

17. Remove, as soon as practical, accumulated waste and open each block for public use. Use of any portion of street shall not constitute acceptance of any portion of work. Backfill and shape trenches across street intersections or driveways for safe traffic at night or, where permitted, span open trenches with traffic rated steel plates or other approved devices to permit traffic flow. When driveways are cut, immediate placement of steel plates or other approved devices for ingress or egress of vehicles may be directed if undue hardship to property owner would otherwise result.

18. Do not block ditches, inlets, fire hydrants, gas valves, etc., and, where necessary, provide temporary drainage.

19. The contractor shall provide the City an emergency telephone number for evenings, weekends, and holidays by the first working day of the project. This telephone number must be a commercial answering service. The answering service must be able to contact the contractor and have the contractor respond to the City staff within two hours of the initial contact.

20. The contractor is responsible for repairing all streets outside of the project limits which are damaged due to construction activities. The replaced section must be approved by the City Engineer. There will be no direct payment for this work.

21. Monuments for horizontal and vertical control of the project have been established by the owner, these benchmarks are shown on the drawings. Contractor shall provide detailed staking for construction from these referenced marks to the extent necessary to assure compliance with proposed grades and alignment. Contractor will not be paid directly for construction staking. The work is subsidiary to various bid items of which, it forms a component.

STORM SEWER NOTES:

1. The contractor shall be responsible for maintaining water service to existing structures and fire hydrants at all times during construction, except during approved periods of outage, as allowed by the City Engineer. Maintaining service shall include repair of leaks or breaks on existing water mains or services which may occur as a result of construction activities. Contractor shall notify the City Engineer prior to the need to close or open any water valves, only city personnel may open or close water valves on the existing system. No additional payment shall be allowed for repair of water mains required as result of construction activities.

2. Water jetting backfill will not be permitted. All storm sewer shall be bedded and backfilled as detailed in the construction plans and specifications.

3. Concrete storm sewer pipe shall be reinforced concrete pipe (ASTM C-55 and C-76 class III).

4. Contractor shall be responsible for excavating, uncovering, and verifying the flowline elevations of all sanitary sewer mains prior to placing storm sewer pipe. Contact the City Engineer if conflicts exist with sanitary sewer mains, sewer services, water mains & services. sewer services, water mains and services

5. After construction, storm sewer testing shall be performed using a video camera, observed by the City Inspector and the contractor, as the camera is run through the line. The contractor at his expense must replace any abnormalities such as broken pipe, misaligned or offset joints.

6. Contractor shall seal joints with cold applied butyl mastic sealant. All lifting holes must also be sealed with a preformed concrete plug and butyl mastic sealant.

7. Excavated spoil (excluding asphalt & concrete) may be hauled to the city landfill (if it is suitable for landfill daily cover) and dumped at no charge. Coordinate with city inspector.

TRAFFIC CONTROL NOTES:

1. The contractor shall be responsible for providing and maintaining all barricades, warning signs, flashing lights, and traffic control devices in accordance with the Texas Manual on Uniform Traffic Control Devices. and shown on a Traffic Control Plan submitted by the contractor for approval by the City Engineer.

2. It is the contractor's sole responsibility to see that all traffic control devices are properly installed and maintained at the job site in accordance with the plans, specifications and related industry standards and regulations

3. The Contractor shall provide, erect and maintain at all times during the progress or temporary suspension of the work suitable barricades, fences, signs or other adequate warnings or protection, and shall provide, keep and maintain such danger lights, signals, and flagmen as may be necessary to insure the safety of the public as well as those engaged in connection with the work. All barricades and obstructions shall be protected at night by signal lights which shall be suitably distributed across the roadway and which shall be kept burning from sunset to sunrise. The Contractor shall provide all barricades and the placement of all barricades shall meet the requirements as provided within Part VI, Texas Manual on Uniform Traffic Control Device for Streets and Highways.

4. As work progresses, location of temporary traffic control devices will be adjusted and modified, as necessary by the contractor. If need arises, additional barricades and directional devices, may be ordered by the Engineer at the contractor's expense.

5. Temporary traffic control devices shall conform to the Texas Manual on Uniform Traffic Control Devices.

6. The contractor shall maintain continuous access to all intersecting streets unless otherwise shown on these plans. Intersecting streets shall be constructed in stages so as to maintain access. Intersection work shall be done during weekend hours or as directed by the Engineer. No two adjacent intersections may be constructed simultaneously. With approval from the Engineer, the Contractor may close an entire intersection. The Contractor will be required to provide a detour plan for such a closure to the Engineer for approval.

7. Except where approved otherwise, do not hinder or inconvenience travel on streets or intersecting alleys for more than two blocks at any one time. Whenever street is closed, place properly worded sign announcing fact to public, with proper barricades at nearest street corners, on both sides of obstruction. Leave no street or driveway blocked at night. All street closures shall be reported to the Police Department (830) 257-8181and Fire Department (830) 257-8449 as well as the City Inspector.

8. The contractor shall maintain either the existing or temporary street name signs at each intersection onsite throughout construction. If the existing street name signs are used, they must be maintained in the condition encountered prior to the beginning of construction. If temporary signs are used during construction, they shall have a minimum of 4-inch letters, and may be fabricated with construction zone material (black legend on orange background, using plywood substrate, etc.).

9. Failure of the Engineer to notify the Contractor to maintain barriers, lights, signals, or flagmen shall not relieve the Contractor from this responsibility.

10. The Contractor's responsibility for the safeguarding of traffic as specified above shall cease when the work included in the contract is completed and accepted by the City.

STATE OF TEXAS
DOUGLAS R. HIVELY
86278
REGISTERED PROFESSIONAL ENGINEER

The seal appearing on this document was authorized by DOUGLAS R. HIVELY P.E. 86278, on 12/29, 2004

LINEAR DIMENSIONS ARE IN FEET UNLESS SHOWN OTHERWISE.

S&R INFRASTRUCTURE LTD
Engineering ✪ Management ✪ Technology

CITY OF KERRVILLE

SYSTEM "A"
GENERAL NOTES

SHEET NO. 3

DESIGNED BY:	CHECKED BY:	DATE:
DRAWN BY:	CHECKED BY:	DATE:
APPROVED BY:	DATE:	PROJECT NO: 943290

N:\Austin\Project\U9432900\DGN\xxxxx*gennotes.dgn
12/29/2004

LIST OF BID ITEMS

400-0501	400-0505	400-0510	401-2001	402-0501	0420-0659	459-XXXX	464-0505	464-0507	464-0510	0464-0511	0464-0512	465-0556	465-0557	0465-0752	0465-0752	465-0753	0465-0825	0465-0826
							REINFORCED CONCRETE PIPE CLASS III					MANH (COMPL)		INLET (COMPL)				
STRUCT EXCAV	STRUCT EXCAV (TRENCH)	CUT & RESTORING PAV (ASPH)	FLOWABLE BACKFILL	TRENCH EXCAV PROTECT	CL C CONC (RETAINING WALL)	GABION MATRESS (GALV) (18 IN)	24 IN	30 IN	42 IN	48 IN	54 IN	(TY 2)	(TY 3)	(DROP) TY Y-1	(DROP) TY Y-1 (MOD)	(DROP) TY Y-2	TY 2 JCT BOX (5 FT X 5 FT)	TY 3 JCT BOX (6 FT X 6 FT)
CY	CY	SY	CY	LF	CY	SY	LF	LF	LF	LF	LF	EA	EA	EA	EA	EA	EA	EA
1054	6960	2326	140	2326	28	425	108	46	488	495	956	2	3	4	1	3	1	2

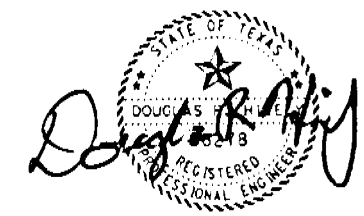

The seal appearing on this document was authorized by DOUGLAS R. HIVELY P.E. 86278, on FEB 22 2005

LINEAR DIMENSIONS ARE IN FEET UNLESS SHOWN OTHERWISE.

S&B INFRASTRUCTURE LTD.
Engineering · Management · Technology

CITY OF KERRVILLE

SYSTEM "A"
ESTIMATED QUANITIES

SHEET NO. 4

DESIGNED BY:	CHECKED BY:	DATE:
DRAWN BY:	CHECKED BY:	DATE:
APPROVED BY:	DATE:	PROJECT NO:9432900

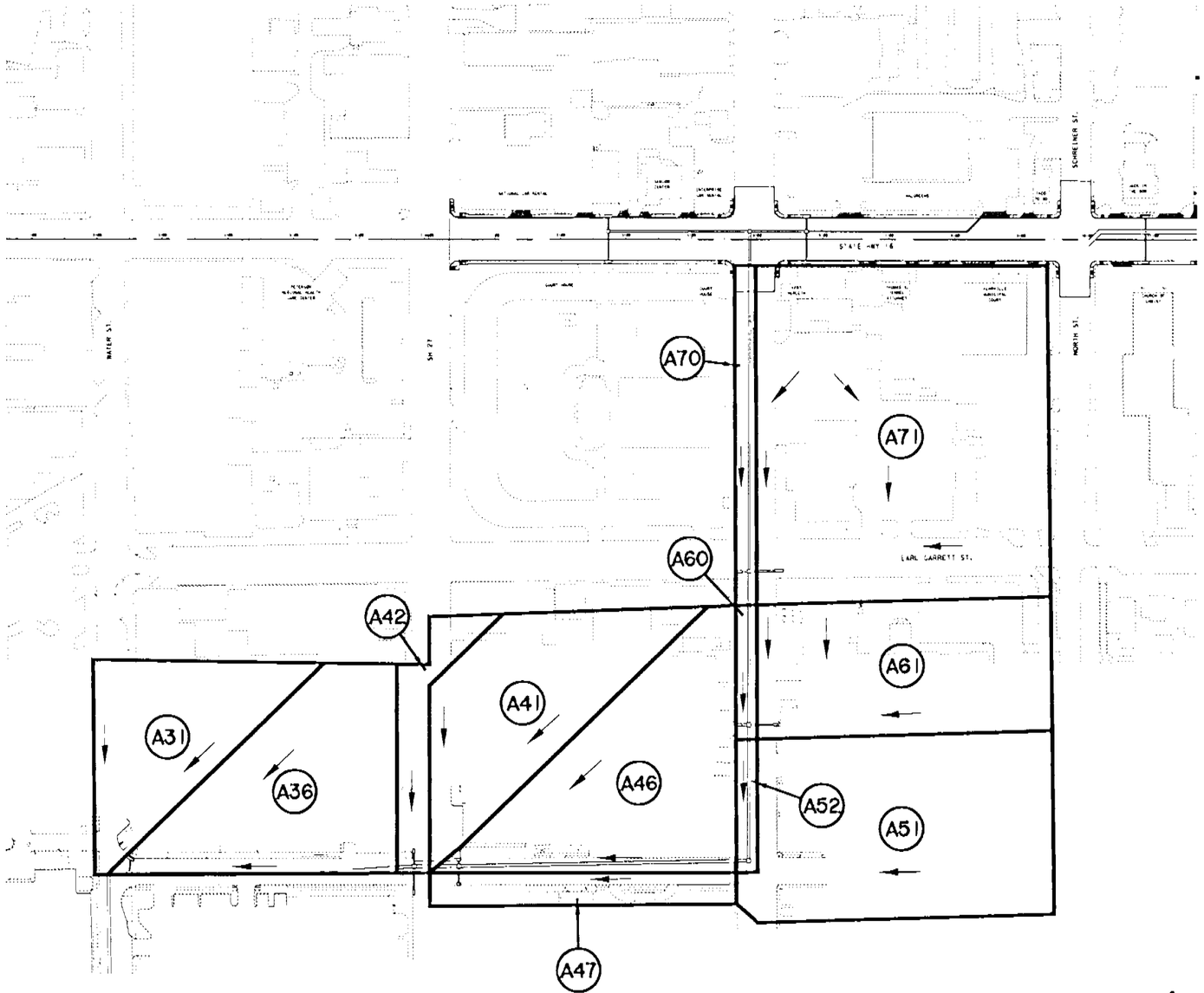

SCALE: 1" = 200'

LEGEND

- (A15) DRAINAGE AREAS
- DRAINAGE AREA BOUNDARIES
- [4] PROPOSED CULVERT
- DRAINAGE FLOW ARROW

Discharge for Individual Areas							
No.	Comp Area	Comp C	Tc Used	I_{10} in/hr	Q_{10} cfs	I_{25} in/hr	Q_{25} cfs
A31	0.15	0.95	10	7.58	1.079	8.82	11.847
A36	3.319	0.95	10	7.58	23.905	8.82	17.189
A41	1.816	0.95	10	7.58	13.084	8.82	15.214
A42	0.507	0.95	10	7.58	3.652	8.82	4.247
A46	2.366	0.95	10	7.58	17.045	8.82	19.819
A47	0.533	0.95	10	7.58	3.843	8.82	4.468
A51	2.947	0.85	10	7.58	18.995	8.82	22.087
A52	0.15	0.95	13.3	7.58	1.082	8.82	1.258
A60	0.152	0.95	10	7.58	1.095	8.82	1.273
A61	2.117	0.85	10	7.58	13.642	8.82	15.863
A70	0.384	0.95	10	7.58	2.765	8.82	3.215
A71	5.237	0.85	10	7.58	33.752	8.82	39.246

STATE OF TEXAS
TOM C. BAILEY, JR.
54993
REGISTERED PROFESSIONAL ENGINEER

THE SEAL APPEARING ON THIS DOCUMENT WAS AUTHORIZED BY TOM C. BAILEY, P.E. 54993 ON 12/21/2004

SYSTEM A INTERIOR DRAINAGE AREA MAP SHEET 1 OF 1

MAESTAS & BAILEY, INC.
518 E. RAMSEY, SUITE 204
SAN ANTONIO, TEXAS 78216
(210)366-1988 (210)366-1980 FAX

Texas Department of Transportation
© 2004

FED.RD. DIV.NO.	FEDERAL AID PROJECT NO.		SHEET NO.
6			5
STATE	DIST.	COUNTY	
TX	SAT	KERR	
CONT.	SECT.	JOB	HIGHWAY NO.
0291	02	030	STATE HWY. 16

Z:\PROJECTS\SH16 Kerrvi.le\Drainage\sheets\1006-idam-A-01.dgn
12/21/2004
02:12:16 PM

CONVEYANCE

U.S. Node	D.S. Node	Actual Length	Hyd. Length	N Value	Slope	No. Bls	Span	Rise	Fs	Sof U.S.	Sof D.S.	Inv U.S.	Inv D.S.	Unif. Dep	Unif. Vel.	Act. Vel. D.S.	Act. Dep U.S.	Act. Dep D.S.	HGL U.S.	HGL D.S.	EGL U.S.	EGL D.S.	Sum Tc	Sum Q	Sum Area	Avg C Value	Rain I
A20	A10	234.68	237.18	0.012	0.439	1	n/a	5	0	1623.03	1622.00	1618.03	1617.00	3.81	10.92	8.94	4.74	5.00	1622.77	1622.00	1624.07	1623.24	14.98	175.45	26.29	0.90	7.42
A30	A20	279.21	284.21	0.012	0.344	1	n/a	4.5	0.01	1623.73	1622.77	1619.23	1618.27	4.50	11.32	11.03	4.50	4.50	1624.36	1622.77	1626.25	1624.07	14.56	175.45	26.29	0.90	7.42
A35	A30	27.39	32.39	0.012	0.511	1	n/a	4.5	0.01	1623.87	1623.73	1619.37	1619.23	4.50	10.69	10.42	4.50	4.50	1624.76	1624.36	1626.44	1626.25	14.51	165.76	24.88	0.90	7.43
A38	A35	290.34	295.34	0.012	0.441	1	n/a	4.5	0	1625.15	1623.87	1620.65	1619.37	4.50	10.01	9.75	4.50	4.50	1626.53	1624.76	1628.01	1626.44	14.02	155.10	22.82	0.89	7.62
A40	A38	119.62	124.62	0.012	0.35	1	n/a	4.5	0	1625.57	1625.15	1621.07	1620.65	4.50	10.05	9.80	4.50	4.50	1627.97	1627.30	1629.46	1628.79	13.65	155.81	22.82	0.89	7.66
A45	A40	79.43	84.43	0.012	0.40	1	n/a	4	0.01	1625.39	1625.07	1621.39	1621.07	4.00	11.39	11.10	4.00	4.00	1628.22	1627.97	1630.14	1629.46	13.53	139.52	20.50	0.89	7.69
A52	A45	415.04	420.54	0.012	0.45	1	n/a	4.5	0	1627.85	1625.97	1623.35	1621.47	3.17	10.09	7.59	4.50	4.50	1629.50	1627.86	1630.40	1629.04	12.96	120.78	17.60	0.88	7.85
A50	A52	15.90	21.40	0.012	0.253	1	n/a	3.5	0.01	1626.93	1626.89	1623.43	1623.39	3.50	10.86	10.58	3.50	3.50	1631.14	1631.24	1632.88	1632.69	12.79	101.83	14.50	0.88	7.99
A59	A50	203.68	208.68	0.012	0.432	1	n/a	4	0	1628.31	1627.43	1624.31	1623.43	3.29	9.20	8.08	4.00	4.00	1630.36	1629.47	1631.38	1630.49	12.54	101.56	14.50	0.88	7.97
B10	A59	268.53	273.03	0.012	0.42	1	n/a	3.5	0.01	1628.94	1627.81	1625.44	1624.31	3.50	9.37	9.14	3.50	3.50	1635.18	1632.96	1636.48	1634.70	11.98	87.89	12.24	0.88	8.14
B20	B10	479.94	483.94	0.012	0.04	1	n/a	3	0	1630.50	1630.31	1627.50	1627.31	3.00	7.38	7.19	3.00	3.00	1638.07	1635.18	1638.87	1636.48	10.89	50.83	6.62	0.91	8.50
A31	A30	9.41	11.91	0.012	0.001	1	n/a	2	0	1620.03	1620.03	1618.03	1618.03	2.00	3.87	5.81	1.90	1.24	1619.94	1619.27	1619.94	1626.25	10.00	11.85	1.41	0.95	8.82
A36	A35	20.03	22.53	0.012	3.095	1	n/a	2	0.03	1622.00	1621.38	1620.00	1619.38	0.88	12.95	5.47	2.00	2.00	1626.09	1624.76	1626.55	1626.44	10.00	17.19	2.05	0.95	8.82
A41	A40	17.90	23.40	0.012	4.302	1	n/a	2	0.04	1624.00	1623.23	1622.00	1621.23	0.75	14.14	4.84	2.00	2.00	1628.48	1627.28	1628.84	1628.75	10.00	15.21	1.82	0.95	8.82
A42	A40	34.08	39.58	0.012	2.259	1	n/a	2	0.02	1624.00	1623.23	1622.00	1621.23	0.46	7.82	1.35	2.00	2.00	1628.74	1627.28	1628.77	1628.75	10.00	4.25	0.51	0.95	8.82
A46	A45	7.43	9.93	0.012	7.135	1	n/a	2	0.07	1624.00	1623.47	1622.00	1621.47	0.75	18.26	6.31	2.00	2.00	1628.49	1627.86	1629.11	1629.04	10.00	19.82	2.37	0.95	8.82
A47	A45	25.15	27.65	0.012	2.107	1	n/a	2	0.02	1624.00	1623.47	1622.00	1621.47	0.48	7.74	1.42	2.00	2.00	1629.02	1627.86	1629.05	1629.04	10.00	4.47	0.53	0.95	8.82
A51	A52	31.23	33.94	0.012	2.08	1	n/a	2	0.02	1628.00	1627.35	1626.00	1625.35	1.15	11.87	7.03	2.00	2.00	1632.20	1631.24	1632.97	1632.69	10.00	22.09	2.95	0.85	8.82
A60	A59	8.50	14.00	0.012	2.236	1	n/a	2	0.02	1626.50	1626.31	1624.50	1624.31	0.22	5.05	0.13	3.50	3.50	1631.38	1630.36	1631.38	1631.38	10.00	1.27	0.15	0.95	8.82
A61	A59	38.33	40.83	0.012	0.496	1	n/a	2	0.01	1626.50	1626.31	1624.50	1624.31	1.51	6.23	5.05	2.00	2.00	1631.15	1630.36	1631.55	1631.38	10.00	15.86	2.12	0.85	8.82
A70	B10	5.55	10.55	0.012	1.08	1	n/a	2.5	0.01	1628.00	1627.94	1625.50	1625.44	0.45	5.41	0.65	2.50	2.50	1636.47	1635.18	1636.48	1636.48	10.00	3.21	0.38	0.95	8.82
A71	B10	40.49	42.49	0.012	0.40	1	n/a	2.5	0.01	1628.10	1627.94	1625.60	1625.44	2.50	8.20	8.00	2.50	2.50	1635.82	1635.18	1636.81	1636.48	10.00	39.25	5.24	0.85	8.82

INLET HYDRAULICS

ID	Station	Type	Profile Type	Q	Cap	By Pass Flow	By Pass Flow Into	By Pass Node ID	Inlet Curb Length	Inlet Length Rqrd	Computed Ponded Width	Computed Ponded Depth	St slope	gutter Depth
A31	29+44.34	Grate	Sag	10.188	10.188				n/a	n/a	0.5	0.01	n/a	
A36	29+10.94	Grate	Sag	14.783	14.783				n/a	n/a	4	0.08	n/a	
A41	19+51.08	Grate	Sag	13.084	13.084				n/a	n/a	5	0.1	n/a	
A42	24+79.68	Grate	Sag	3.652	3.652				n/a	n/a	0.5	0.01	n/a	
A46	24+07.76	Grate	Sag	17.045	17.045				n/a	n/a	8.5	0.17	n/a	
A47	24+08.72	Grate	Sag	3.843	3.843				n/a	n/a	0.5	0.01	n/a	
A51	19+88.14	Grate	Sag	18.995	18.995				n/a	n/a	2.5	0.05	n/a	
A52	19+87.05	Grate	Sag	1.082	1.082				n/a	n/a	0.5	0.01	n/a	
A60	17+57.10	Grate	Sag	1.095	1.095				n/a	n/a	0.5	0.01	n/a	
A61	17+56.57	Grate	Sag	13.642	13.642				n/a	n/a	5.5	0.11	n/a	
A70	14+83.50	Grate	Sag	2.765	2.765				n/a	n/a	0.5	0.01	n/a	
A71	14+74.81	Grate	Sag	33.752	33.752				n/a	n/a	8	0.16	n/a	

DISCHARGE

No.	Comp Area	Comp C	Tc Used	Discharge for Individual Areas: I10 in/hr	Q10 cfs	I25 in/hr	Q25 cfs
A31	0.15	0.95	10	7.583	1.079	8.817	11.847
A36	3.319	0.95	10	7.583	23.91	8.817	17.189
A41	1.816	0.95	10	7.583	13.08	8.817	15.214
A42	0.507	0.95	10	7.583	3.652	8.817	4.247
A46	2.366	0.95	10	7.583	17.05	8.817	19.819
A47	0.533	0.95	10	7.583	3.843	8.817	4.468
A51	2.947	0.85	10	7.583	19	8.817	22.087
A52	0.15	0.95	13.3	7.583	1.082	8.817	1.258
A60	0.152	0.95	10	7.583	1.095	8.817	1.273
A61	2.117	0.85	10	7.583	13.64	8.817	15.863
A70	0.384	0.95	10	7.583	2.765	8.817	3.215
A71	5.237	0.85	10	7.583	33.75	8.817	39.246

INLET CONFIGURATION

Inlet - ID	Node - Station	Offset	TC Elev.	Inlet - Type	Inlet - Profile Type	Inlet - Spread Slope	Inlet - Curb Length	Inlet - Curb Dep.	Inlet - Curb Height	Curb Dep. Width	Max Ponded Width	Max Ponded Depth	Grate Type	Grate Length	Grate Width	Grate Area	Grate Perimeter	Grate Clog Area
A31	29+44.34	11.91	1634.61	Grate	Sag		n/a	n/a	n/a	n/a	15.00	0.50	Parallel 1 1/8	6.00	2.50	15.00	17.00	0.50
A36	29+10.94	22.48	1634.24	Grate	Sag	0.02	n/a	n/a	n/a	n/a	15.00	0.50	Parallel 1 1/8	12.00	2.50	25.00	29.00	0.50
A41	24+77.06	23.43	1632.42	Grate	Sag		n/a	n/a	n/a	n/a	15.00	0.50	Parallel 1 1/8	6.00	2.50	15.00	17.00	0.50
A42	24+79.68	-39.44	1632.05	Grate	Sag		n/a	n/a	n/a	n/a	15.00	0.50	Parallel 1 1/8	6.00	2.50	15.00	17.00	0.50
A46	24+07.76	9.99	1632.66	Grate	Sag		n/a	n/a	n/a	n/a	15.00	0.50	Parallel 1 1/8	6.00	2.50	15.00	17.00	0.50
A47	24+08.72	-27.56	1632.18	Grate	Sag		n/a	n/a	n/a	n/a	15.00	0.50	Parallel 1 1/8	6.00	2.50	15.00	17.00	0.50
A51	19+88.14	-33.93	1636.83	Grate	Sag		n/a	n/a	n/a	n/a	15.00	0.50	Parallel 1 1/8	12.00	2.50	25.00	29.00	0.50
A52	19+87.05	0.00	1636.83	Grate	Sag		n/a	n/a	n/a	n/a	15.00	0.50	Parallel 1 1/8	6.00	2.50	15.00	17.00	0.50
A60	17+57.10	14.00	1635.60	Grate	Sag		n/a	n/a	n/a	n/a	15.00	0.50	Parallel 1 1/8	6.00	2.50	15.00	17.00	0.50
A61	17+56.57	-40.83	1635.63	Grate	Sag		n/a	n/a	n/a	n/a	15.00	0.50	Parallel 1 1/8	6.00	2.50	15.00	17.00	0.50
A70	14+83.50	10.50	1637.10	Grate	Sag		n/a	n/a	n/a	n/a	15.00	0.50	Parallel 1 1/8	6.00	2.50	15.00	17.00	0.50
A71	14+74.81	-41.48	1637.18	Grate	Sag		n/a	n/a	n/a	n/a	15.00	0.50	Parallel 1 1/8	12.00	2.50	25.00	29.00	0.50

INLETS DESIGNED FOR Q10 & PIPES
DESIGNED FOR Q25

STORM SEWER CALCULATION PERFORMED
IN GEOPAK 2000 DRAINAGE

STATE OF TEXAS
TOM C. BAILEY, JR.
54993
REGISTERED
PROFESSIONAL ENGINEER

THE SEAL APPEARING ON THIS DOCUMENT WAS AUTHORIZED BY TOM C. BAILEY, P.E. 54993 ON 12/21/2004

HYDRAULIC COMPUTATION SYSTEM A
SHEET 1 OF 1

MAESTAS & BAILEY, INC.
518 E. RAMSEY, SUITE 204
SAN ANTONIO, TEXAS 78216
(210)366-1988 (210)366-1980 FAX

Texas Department of Transportation © 2004

FEDRD. DIV.NO.	FEDERAL AID PROJECT NO.		SHEET NO.
6			6
STATE	DIST.	COUNTY	
TX	SAT	KERR	
CONT.	SECT.	JOB	HIGHWAY NO.
0291	02	030	STATE HWY. 16

Z:\PROJECTS\SHIE Kerrville\Drainage\sheets\1006-hyd-comp-A-1.dgn
12/21/2004
02:11:01 PM

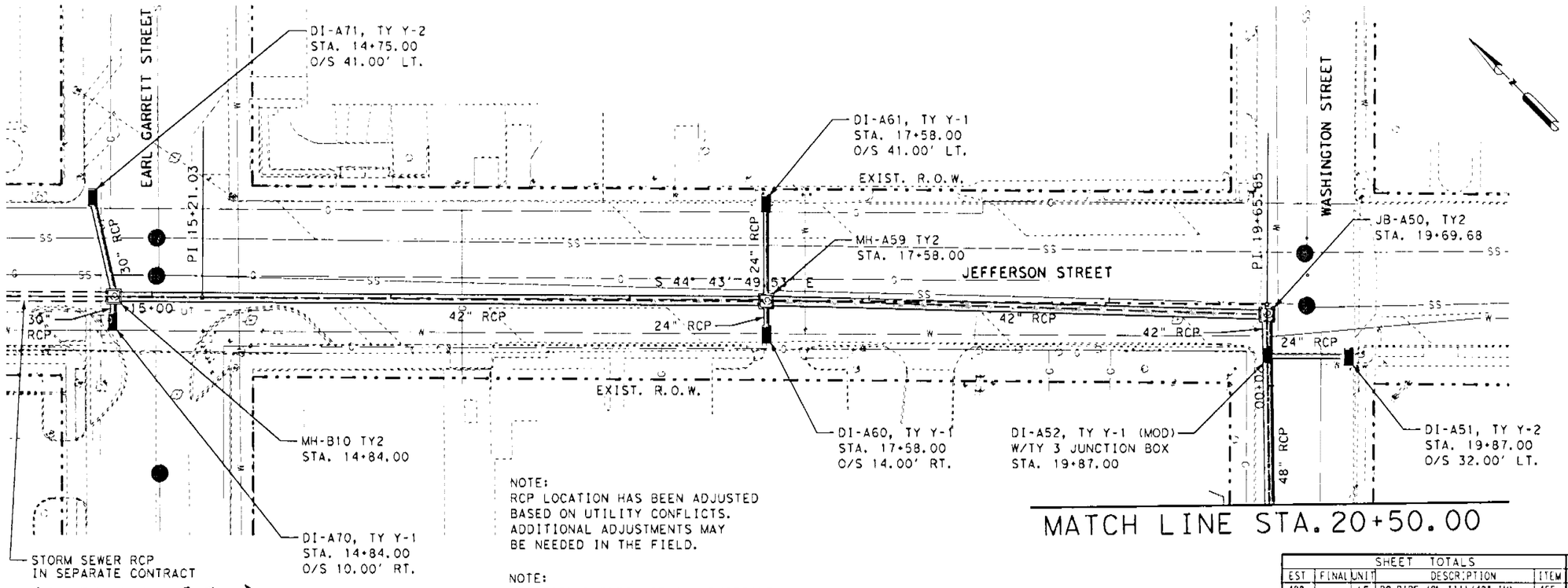

NOTE:
RCP LOCATION HAS BEEN ADJUSTED BASED ON UTILITY CONFLICTS. ADDITIONAL ADJUSTMENTS MAY BE NEEDED IN THE FIELD.

NOTE:
LOCATION & DEPTH OF ALL EXISTING UTILITIES ARE APPROXIMATE ONLY. CONTRACTOR SHALL VERIFY THE LOCATION (HORIZONTAL & VERTICAL) OF THE UTILITIES PRIOR TO CONSTRUCTION.

STATE OF TEXAS
JAIME A. VELA, JR.
92045
LICENSED
PROFESSIONAL ENGINEER

The seal appearing on this document was authorized by JAIME A. VELA, JR. P.E. 92045, on Dec 29, 2004

Jaime A. Vela Jr., P.E.

SHEET TOTALS					SHEET TOTALS				
EST	FINAL	UNIT	DESCRIPTION	ITEM	EST	FINAL	UNIT	DESCRIPTION	ITEM
488		LF	RC PIPE (CL III)(42" IN)	465	534		SY	CUT & RESTORING PAV	400
					680		LF	TRENCH EXCAVATION PROTECTION	402
					79		LF	RC PIPE (CL III)(24 IN)	464
					40		LF	RC PIPE (CL III)(30 IN)	464
					63		LF	RC PIPE (CL III)(48 IN)	464
					3		EA	INLET (COMPL)(TY Y-1)	465
					1		EA	MANH (COMPL)(JCT BOX)(TY2)	465
					2		EA	MANH (COMPL)(TY2)	465
					2		EA	INLET (COMPL)(TY Y-2)	465
					1		EA	INLET (COMPL)(TY Y-1)(MOD)	465

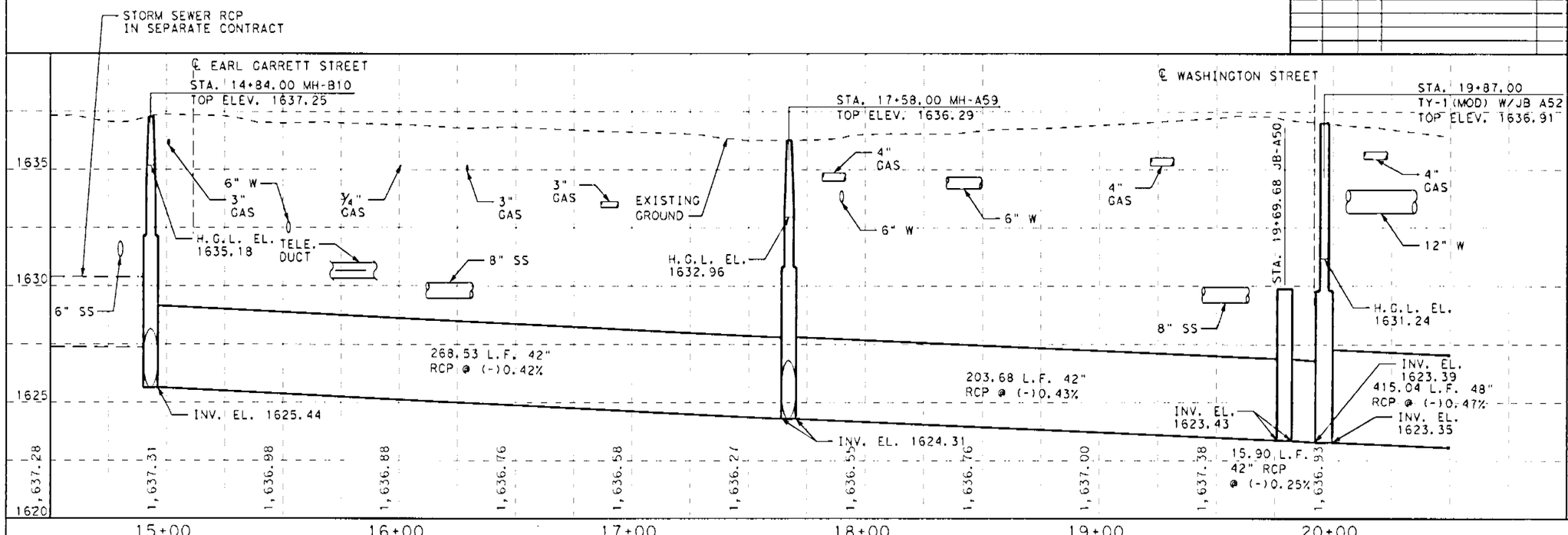

BENCHMARK

SCALE:
PLAN 1"=50' HORZ.
PROFILE 1"= 5' VERT.
LINEAR DIMENSIONS ARE IN FEET UNLESS SHOWN OTHERWISE.

S&B INFRASTRUCTURE, LTD.
Engineering Management Technology

CITY OF KERRVILLE

SYSTEM "A"
DRAINAGE LAYOUT
STA. 15+00.00 TO STA. 20+50.00

SHEET NO. 7

SHEET 1 OF 4 SHEETS

DESIGNED BY:	CHECKED BY:	DATE:
DRAWN BY:	CHECKED BY:	DATE:
APPROVED BY:	DATE:	PROJECT NO: 943290

N:\austin\Project\U943290\DGN\xxxxxss02.dgn

12/29/2004

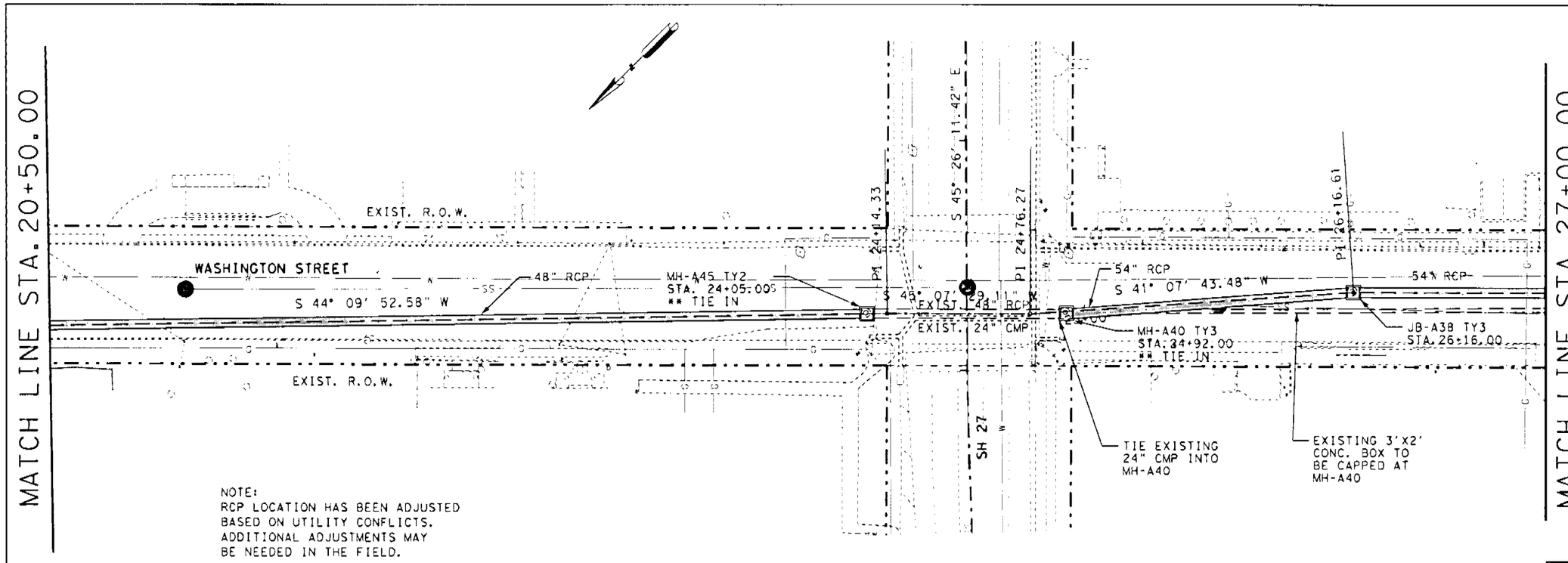

NOTE:
RCP LOCATION HAS BEEN ADJUSTED BASED ON UTILITY CONFLICTS. ADDITIONAL ADJUSTMENTS MAY BE NEEDED IN THE FIELD.

NOTE:
LOCATION & DEPTH OF ALL EXISTING UTILITIES ARE APPROXIMATE ONLY. CONTRACTOR SHALL VERIFY THE LOCATION (HORIZONTAL & VERTICAL) OF THE UTILITIES PRIOR TO CONSTRUCTION.

** TIE INTO EXISTING 48" RCP

STATE OF TEXAS
JAIME A. VELA, JR.
92045
LICENSED
PROFESSIONAL ENGINEER

The seal appearing on this document was authorized by JAIME A. VELA, JR. P.E. 92045, on Dec. 29, 2004

Jaime A. Vela, Jr., P.E.

SHEET TOTALS

EST	FINAL	UNIT	DESCRIPTION	ITEM
554		SY	CUT & RESTORING PAV	400
563		LF	TRENCH EXCAVATION PROTECTION	402
352		LF	RC PIPE (CL III)(48 IN)	465
199		LF	RC PIPE (CL III)(54 IN)	464
1		EA	MANH (COMPL)(TY 2)	465
1		EA	MANH (COMPL)(TY 3)	465
1		EA	MANH (COMPL)(JCT BOX)(TY 3)	465

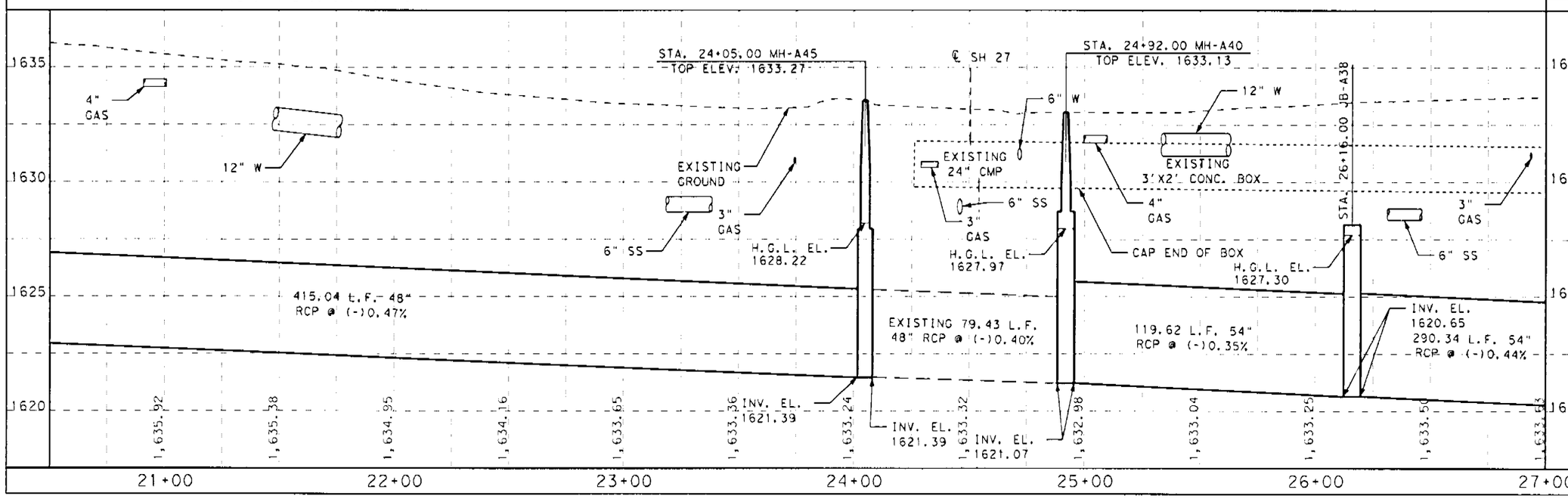

BENCHMARK

SCALE:
PLAN 1"=50' HORZ.
PROFILE 1"= 5' VERT.
LINEAR DIMENSIONS ARE IN FEET UNLESS SHOWN OTHERWISE.

S&B INFRASTRUCTURE, LTD.
Engineering Management Technology

CITY OF KERRVILLE

SYSTEM "A"
DRAINAGE LAYOUT
STA. 20+50.00 TO STA. 27+00.00

SHEET NO. 8

SHEET 2 OF 4 SHEETS

DESIGNED BY:	CHECKED BY:	DATE:
DRAWN BY:	CHECKED BY:	DATE:
APPROVED BY:	DATE:	PROJECT NO: 9432900

N:\Austin\Project\U9432900\DGN\xxxxxss03.dgn
12/29/2004

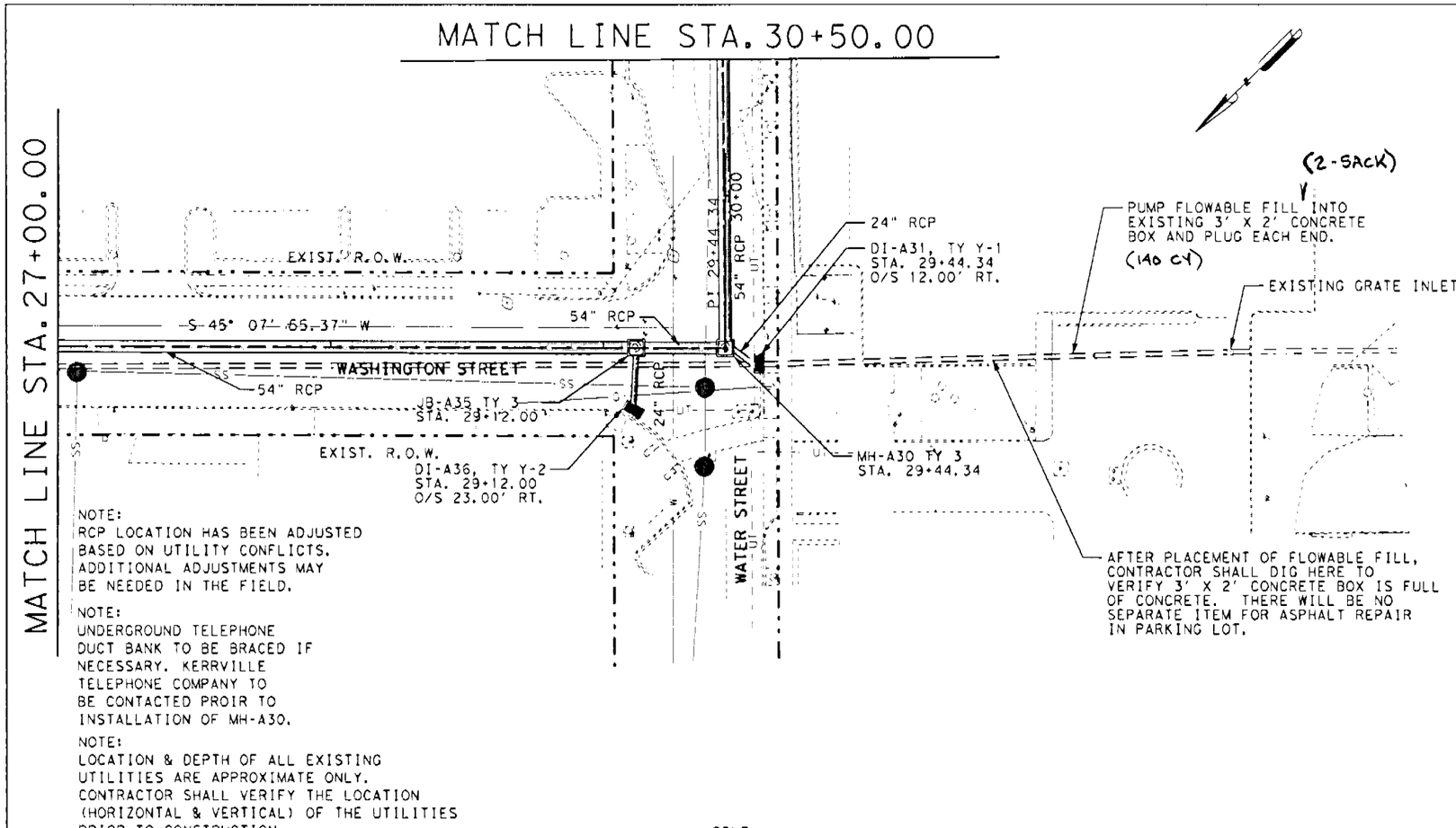

NOTE:
RCP LOCATION HAS BEEN ADJUSTED BASED ON UTILITY CONFLICTS. ADDITIONAL ADJUSTMENTS MAY BE NEEDED IN THE FIELD.

NOTE:
UNDERGROUND TELEPHONE DUCT BANK TO BE BRACED IF NECESSARY. KERRVILLE TELEPHONE COMPANY TO BE CONTACTED PROIR TO INSTALLATION OF MH-A30.

NOTE:
LOCATION & DEPTH OF ALL EXISTING UTILITIES ARE APPROXIMATE ONLY. CONTRACTOR SHALL VERIFY THE LOCATION (HORIZONTAL & VERTICAL) OF THE UTILITIES PRIOR TO CONSTRUCTION.

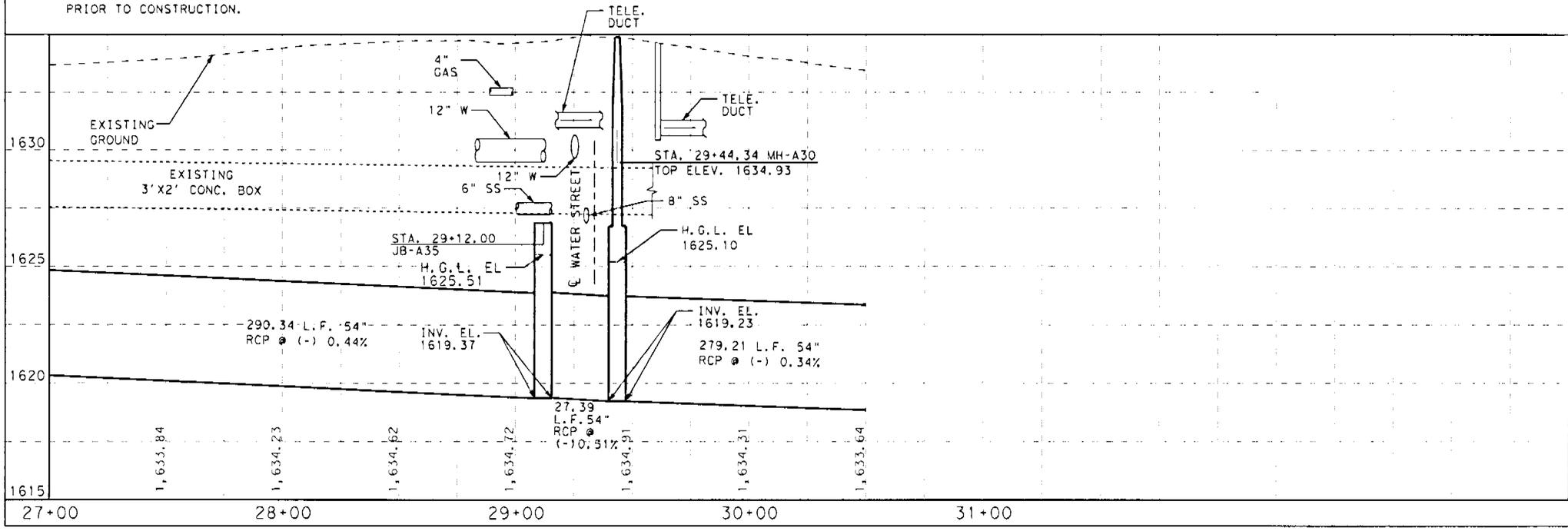

STATE OF TEXAS
JAIME A. VELA, JR.
92045
LICENSED
PROFESSIONAL ENGINEER

The seal appearing on this document was authorized by JAIME A. VELA, JR. P.E. 92045, on Dec. 29, 2004

Jaime A. Vela, Jr., P.E.

SHEET TOTALS

EST	FINAL	UNIT	DESCRIPTION	ITEM
370		SY	CUT & RESTORING PAV	400
350		LF	TRENCH EXCAVATION PROTECTION	402
38		LF	RC PIPE (CL III)(24 IN)	464
335		LF	RC PIPE (CL III)(54 IN)	464
1		EA	INLET (COMPL)(TY Y-1)	465
1		EA	INLET (COMPL)(TY Y-2)	465
1		EA	MANH (COMPL)(TY 3)	465
1		EA	MANH (COMPL)(JCT BOX)(TY 3)	465

BENCHMARK

SCALE:
PLAN 1"=50' HORZ.
PROFILE 1"= 5' VERT.
LINEAR DIMENSIONS ARE IN FEET UNLESS SHOWN OTHERWISE.

S&R INFRASTRUCTURE LTD.
Engineering Management Technology

CITY OF KERRVILLE

SYSTEM "A"
DRAINAGE LAYOUT
STA. 27+00.00 TO STA. 30+50.00

SHEET 3 OF 4 SHEETS

SHEET NO. 9

DESIGNED BY:	CHECKED BY:	DATE:
DRAWN BY:	CHECKED BY:	DATE:
APPROVED BY:	DATE:	PROJECT NO. U943290

N:\Austin\Project\U943290\DGN\xxxxxss04.dgn

12/29/2004

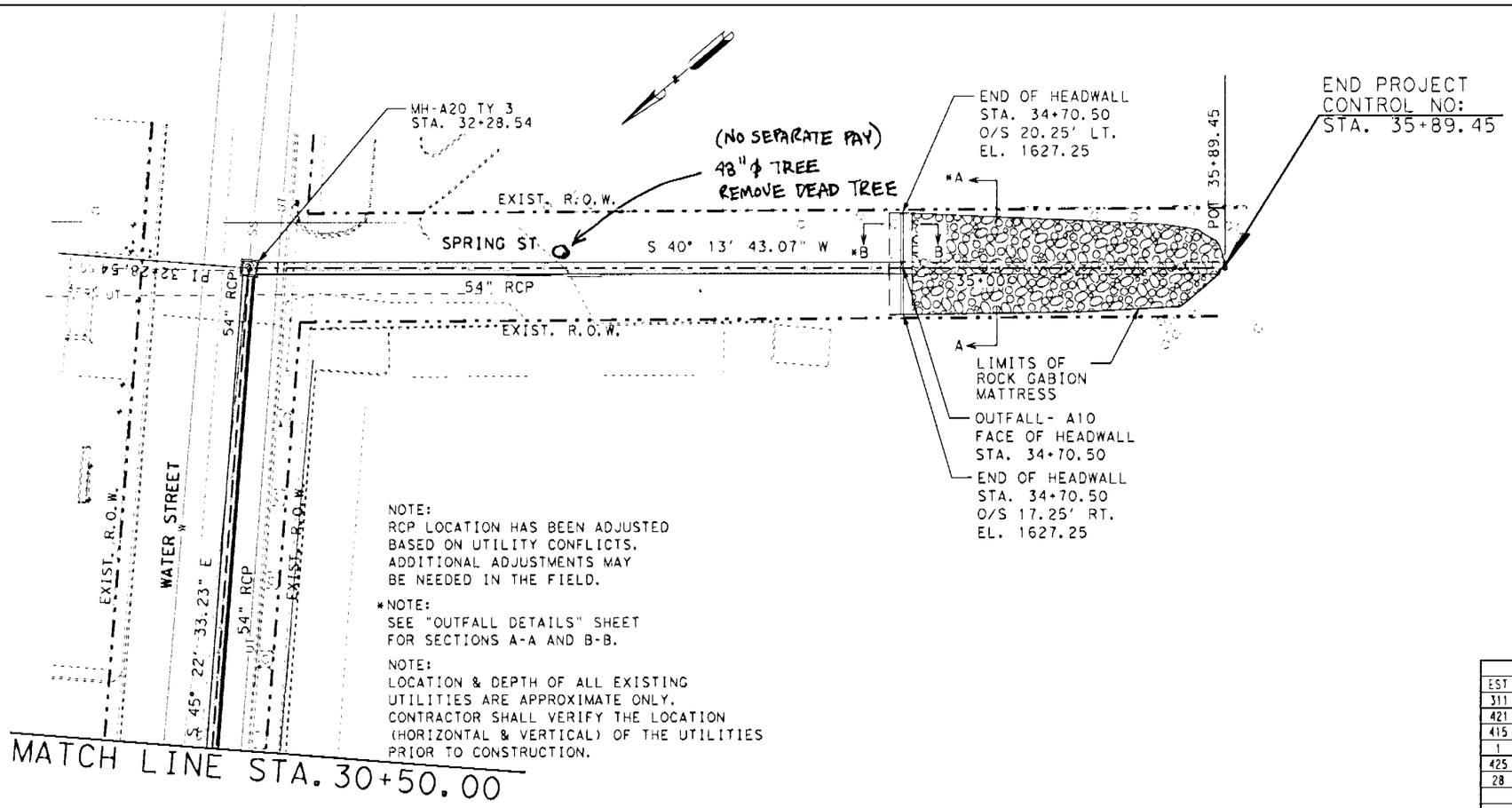

NOTE:
RCP LOCATION HAS BEEN ADJUSTED BASED ON UTILITY CONFLICTS. ADDITIONAL ADJUSTMENTS MAY BE NEEDED IN THE FIELD.

*NOTE:
SEE "OUTFALL DETAILS" SHEET FOR SECTIONS A-A AND B-B.

NOTE:
LOCATION & DEPTH OF ALL EXISTING UTILITIES ARE APPROXIMATE ONLY. CONTRACTOR SHALL VERIFY THE LOCATION (HORIZONTAL & VERTICAL) OF THE UTILITIES PRIOR TO CONSTRUCTION.

STATE OF TEXAS
JAIME A. VELA, JR.
92045
LICENSED
PROFESSIONAL ENGINEER

The seal appearing on this document was authorized by JAIME A. VELA, JR. P.E. 92045, on Dec. 29, 2004

Jaime A. Vela Jr., P.E.

SHEET TOTALS

EST	FINAL	UNIT	DESCRIPTION	ITEM
311		SY	CUT & RESTORING PAV	400
421		LF	TRENCH EXCAVATION PROTECTION	402
415		LF	RC PIPE (CL III) (54 IN)	464
1		EA	MANH (COMPL) (TY 3)	465
425		SY	GABION MATTRESS (GALV) (18IN)	459
28		CY	CL C CONC (RETAINING WALL)	420

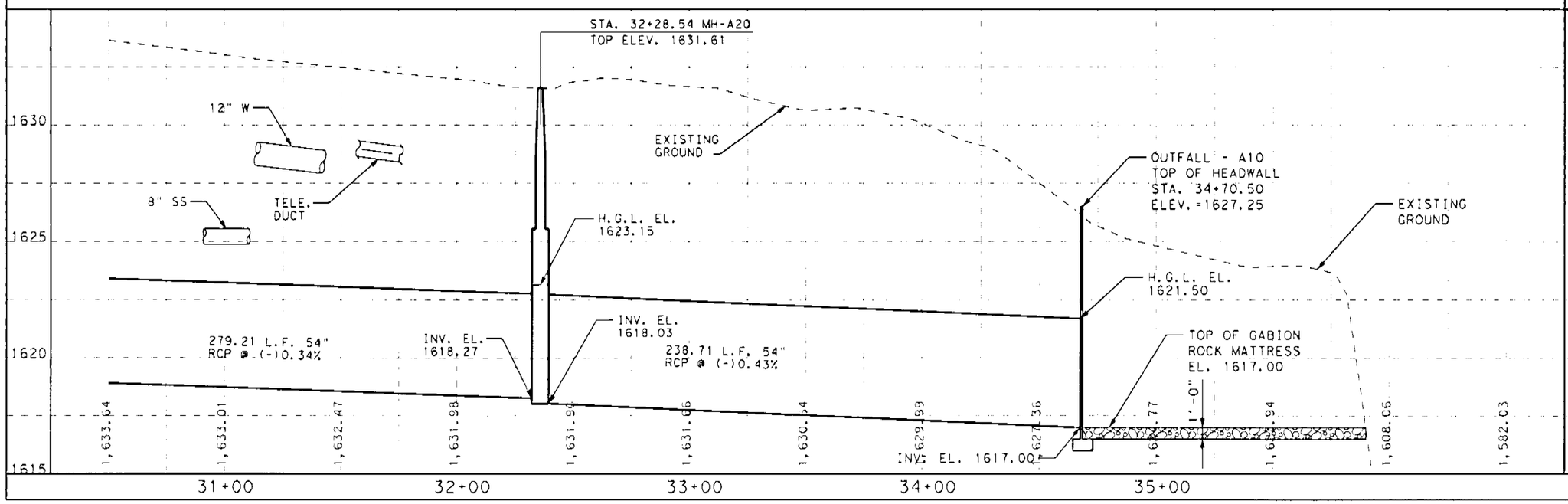

BENCHMARK

SCALE:
PLAN 1"=50' HORZ.
PROFILE 1"= 5' VERT.
LINEAR DIMENSIONS ARE IN FEET UNLESS SHOWN OTHERWISE.

S&B INFRASTRUCTURE LTD.
Engineering Management Technology

CITY OF KERRVILLE

SYSTEM "A"
DRAINAGE LAYOUT
STA. 30+50.00 TO STA. 34+00.00

SHEET 4 OF 4 SHEETS

SHEET NO. 10

DESIGNED BY:	CHECKED BY:	DATE:
DRAWN BY:	CHECKED BY:	DATE:
APPROVED BY:	DATE:	PROJECT NO: 9432900

N:\Austin1\Project\U9432900\DGN\xxxxxxss05.dgn
12/29/2004

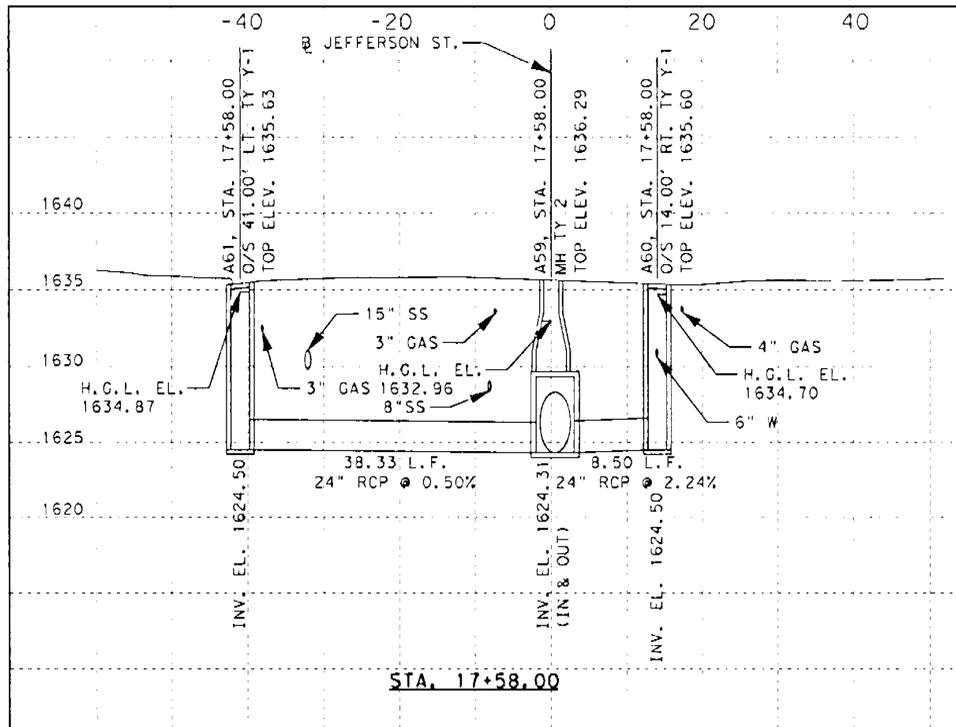

STA. 17+58.00

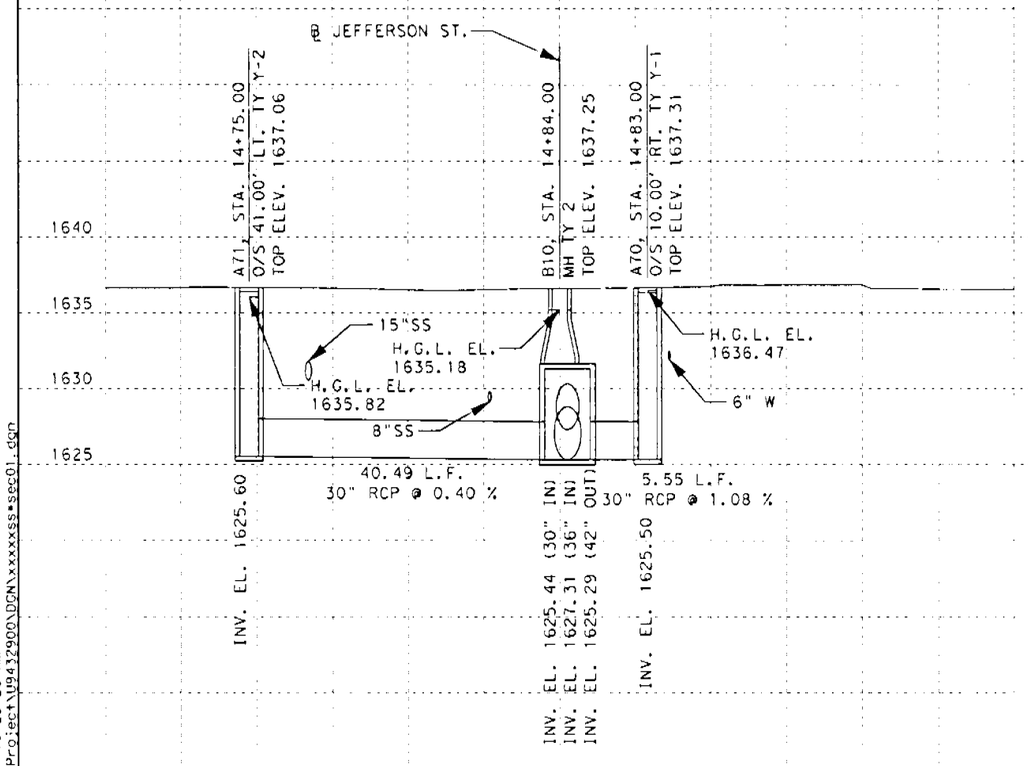

STA. 14+84.00

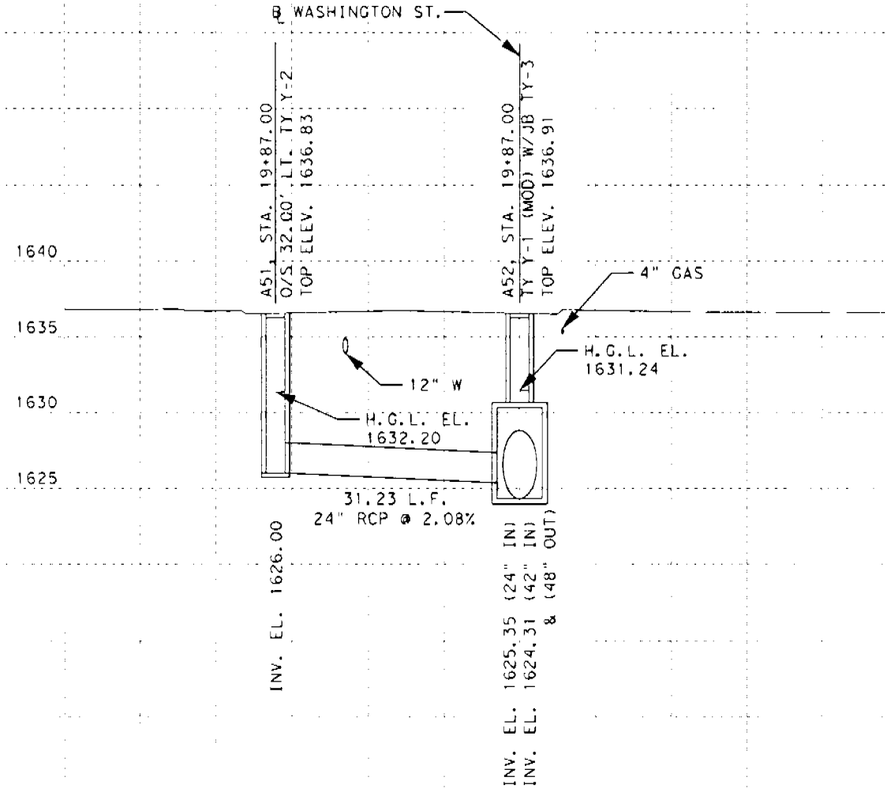

STA. 19+87.00

NOTE:

LOCATION & DEPTH OF ALL EXISTING UTILITIES ARE APPROXIMATE ONLY. CONTRACTOR SHALL VERIFY THE LOCATION (HORIZONTAL & VERTICAL) OF THE UTILITIES PRIOR TO CONSTRUCTION.

SCALE:
1"=20' HORZ.
1"=10' VERT.

STATE OF TEXAS
DOUGLAS R. HIVELY
86278
LICENSED PROFESSIONAL ENGINEER

The seal appearing on this document was authorized by DOUGLAS R. HIVELY P.E. 86278, on 12/29, 2004

S&B INFRASTRUCTURE LTD.
Engineering Management Technology

CITY OF KERRVILLE

SYSTEM "A"
DRAINAGE SECTIONS

SHEET 1 OF 2 SHEETS

DESIGNED BY:	CHECKED BY:	DATE:	SHEET NO. 11
DRAWN BY:	CHECKED BY:	DATE:	
APPROVED BY:	DATE:	PROJECT NO: 9432900	

12/29/2004 10:23:26 AM
N:\Austin1\Project\U9432900\DGN\xxxxxss*sec01.dgn

N:\Austin1\Project\U9432900\DGN\xxxxxss*sec01.dgn

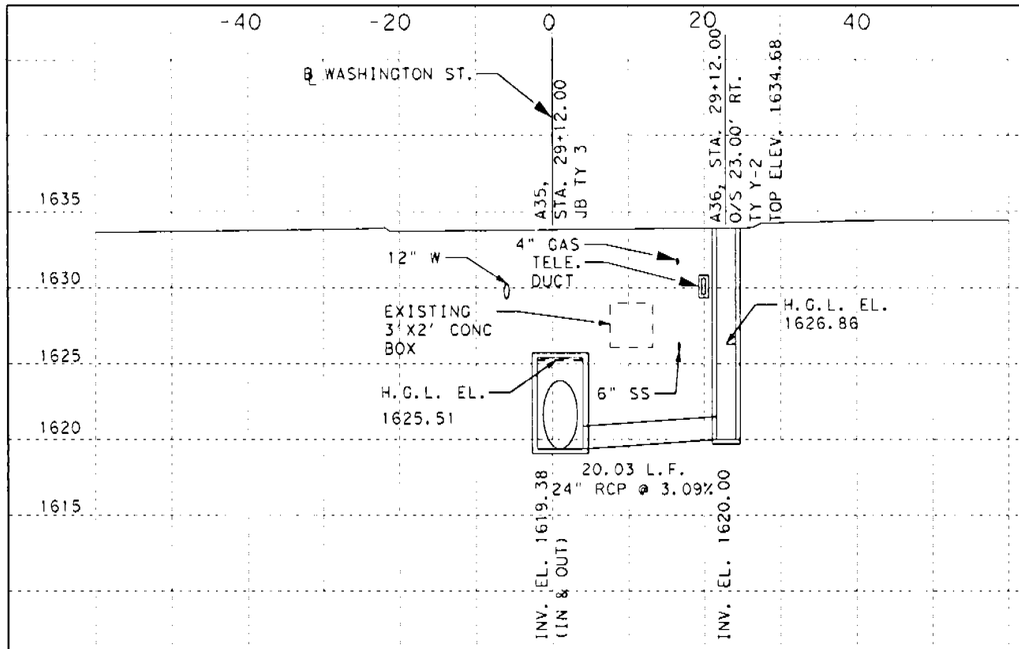

STA. 29+12.00

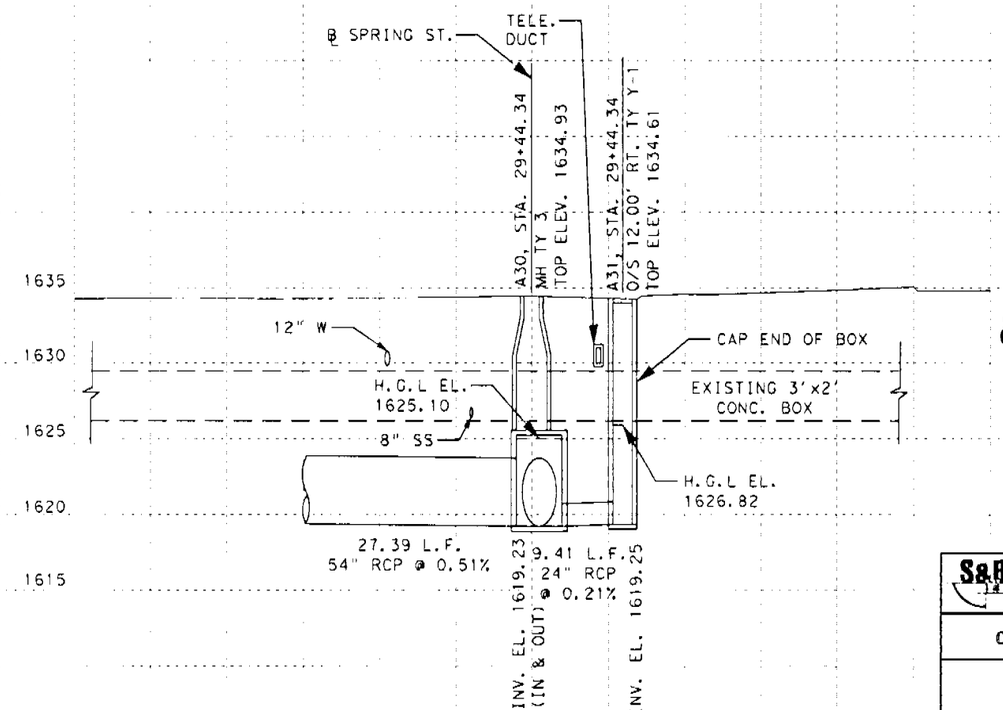

STA. 29+44.34

NOTE:

LOCATION & DEPTH OF ALL EXISTING UTILITIES ARE APPROXIMATE ONLY. CONTRACTOR SHALL VERIFY THE LOCATION (HORIZONTAL & VERTICAL) OF THE UTILITIES PRIOR TO CONSTRUCTION.

SCALE:
1"=20' HORZ.
1"=10' VERT.

STATE OF TEXAS
DOUGLAS R. HIVELY
86278
PROFESSIONAL ENGINEER

The seal appearing on this document was authorized by DOUGLAS R. HIVELY P.E. 86278, on 12/29, 2004

S&R INFRASTRUCTURE, LTD.
Engineering Management Technology

CITY OF KERRVILLE

SYSTEM "A"
DRAINAGE SECTIONS

SHEET NO. 12

SHEET 2 OF 2 SHEETS

DESIGNED BY:	CHECKED BY:	DATE:
DRAWN BY:	CHECKED BY:	DATE:
APPROVED BY:	DATE:	PROJECT NO: 9432900

12/29/2004 10:23:48 AM
N:\Austin1\Project\U9432900\DGN\xxxxxsss+sec02.dgn

N:\Austin1\Project\U9432900\DGN\xxxxxsss+sec02.dgn

GENERAL NOTES:

All reinforcing steel shall be Grade 60.
All concrete shall be Class "C".
The quantities for reinforcing steel on this sheet are for Contractor's information only.

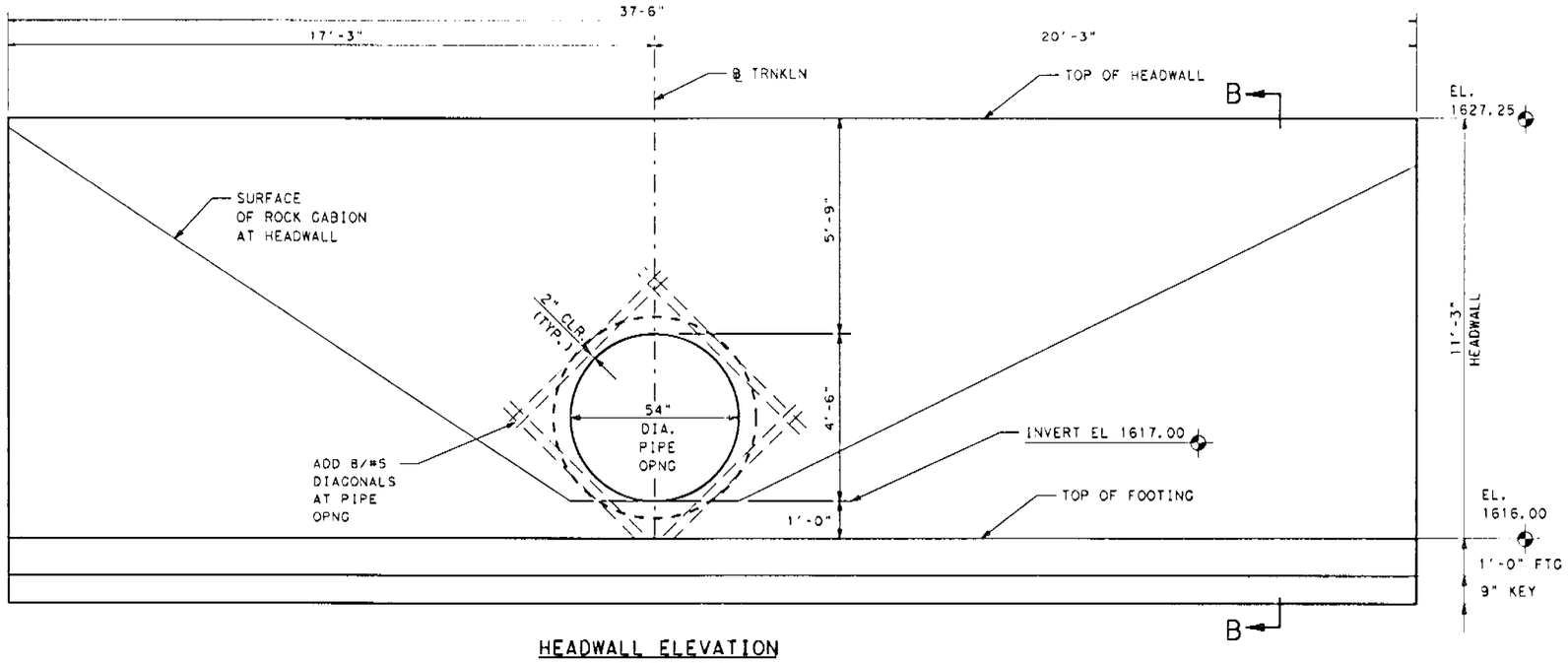

HEADWALL ELEVATION
(LOOKING BACKSTATION)

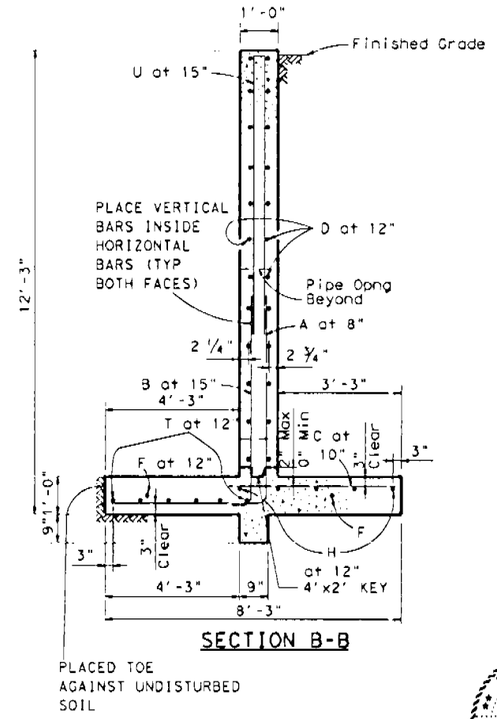

SECTION B-B

PLACED TOE AGAINST UNDISTURBED SOIL

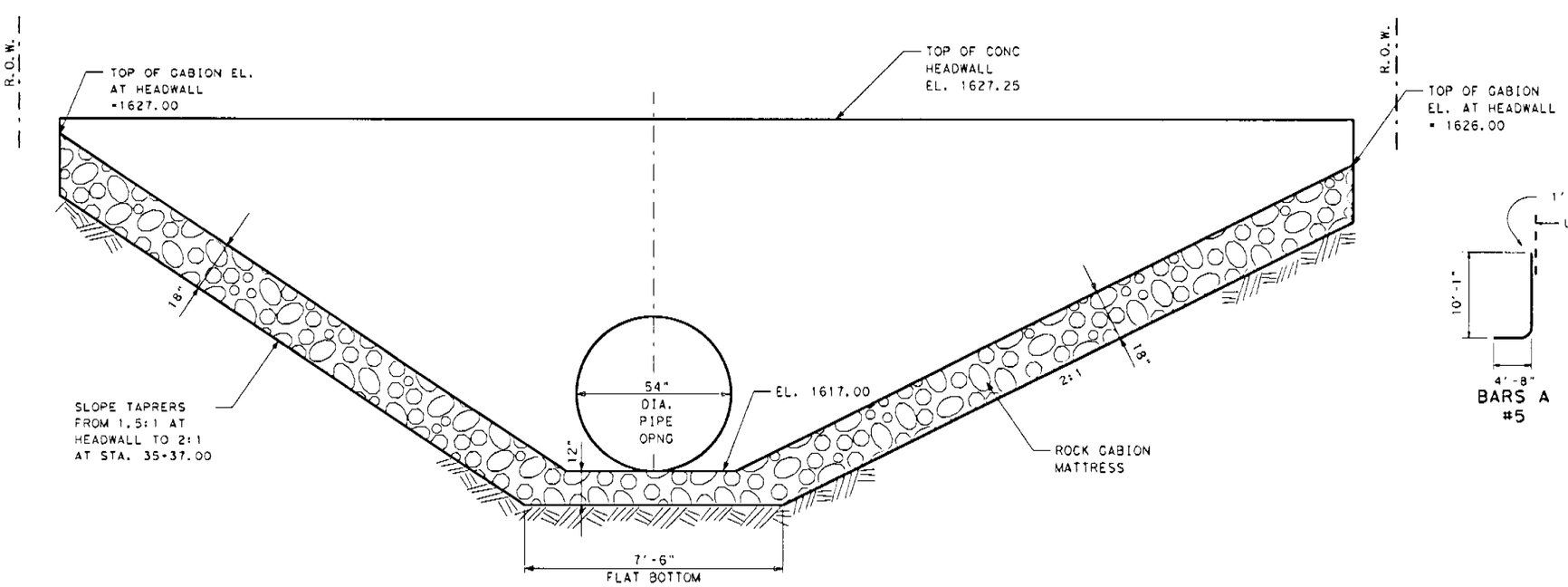

SECTION A-A
(LOOKING BACKSTATION)

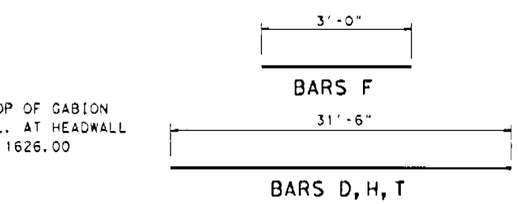

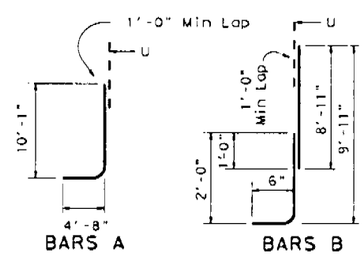

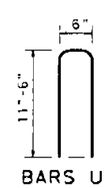

STATE OF TEXAS
DOUGLAS R. HIVELY
86278
PROFESSIONAL ENGINEER

The seal appearing on this document was authorized by DOUGLAS R. HIVELY P.E. 86278, on 12/29, 2004

LINEAR DIMENSIONS ARE IN FEET UNLESS SHOWN OTHERWISE.

S&R INFRASTRUCTURE LTD.
Engineering Management Technology

CITY OF KERRVILLE

SYSTEM "A"
OUTFALL DETAILS

DESIGNED BY:	CHECKED BY:	DATE:	SHEET NO. 13
DRAWN BY:	CHECKED BY:	DATE:	
APPROVED BY:	DATE:	PROJECT NO: 9432900	

12/29/2004

N:\Austin\Project\U9432900\DGN\xxxxxxod.dgn

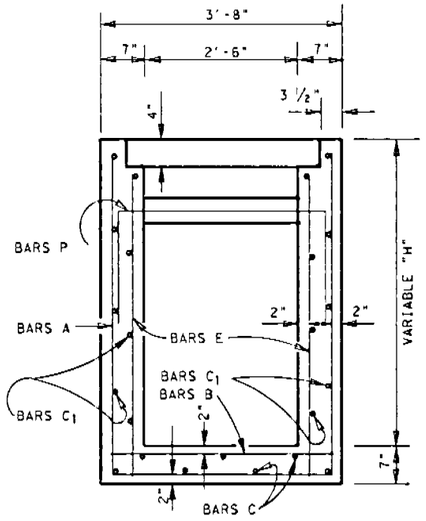

SECTION B-B

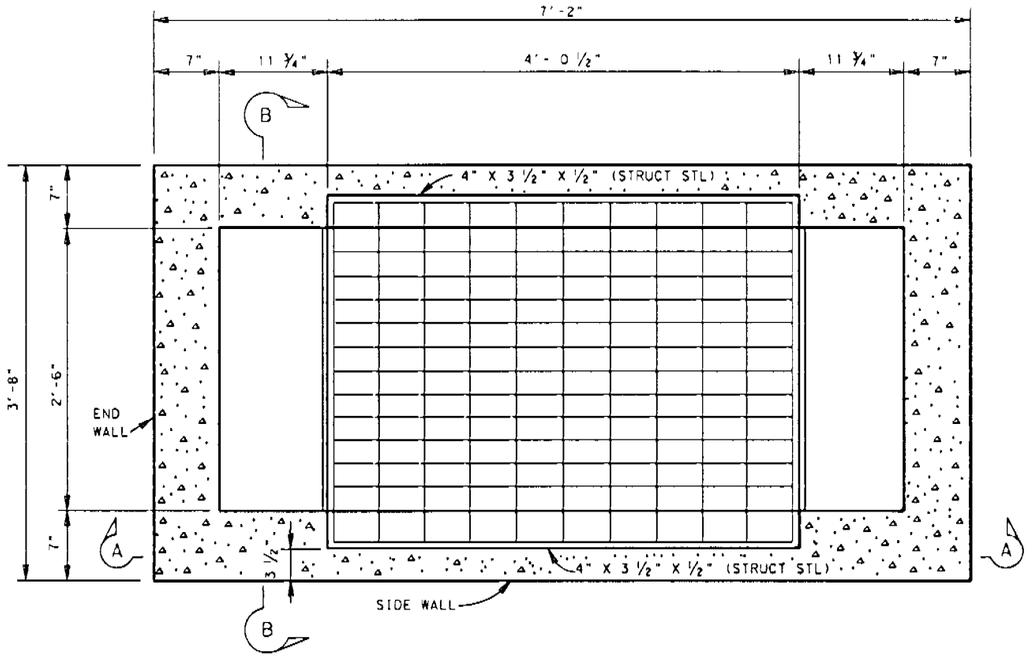

PLAN VIEW W/GRATE

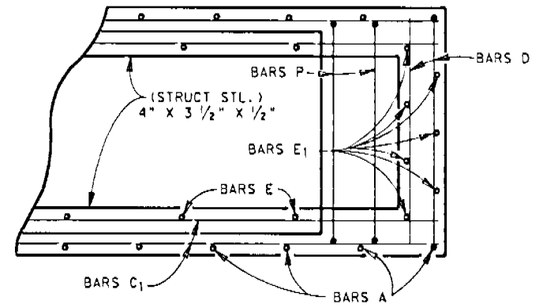

PARTIAL PLAN

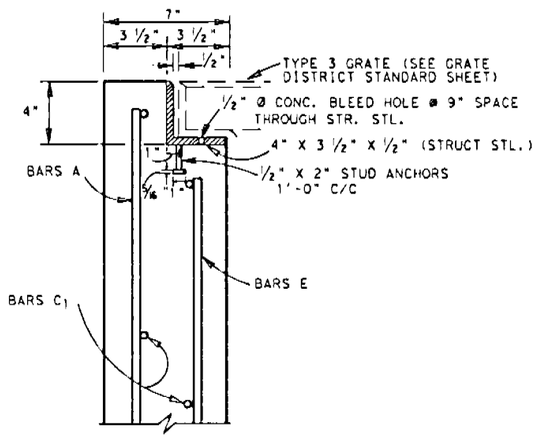

SIDE WALL
DETAIL
@ GRATE

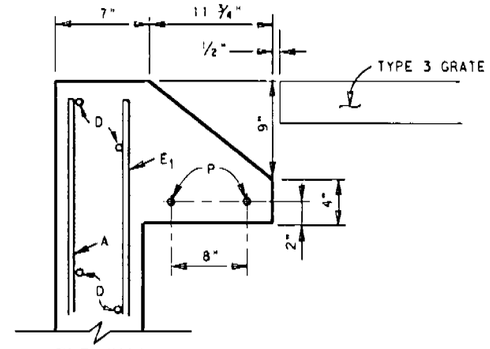

END WALL
DETAIL

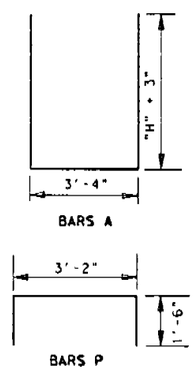

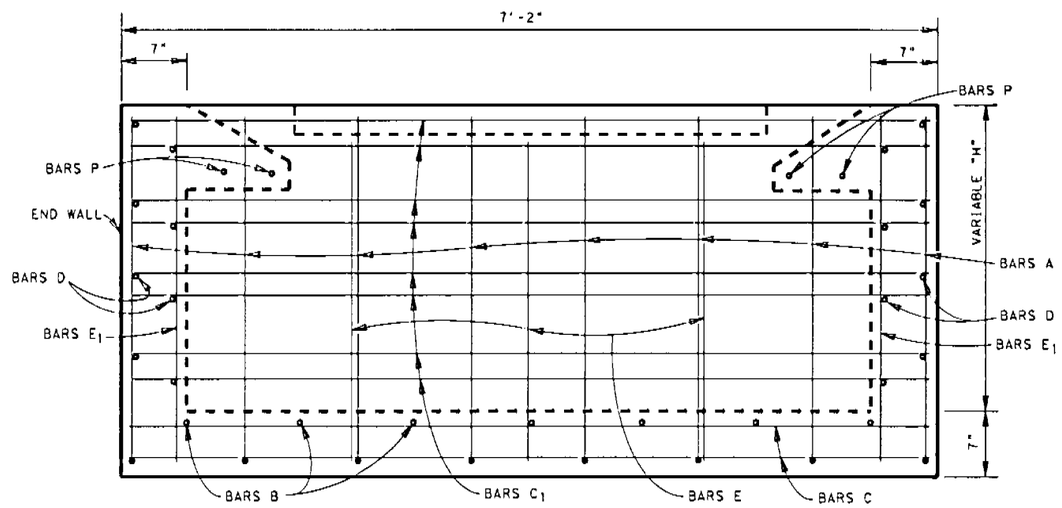

SIDE WALL
SECTION A-A

NOTES :

1. ALL CONCRETE SHALL BE CLASS "A". COARSE AGGREGATE GRADE "4" MAY BE USED.
2. DIMENSIONS RELATING TO REINFORCING STEEL ARE TO CENTER OF BARS.
3. REINFORCING STEEL SHALL BE FIELD BENT OR CUT TO ALLOW FOR INSTALLATION OF PIPE(S).
4. PIPES MAY BE PLACED ON ANY SIDE AS INDICATED IN THE PLANS.
5. THE STATION LOCATION AND OFFSET DISTANCE SHOWN IN THE PLANS IS TO THE CENTER OF THE INLET.
6. RIPRAP BASIN AROUND THE INLET WHEN SHOWN IN THE PLANS IS PAID FOR UNDER ITEM 432.
7. ALL EXPOSED CORNERS SHALL HAVE A 3/4" CHAMFER.

DROP INLET TYPE Y-1
SAN ANTONIO DISTRICT STANDARD

QUANTITIES WILL VARY WITH "H"

REINFORCING STEEL AND ESTIMATED QUANTITIES (BASED ON H = 3'-0")

BARS A (FLOOR & WALLS)					BARS B (FLOOR)					BARS C (FLOOR)					BARS C1 (SIDE WALLS)					BARS D (END WALLS)					BARS E (WALLS)					BARS E1 WALLS					BARS P					TOTALS			GRATE
NO.	SIZE	SPA.	LENGTH	WT.	NO.	SIZE	SPA.	LENGTH	WT.	NO.	SIZE	SPA.	LENGTH	WT.	NO.	SIZE	SPA.	LENGTH	WT.	NO.	SIZE	SPA.	LENGTH	WT.	NO.	SIZE	SPA.	LENGTH	WT.	NO.	SIZE	SPA.	LENGTH	WT.	NO.	SIZE	SPA.	LENGTH	WT.	REINF. STL. LBS.	CL. "A" CONC. C.Y.	STRUCT. STL. LBS.	TYPE 3 EA.
8	#4	12"±	9'-11"	53	7	#4	12"±	3'-5"	16	7	#4	12"±	6'-10"	32	16	#4	13±	6'-10"	73	16	#4	13±	3'-5"	37	6	#4	18"±	2'-11"	12	14	#4	12"±	3'-3"	30	4	#4	SHOWN	6'-2"	16	269 *	1.92 *	97 *	1 *

* FOR CONTRACTOR'S INFORMATION ONLY

© 1998 Texas Department of Transportation

FED. RD. DIV. NO.	PROJECT NO.	SHEET NO.
6		14

STATE	STATE DISTRICT	COUNTY
TEXAS	SAT	
CONT.	SECT.	JOB	HIGHWAY NO.

10/95

STRUCTURE DESIGN
/BRIDGE/STDS/DROPINY1.DGN

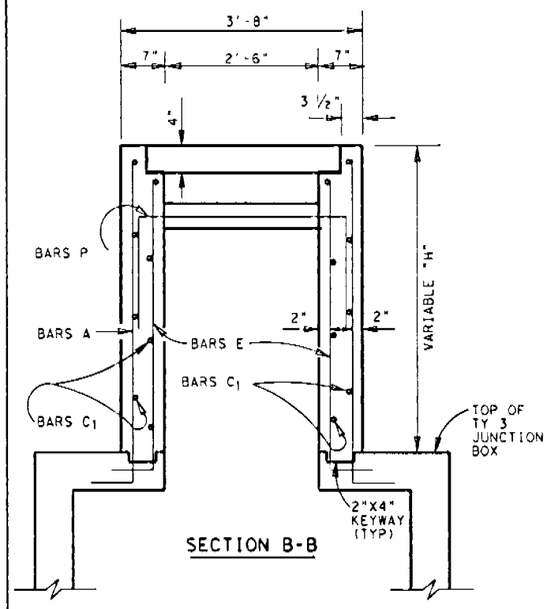

SECTION B-B

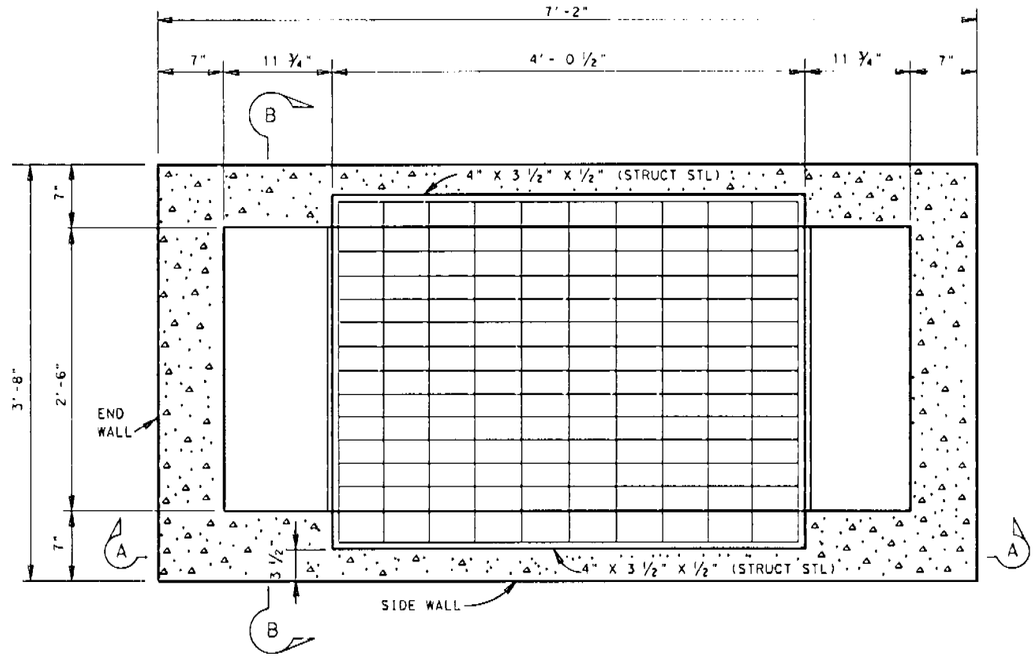

PLAN VIEW W/GRATE

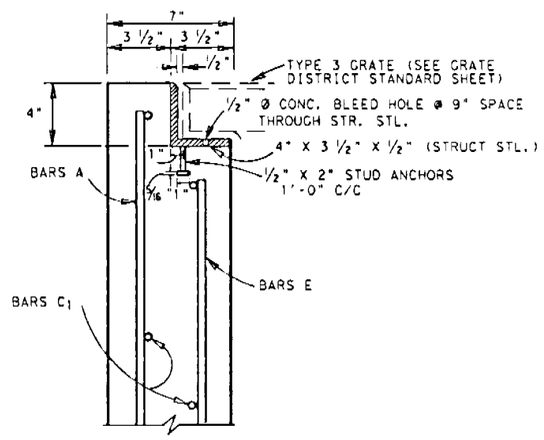

SIDE WALL DETAIL @ GRATE

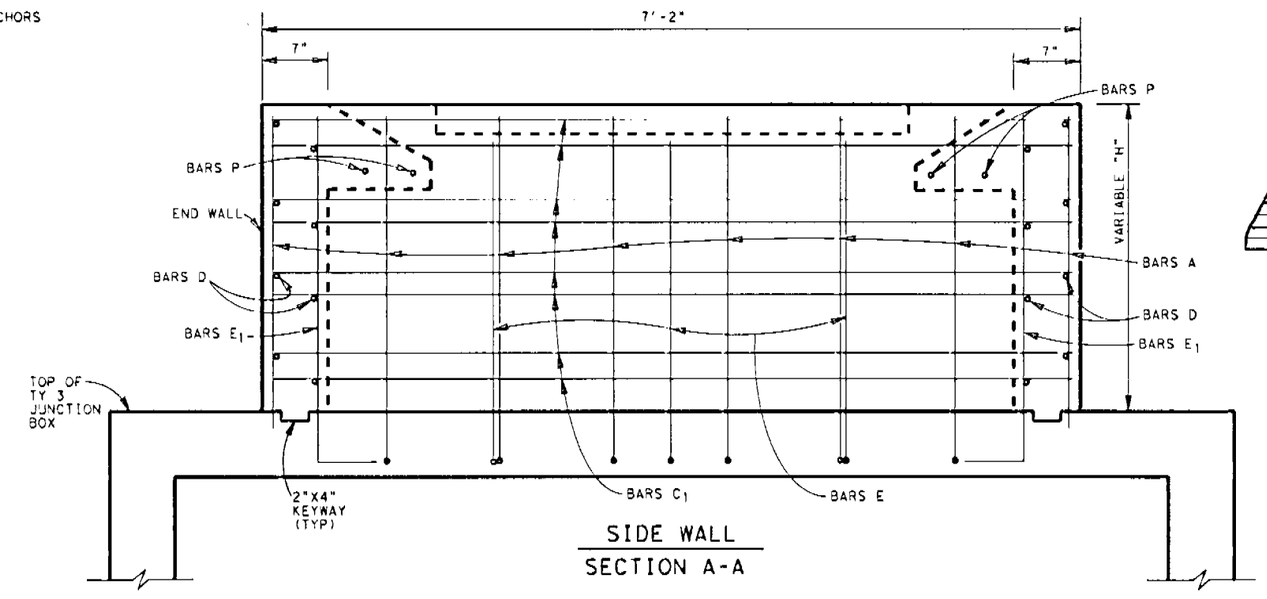

SIDE WALL SECTION A-A

NOTES :

1. ALL CONCRETE SHALL BE CLASS "A". COARSE AGGREGATE GRADE "4" MAY BE USED.
2. DIMENSIONS RELATING TO REINFORCING STEEL ARE TO CENTER OF BARS.
3. REINFORCING STEEL SHALL BE FIELD BENT OR CUT TO ALLOW FOR INSTALLATION OF PIPE(S).
4. PIPES MAY BE PLACED ON ANY SIDE AS INDICATED IN THE PLANS.
5. THE STATION LOCATION AND OFFSET DISTANCE SHOWN IN THE PLANS IS TO THE CENTER OF THE INLET.
6. RIPRAP BASIN AROUND THE INLET WHEN SHOWN IN THE PLANS IS PAID FOR UNDER ITEM 432.
7. ALL EXPOSED CORNERS SHALL HAVE A ¾" CHAMFER.

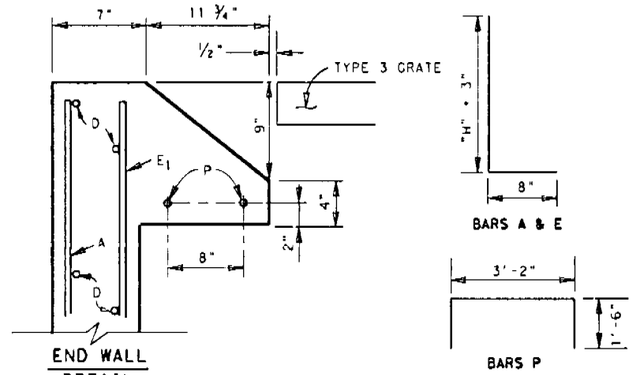

END WALL DETAIL

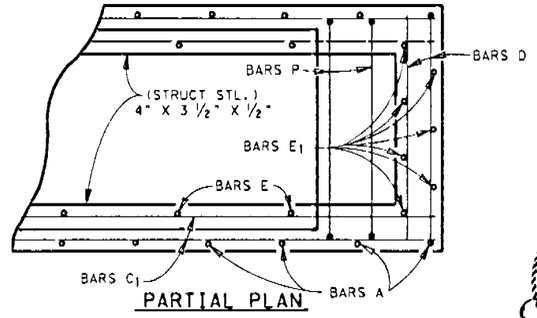

PARTIAL PLAN

The seal appearing on this document was authorized by DOUGLAS R. HIVELY P.E. 86278, on 12/29, 2004

DROP INLET TYPE Y-1 (MOD.)
SAN ANTONIO DISTRICT STANDARD

© 1998 Texas Department of Transportation

QUANTITIES WILL VARY WITH "H"

REINFORCING STEEL AND ESTIMATED QUANTITIES (BASED ON H = 3'-0")

BARS A (FLOOR & WALLS)					BARS C1 (SIDE WALLS)					BARS D (END WALLS)					BARS E (WALLS)					BARS E1 WALLS					BARS P					TOTALS			GRATE
NO.	SIZE	SPA.	LENGTH	WT.	NO.	SIZE	SPA.	LENGTH	WT.	NO.	SIZE	SPA.	LENGTH	WT.	NO.	SIZE	SPA.	LENGTH	WT.	NO.	SIZE	SPA.	LENGTH	WT.	NO.	SIZE	SPA.	LENGTH	WT.	REINF. STL. LBS.	CL. "A" CONC. C.Y.	STRUCT. STL. LBS.	TYPE 3 EA.
8	#4	12"±	3'-11"	53	16	#4	13±	6'-10"	73	16	#4	13±	3'-5"	37	6	#4	18"±	2'-11"	12	14	#4	12"±	3'-3"	30	4	#4	SPA. SHOWN	6'-2"	16	189 *	1.35 *	97 *	1 *

* FOR CONTRACTOR'S INFORMATION ONLY

10/95

F.D. NO. DIV. NO.	PROJECT NO.	SHEET NO.
6		15

STATE	STATE DISTRICT	COUNTY
TEXAS	SAT	

CONT.	SECT.	JOB	HIGHWAY NO.

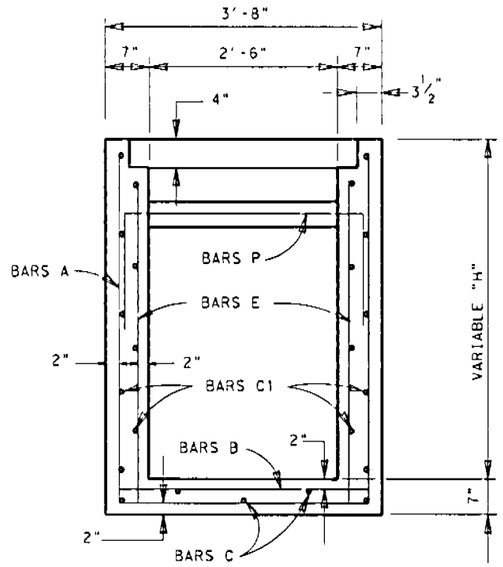

SECTION B-B

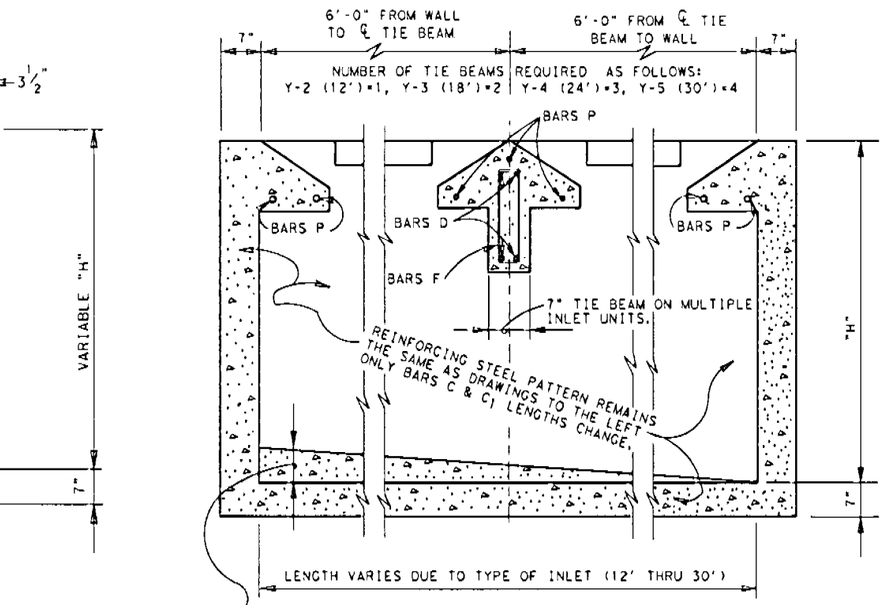

INVERT CONCRETE SHAPING SUBSIDIARY TO INLET. DEPTH VARIES WITH THE FLOWLINES OF THE PIPES.

SECTION A-A
(SIDE ELEVATION)

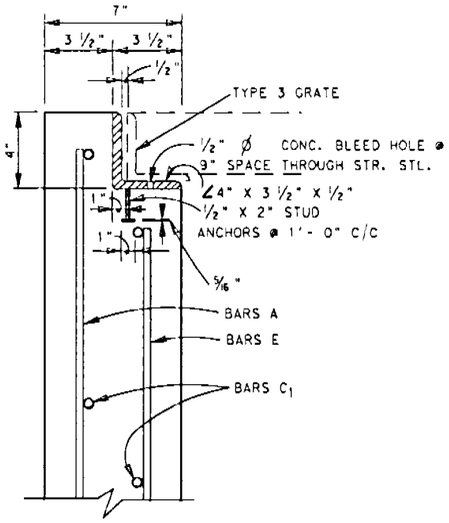

SIDE WALL DETAIL
@ GRATE

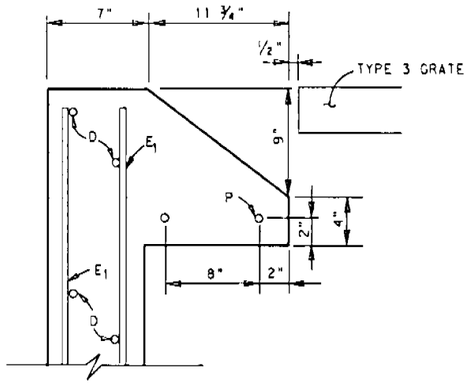

END WALL DETAIL

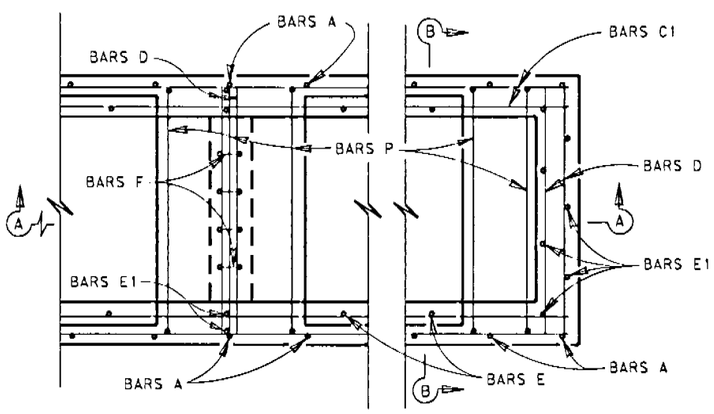

PARTIAL PLAN VIEW

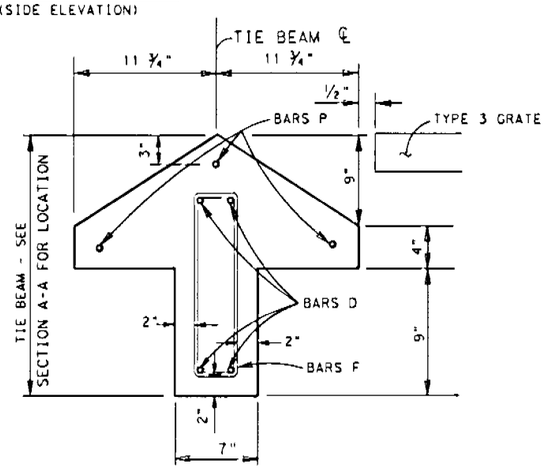

TIE BEAM DETAIL

GENERAL NOTES :

1. ALL CONCRETE SHALL BE CLASS "A". COARSE AGGREGATE GRADE "4" MAY BE USED.
2. DIMENSIONS RELATING TO REINFORCING STEEL ARE TO CENTER OF BARS.
3. REINFORCING STEEL SHALL BE FIELD BENT OR CUT TO ALLOW FOR INSTALLATION OF PIPE(S).
4. PIPES MAY BE PLACED ON ANY SIDE AS INDICATED IN THE PLANS.
5. PAYMENT FOR GRATES, CONC., REIN. & STRUCTURAL STEEL SHALL BE INCLUDED IN THE UNIT COST OF ITEM 465 "MANHOLES & INLETS".
6. THE STATION LOCATION AND OFFSET DISTANCE SHOWN IN THE PLANS IS TO THE CENTER OF THE INLET.
7. RIPRAP BASIN AROUND THE INLET WHEN SHOWN IN THE PLANS IS PAID FOR UNDER ITEM 432.
8. ALL EXPOSED CORNERS SHALL HAVE A 3/4" CHAMFER.

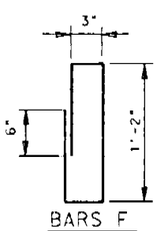

BARS F

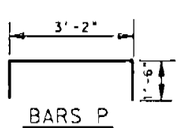

BARS P

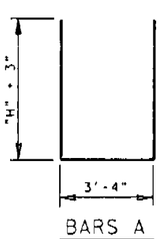

BARS A

ESTIMATED QUANTITIES ✳ (BASED ON "H" 3'-0")				
DESCRIPTION	INLET TYPES			
	Y-2	Y-3	Y-4	Y-5
CL. "A" CONC. CY.	3.3	4.7	6.1	7.5
REIN. STL. LBS.	429	607	787	966
STRUCT. STL. LBS.	195	292	389	486
GRATES (TYPE 3)	2	3	4	5

✳ FOR CONTRACTOR'S INFORMATION ONLY

QUANTITIES WILL VARY WITH A DIFFERENT "H".
REINFORCING STEEL (BASED ON "H" = 3'-0")

DROP INLET
TYPE Y-2 THRU Y-5

SAN ANTONIO DISTRICT STANDARD

INLET TYPE	BARS A					BARS B					BARS C					BARS C1				
	NO.	SIZE	SPAC.	LEN.	WT.	NO.	SIZE	SPAC.	LEN.	WT.	NO.	SIZE	SPAC.	LEN.	WT.	NO.	SIZE	SPAC.	LEN.	WT.
Y-2	14	#4	12"	9'-10"	92	13	#4	12"	3'-4"	29	5	#4	10"	12'-10"	43	14	#4	12 1/2"	12'-10"	120
Y-3	20	#4	12"	9'-10"	131	19	#4	12"	3'-4"	42	5	#4	10"	18'-10"	63	14	#4	12 1/2"	18'-10"	176
Y-4	26	#4	12"	9'-10"	171	25	#4	12"	3'-4"	56	5	#4	10"	24'-10"	83	14	#4	12 1/2"	24'-10"	232
Y-5	32	#4	12"	9'-10"	210	31	#4	12"	3'-4"	69	5	#4	10"	30'-10"	103	14	#4	12 1/2"	30'-10"	288

INLET TYPE	BARS D					BARS E					BARS E1					BARS P					BARS F				
	NO.	SIZE	SPAC.	LEN.	WT.	NO.	SIZE	SPAC.	LEN.	WT.	NO.	SIZE	SPAC.	LEN.	WT.	NO.	SIZE	SPAC.	LEN.	WT.	NO.	SIZE	SPAC.	LEN.	WT.
Y-2	20	#4	13"	3'-4"	45	12	#4	18"	2'-11"	23	18	#4	11"	3'-3"	39	7	#4	SHOWN	6'-2"	29	4	#4	6"	3'-4"	9
Y-3	24	#4	13"	3'-4"	53	18	#4	18"	2'-11"	35	22	#4	11"	3'-3"	48	10	#4	SHOWN	6'-2"	41	8	#4	6"	3'-4"	18
Y-4	28	#4	13"	3'-4"	62	24	#4	18"	2'-11"	47	26	#4	11"	3'-3"	56	13	#4	SHOWN	6'-2"	53	12	#4	6"	3'-4"	27
Y-5	32	#4	13"	3'-4"	71	30	#4	18"	2'-11"	58	30	#4	11"	3'-3"	65	16	#4	SHOWN	6'-2"	66	16	#4	6"	3'-4"	36

10/95

© 1998 Texas Department of Transportation

F.E.D. RD. DIV. NO.	PROJECT NO.	SHEET NO.
6		16

STATE	STATE DISTRICT	COUNTY
TEXAS	SAT	

CONT.	SECT.	JOB	HIGHWAY NO.

STRUCTURE DESIGN
/BRIDGE/STDS/DROPINY25.DGN

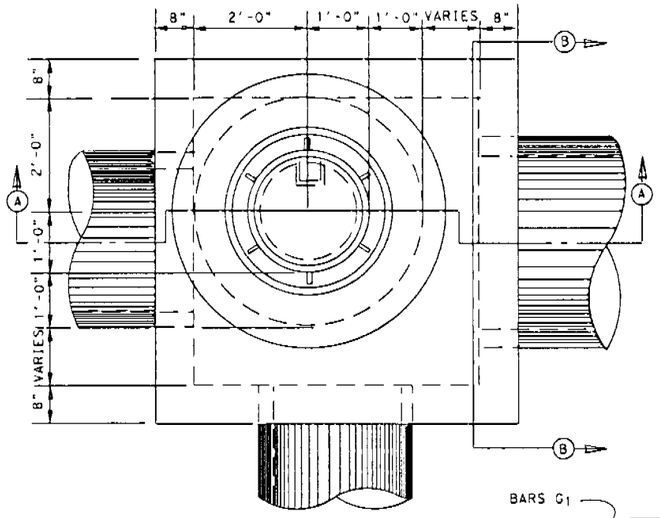

PLAN

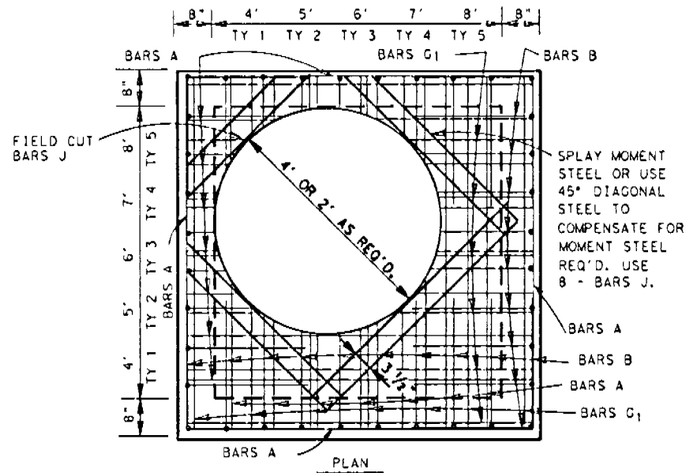

PLAN
JUNCTION BOX TOP SLAB

4' X 4' X 4' (TY 1)

BAR	NO.	SIZE	SPAC.	LEN.	WGT.
A	16	4	9"	5'-1"	54
B	32	5	8"	6'-6"	217
C	32	5	8"	4'-3"	142
D	16	4	9"	5'-1"	54
E	20	3	12"	3'-11"	29
G	20	4	12"	5'-0"	67
G_1	24	4	12"	5'-0"	80
H	20	3	12"	4'-5"	33
J	8	6	3 1/2"	3'-9"	45
REINF. STEEL				LBS.	721 *
# CL. A CONC.				C.Y.	3.35 *

6' X 6' X 6' (TY 3)

BAR	NO.	SIZE	SPAC.	LEN.	WGT.
A	20	4	9"	7'-1"	95
B	44	5	8"	8'-6"	390
C	44	5	8"	4'-3"	195
D	20	4	9"	7'-1"	95
E	28	3	12"	5'-11"	62
G	28	4	12"	7'-0"	131
G_1	32	4	12"	7'-0"	150
H	28	3	12"	6'-5"	68
J	8	6	3 1/2"	3'-9"	45
REINF. STEEL				LBS.	1231 *
# CL. A CONC.				C.Y.	6.87 *

5' X 5' X 5' (TY 2)

BAR	NO.	SIZE	SPAC.	LEN.	WGT.
A	18	4	9"	6'-1"	73
B	40	5	8"	7'-6"	313
C	40	5	8"	4'-3"	177
D	18	4	9"	6'-1"	73
E	24	3	12"	4'-11"	44
G	24	4	12"	6'-0"	96
G_1	28	4	12"	6'-0"	112
H	24	3	12"	5'-5"	49
J	8	6	3 1/2"	3'-9"	45
REINF. STEEL				LBS.	982 *
# CL. A CONC.				C.Y.	4.96 *

7' X 7' X 7' (TY 4)

BAR	NO.	SIZE	SPAC.	LEN.	WGT.
A	24	4	9"	8'-1"	130
B	52	5	8"	10'-6"	569
C	52	5	8"	5'-3"	285
D	24	4	9"	8'-1"	130
E	32	4	12"	6'-11"	148
G	32	4	12"	8'-0"	171
G_1	36	4	12"	8'-0"	192
H	32	3	12"	7'-5"	89
J	8	6	3 1/2"	3'-9"	45
REINF. STEEL				LBS.	1759 *
# CL. A CONC.				C.Y.	9.09 *

8' X 8' X 8' (TY 5)

BAR	NO.	SIZE	SPAC.	LEN.	WGT.
A	26	5	9"	9'-1"	246
B	56	5	8"	11'-6"	672
C	56	5	8"	5'-3"	307
D	26	5	9"	9'-1"	246
E	36	4	12"	7'-11"	190
G	36	4	12"	9'-0"	216
G_1	40	4	12"	9'-0"	240
H	36	4	12"	8'-5"	202
J	8	6	3 1/2"	3'-9"	45
REINF. STEEL				LBS.	2364 *
# CL. A CONC.				C.Y.	11.62 *

* QUANTITIES ARE FOR CONTRACTOR'S INFORMATION ONLY.
# CONCRETE QUANTITIES ALLOW FOR MANHOLE ACCESS BUT HAVE NOT BEEN DECREASED FOR DRAINAGE PIPES BECAUSE THE NUMBER AND SIZE VARY.

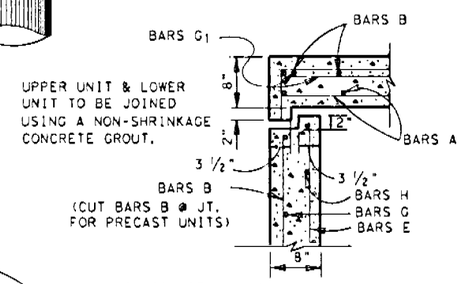

DETAIL A
PRECAST UPPER & LOWER UNIT

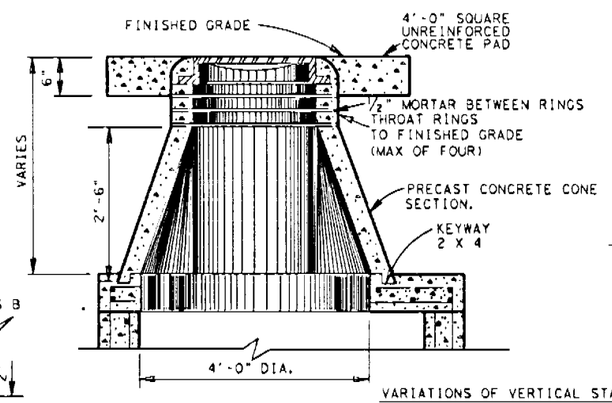

VARIATIONS OF VERTICAL STACK

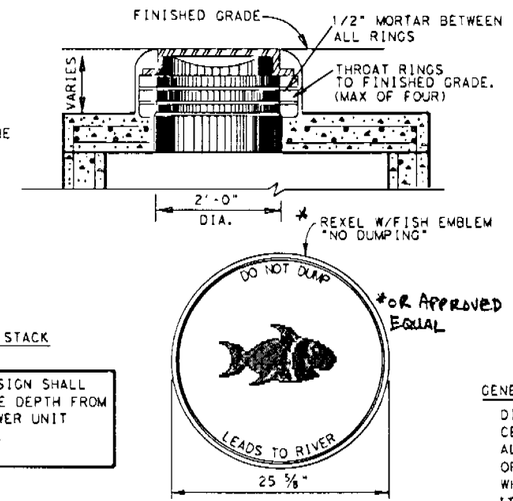

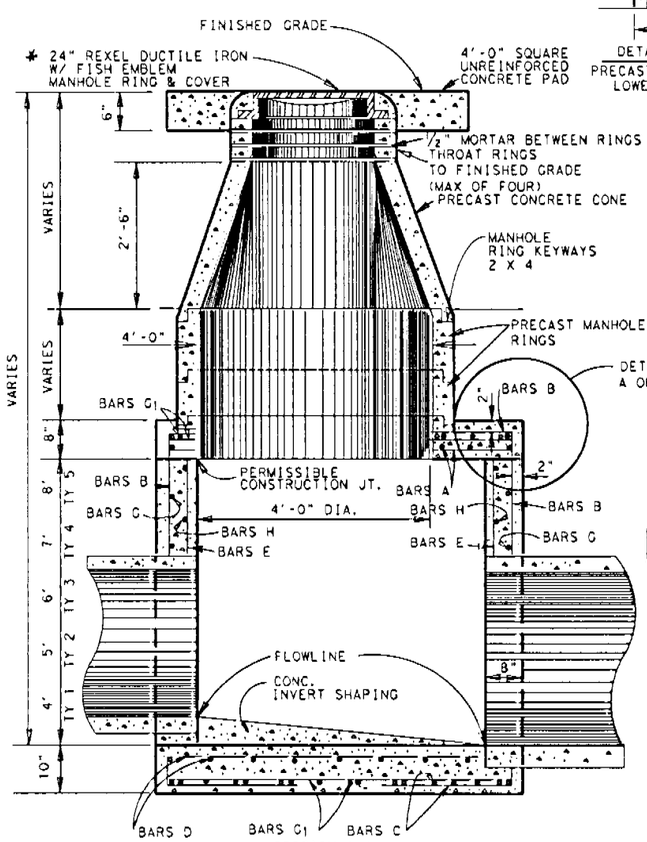

SECTION A-A

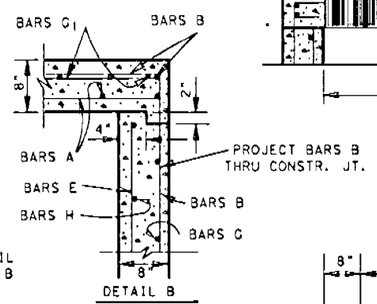

DETAIL B
CAST-IN-PLACE UPPER UNIT W/PRECAST LOWER UNIT

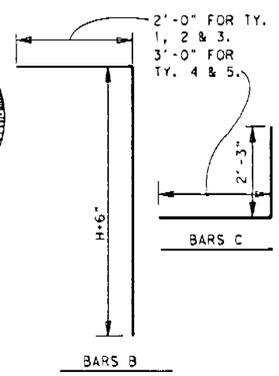

VERTICAL STACK DESIGN SHALL BE GOVERNED BY THE DEPTH FROM THE TOP OF THE LOWER UNIT TO FINISHED GRADE.

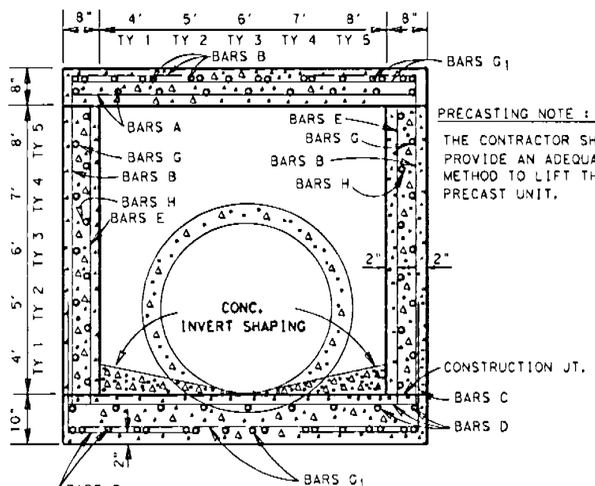

SECTION B-B

PRECASTING NOTE :

THE CONTRACTOR SHALL PROVIDE AN ADEQUATE METHOD TO LIFT THE PRECAST UNIT.

GENERAL NOTES:

DIMENSIONS FOR REINFORCING STEEL ARE TO CENTER OF BARS.
ALL BARS INTERCEPTING MANHOLE AND PIPE OPENINGS SHALL BE FIELD CUT OR BEND.
WHEN THE MANHOLE IS CLOSE TO EXISTING UTILITIES, IT SHALL BE THE CONTRACTOR'S RESPONSIBILITY TO PROTECT AND MAINTAIN THESE LINES.

MANHOLE RING AND COVER SHALL BE DESIGNED FOR HEAVY DUTY ROADWAY SERVICE. THE COVER SHALL BE SECURED BY BOLTS OR A LOCKING DEVICE.
FOR COVER NOT ON SAN ANTONIO CITY STREET, DELETE "CITY OF SAN ANTONIO & SCALES OF JUSTICE". THE LOAD BEARING SURFACE SHALL BE MACHINE GROUND.

THE NUMBER, SIZE AND LOCATION OF PIPES WILL VARY; SEE THE CULVERT SECTIONS.

MANHOLE
TYPE 1 THRU 5
SAN ANTONIO DISTRICT STANDARD

STATE OF TEXAS
DOUGLAS R. HIVELY
86278
REGISTERED PROFESSIONAL ENGINEER

The seal appearing on this document was authorized by DOUGLAS R. HIVELY P.E. 86278, on 12/29, 2004

© 1998 Texas Department of Transportation

FED. RD. DIV. NO.	PROJECT NO.	SHEET NO.
6		17
STATE	STATE DISTRICT	COUNTY
TEXAS	SAT	
CONT.	SECT.	JOB	HIGHWAY NO.

10/95

STRUCTURE DESIGN
7BRIDGE/STDS/DMHOLE1T5.DGN