CITY OF KERRVILLE

MAIN STREET EXTENSION PROJECT

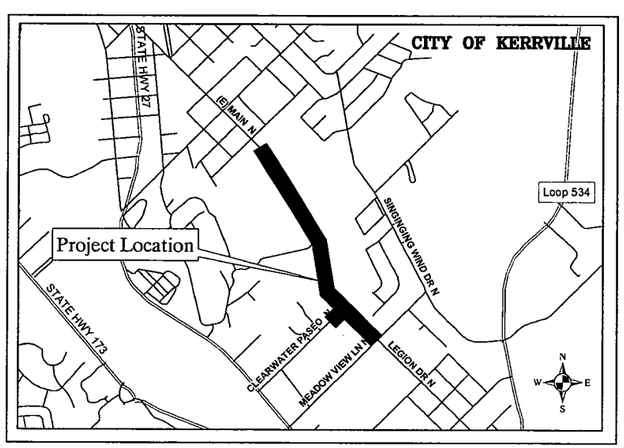

PROJECT LOCATION MAP
N.T.S.

TDLR INSPECTION REQUIRED

LOCKWOOD, ANDREWS & NEWNAM, INC.

STATE OF TEXAS
DAWN ANN GREEN
79721
LICENSED
PROFESSIONAL ENGINEER

Dawn Green
9-30-04

OCTOBER 2004

L:\119731\120-02178-005\PROD\5_0_DESIGN-REFERENCE\5_13_DRAWINGS\FINAL PLANS\C01-COVER.DWG

HORIZONTAL CONTROL

POINT	NORTHING	EASTING	DESCRIPTION
1071	13923978.7720	1928269.3892	60D NAIL
979	13923309.2836	1928673.4454	60D NAIL
763	13922107.4957	1929263.6307	1/2" IR/RED CAP
406	13921374.7617	1929301.6530	1/2" IR/RED CAP
218	13921116.3313	1930142.2149	1/2" IR/RED CAP

NOTE: SEE PLAN FOR LOCATIONS

VERTICAL CONTROL

BENCHMARK	ELEVATION	DESCRIPTION
TBM #1	1628.47	SPINDLE IN POWER POLE
TBM #2	1637.55	"SQUARE" CUT IN CURB
TBM #3	1618.11	SPINDLE IN 10" MESQUITE TREE
TBM #4	1607.52	"SQUARE" CUT IN CURB

NOTE: SEE PLAN FOR TBM LOCATIONS

SURVEY DATUM NOTES

1. ALL COORDINATES SHOWN HEREON ARE IN U.S. SURVEY FEET.
2. SURFACE COORDINATES WERE DERIVED BY DIVIDING THE GRID VALUE BY THE SCALE FACTOR 0.9998627.
3. GRID COORDINATES ARE REFERENCED TO THE TEXAS STATE PLANE COORDINATE SYSTEM, SOUTH CENTRAL ZONE.
4. ELEVATIONS ARE REFERENCED TO FEMA BENCHMARK RM-90 WITH NGVD-1929 PUBLISHED ELEVATION OF 1605.44 FEET.

INDEX TO DRAWINGS

C1 COVER
C2 SURVEY CONTROL NOTES & INDEX TO DRAWINGS
C3 GENERAL NOTES
C4 QUANTITY SUMMERY SHEETS
C5-C18 STREET PLAN AND PROFILE SHEETS
C19-C34 CROSS SECTION SHEETS
C35 DRAINAGE AREA MAP
C36-C39 STORM SEWER PLAN & PROFILE SHEETS
C40-C43 CULVERT PLAN AND PROFILE SHEETS
C44-C50 WATER LINE PLAN SHEETS
C51 SANITARY SEWER PLAN SHEET
C52-C60 SW3P SHEETS
C61 TYPICAL PAVEMENT SECTIONS
C62-C63 WATER LINE DETAIL SHEETS
C64-C65 SANITARY SEWER DETAILS
C66-C78 STORM DRAINAGE DETAILS
C79 DRIVEWAY DETAILS
C80 WHEELCHAIR RAMP DETAILS
C81-C83 BARRICADE AND CONSTRUCTION DETAILS
C84 MISCELLANEOUS DETAILS

Lockwood, Andrews & Newnam, Inc.

STATE OF TEXAS
JOHN ANN GREEN
79721
LICENSED
PROFESSIONAL ENGINEER

9-30-04

City of Kerrville
Main Street Extension Project

MAIN STREET
SURVEY CONTROL NOTES & INDEX TO DRAWINGS

No.	Date	Revisions	App.

Scale: -
Date: Aug. 2004
Designed by: T.C.
Drawn by: M.K.
Checked by: P.J.
Approved by: D.G.
Project No. 2178-20-001

C2

L:\119731\120-02178-005\PROD\5_0_DESIGN-REFERENCE\5_13_DRAWINGS\FINAL PLANS\C01-COVER.DWG

GENERAL NOTES:

1. All construction shall comply with the City of Kerrville and Texas Commission Environmental Quality (TCEQ) ordinances, codes and regulations.

2. The contractor is responsible for notification of all authorized inspectors and persons in charge of private and public utilities affected by this project prior to commencement of work.

3. All bidders are hereby notified to make such subsurface investigations as they deem necessary. No additional payment shall be made for rock, sand, gravel or other unstable conditions encountered in utility excavations.

4. No blasting will be permitted.

5. The contractor shall provide trench safety in accordance with OSHA specifications and provide daily inspections to ensure that those requirements are being met. The contractor is responsible for ensuring the safety of those persons working in and around the trench.

6. All entrances to property shall be restored immediately. The contractor shall maintain access to property adjacent to construction at all times. Should the contractor find any discrepancy or omissions from the construction plans, he will notify the City Engineer at once to obtain clarification.

7. Location and depth of existing utilities, to include service laterals, shown here are approximate only. Actual depths and locations shall be field verified by the contractor prior to construction. The contractor agrees to be fully responsible for any and all damages to existing utilities caused by his failure to locate and preserve any and all existing utilities. The contractor shall repair damages to existing utilities at no additional cost.

8. It shall be the contractor's responsibility to locate utility service lines 48 hours prior to excavation and protect the same utilities during construction.
   a. Electrical Lines – KPUB – 800 – DIG – TESS
   b. Water/Wastewater – City of Kerrville – (830) 792–8319
   c. Gas Lines – Lone Star Gas – 800 – DIG – TESS
   d. Telephone – Kerrville Telephone – 800 – DIG – TESS

9. Contractor is responsible for the removal of all wastes associated with construction. Contractor shall protect all trees on project site except those located within the pavement limits. No existing trees shall be trimmed without authorization of the Engineer.

10. The contractor shall be responsible for safeguarding and protecting all material and equipment stored on the jobsite. The contractor shall be responsible for the storage of materials in a safe and workmanlike manner to prevent injuries, during and after work hours, until project completion.

11. The contractor shall not unload any track–type construction machinery on any existing pavement or cross over any existing pavement or curb during the project, unless that pavement or curb is scheduled to be replaced as part of this project, or upon approval of the Engineer.

12. Contractor shall replace and restore to original, or better, condition, location and elevation, all existing improvements disturbed by construction activities at no additional cost unless otherwise noted. Any other incidental work associated with this project that is not specifically identified shall be considered subsidiary to applicable bid items and there will be no separate payment.

13. The contractor must maintain all streets within project limits open to through traffic by repairing trenches, potholes, leveling up with asphalt, etc. at no direct payment.

14. The contractor shall be responsible for providing suitable access accommodations for school children and pedestrians.

15. The contractor shall provide access for delivery of mail by the U.S. Postal Service.

16. The contractor shall provide for access to residences and all businesses at all times within all the phases of the work.

17. Remove, as soon as practical, accumulated waste and open each block for public use. Use of any portion of street shall not constitute acceptance of any portion of work. Backfill and shape trenches across street intersections or driveways for safe traffic at night or, where permitted, span open trenches with traffic rated steel plates or other approved devices to permit traffic flow. When driveways are cut, immediate placement of steel plates or other approved devices for ingress or egress of vehicles may be directed if undue hardship to property owner would otherwise result.

18. Do not block ditches, inlets, fire hydrants, gas valves, etc., and, where necessary, provide temporary drainage.

19. The contractor shall provide the City an emergency telephone number for evenings, weekends, and holidays by the first working day of the project. This telephone number must be a commercial answering service. The answering service must be able to contact the contractor and have the contractor respond to the City staff within two hours of the initial contact.

20. The contractor is responsible for repairing all streets outside of the project limits which are damaged due to construction activities. The replaced section must be approved by the City Engineer. There will be no direct payment for this work.

21. A Geotechnical Engineering Study titled "Proposed Main Street Extension Kerrville, Texas" prepared by Fugro Consultants, LP. is available for review at the City Engineer's office.

22. Monuments for horizontal and vertical control of the project have been established by the owner, these benchmarks are shown on the drawings. Contractor shall provide detailed staking for construction from these referenced marks to the extent necessary to assure compliance with proposed grades and alignment. Contractor will not be paid directly for construction staking. The work is subsidiary to various bid items of which, it forms a component.

STORM SEWER NOTES:

1. The contractor shall be responsible for maintaining water service to existing structures and fire hydrants at all times during construction, except during approved periods of outage, as allowed by the City Engineer. Maintaining service shall include repair of leaks or breaks on existing water mains or services which may occur as a result of construction activities. Contractor shall notify the City Engineer prior to the need to close or open any water valves, only city personnel may open or close water valves on the existing system. No additional payment shall be allowed for repair of water mains required as result of construction activities.

2. Water jetting backfill will not be permitted. All storm sewer shall be bedded and backfilled as detailed in the construction plans and specifications.

3. Concrete storm sewer pipe shall be reinforced concrete pipe (ASTM C–55 and C–76 class III).

4. Contractor shall be responsible for excavating, uncovering, and verifying the flowline elevations of all sanitary sewer mains prior to placing storm sewer pipe. Contact the City Engineer if conflicts exist with sanitary sewer mains.

5. After construction, storm sewer testing shall be performed using a video camera, observed by the City Inspector and the contractor, as the camera is run through the line. The contractor at his expense must replace any abnormalities such as broken pipe, misaligned or offset joints.

6. Contractor shall seal joints with cold applied butyl mastic sealant. All lifting holes must also be sealed with a preformed concrete plug and butyl mastic sealant.

WATER LINE NOTES:

1. All water lines shall have minimum 36–inches of cover unless otherwise noted.

2. Based on the construction inspectors discretion, tie–ins are to be conducted at night or at the time least inconvenient to the property owners. This shall be acomplished at no additional cost to the City of Kerrville.

3. after the new mains have been released for serviceand where applicable service lines have been transferred to the new main, abandon existing water mains.

4. All water main installation shall be coordinated with construction Inspector and Kerrville's city engineer.

5. All new water mains shall be PVC water pipe C–900, DR14–Class 200 for sizes up to 12–inch diameter and C–905, DR18–235PSI for 14–inch and larger.

TRAFFIC CONTROL NOTES:

1. The contractor shall be responsible for providing and maintaining all barricades, warning signs, flashing lights, and traffic control devices in accordance with the Texas Manual on Uniform Traffic Control Devices. and shown on a Traffic Control Plan submitted by the contractor for approval by the City Engineer.

2. It is the contractor's sole responsibility to see that all traffic control devices are properly installed and maintained at the job site in accordance with the plans, specifications and related industry standards and regulations

3. The Contractor shall provide, erect and maintain at all times during the progress or temporary suspension of the work suitable barricades, fences, signs or other adequate warnings or protection, and shall provide, keep and maintain such danger lights, signals, and flagmen as may be necessary to insure the safety of the public as well as those engaged in connection with the work. All barricades and obstructions shall be protected at night by signal lights which shall be suitably distributed across the roadway and which shall be kept burning from sunset to sunrise. The Contractor shall provide all barricades and the placement of all barricades shall meet the requirements as provided within Part VI, Texas Manual on Uniform Traffic Control Device for Streets and Highways.

4. As work progresses, location of temporary traffic control devices will be adjusted and modified, as necessary by the contractor. If need arises, additional barricades and directional devices, may be ordered by the Engineer at the contractor's expense.

5. Temporary traffic control devices shall conform to the Texas Manual on Uniform Traffic Control Devices.

6. The contractor shall maintain continuous access to all intersecting streets unless otherwise shown on these plans. Intersecting streets shall be constructed in stages so as to maintain access. Intersection work shall be done during weekend hours or as directed by the Engineer. No two adjacent intersections may be constructed simultaneously. With approval from the Engineer, the Contractor may close an entire intersection. The Contractor will be required to provide a detour plan for such a closure to the Engineer for approval.

7. Except where approved otherwise, do not hinder or inconvenience travel on streets or intersecting alleys for more than two blocks at any one time. Whenever street is closed, place properly worded sign announcing fact to public, with proper barricades at nearest street corners, on both sides of obstruction. Leave no street or driveway blocked at night. All street closures shall be reported to the Police and Fire Departments as well as the City Inspector.

8. The contractor shall maintain either the existing or temporary street name signs at each intersection onsite throughout construction. If the existing street name signs are used, they must be maintained in the condition encountered prior to the beginning of construction. If temporary signs are used during construction, they shall have a minimum of 4–inch letters, and may be fabricated with construction zone material (black legend on orange background, using plywood substrate, etc.).

9. Failure of the Engineer to notify the Contractor to maintain barriers, lights, signals, or flagmen shall not relieve the Contractor from this responsibility.

10. The Contractor's responsibility for the safeguarding of traffic as specified above shall cease when the work included in the contract is completed and accepted by the City.

Lockwood, Andrews & Newnam, Inc.

STATE OF TEXAS
DAWN ANN GREEN
79721
LICENSED
PROFESSIONAL ENGINEER

City of Kerrville
Main Street
Extension
Project

GENERAL NOTES

No.	Date	Revisions	App.

Scale: 1" = 40' Date: Aug. 2004
Designed by: T.C.
Drawn by: M.K.
Checked by: P.J.
Approved by: D.G.
Project No. 2178-20-001

C3

L:\119731\120-02178-005\PROD\5_0_DESIGN-REFERENCE\5_13_DRAWINGS\C02-GENNOTES.DWG

SANITARY SEWER NOTES:

1. LOCATION AND DEPTH OF EXISTING UTILITIES SHOWN HERE ARE APPROXIMATE ONLY. ACTUAL LOCATIONS AND DEPTHS MUST BE VERIFIED BY THE CONTRACTOR PRIOR TO CONSTRUCTION AND SHALL BE RESPONSIBLE FOR PROTECTION OF SAME DURING CONSTRUCTION.

2. CONTRACTOR SHALL BE RESPONSIBLE FOR RESTORING TO ITS ORIGINAL OR BETTER CONDITION ANY DAMAGES DONE TO EXISTING TREES, IRRIGATION SYSTEM, CONCRETE PATHS AND ELECTRIC CONDUITS. NO SEPARATE PAY ITEM. INCLUDE COST IN OTHER ITEMS OF WORK.

3. THE CONTRACTOR IS RESPONSIBLE TO ENSURE THAT NO OVERFLOWS OR SPILLAGE OF SEWAGE OCCURS. SHOULD THIS OCCUR, THE CONTRACTOR SHALL:

(a) IDENTIFY THE SOURCE OF THE SPILL AND ATTEMPT TO ELIMINATE ANY ADDITIONAL SPILLAGE. NOTIFY CONSTRUCTION INSPECTORS.

(b) CONTAIN THE SPILL IN PLACE AND AVOID CONTAMINATION OF STREAMS.

(c) CLEAN UP THE SPILL AND DISPOSE OF CONTAMINATED MATERIALS.

(d) DISINFECT THE AREA OF THE SPILL WITH A MIXTURE OF HTH CHLORINE AND WATER.

(e) IDENTIFY AND TRAIN PERSONNEL RESPONSIBLE FOR SPILL PREVENTION AND CONTROL.

NO SEPARATE MEASUREMENT OR PAYMENT SHALL BE MADE FOR THIS WORK. ALL WORK SHALL BE DONE ACCORDING TO SPECIFICATIONS SET BY THE TCEQ AND THE CITY OF KERRVILLE PUBLIC WORKS DEPARTMENT.

4. THE CONTRACTOR SHALL NOT PLACE ANY WASTE MATERIALS IN THE 100-YEAR FLOOD PLAIN WITHOUT FIRST OBTAINING AN APPROVED FLOOD PLAIN DEVELOPMENT PERMIT.

5. ON ALL MANHOLES TO BE ABANDONED, REMOVED OR REPLACED, THE RINGS AND COVERS SHALL BE SALVAGED, THE HOLE BACKFILLED TO THE SATISFACTION OF THE INSPECTOR (NO SEPARATE PAY ITEM).

6. A MINIMUM OF 3 FEET OF COVER IS TO BE MAINTAINED OVER THE SANITARY SEWER MAIN.

7. A DEFLECTION TEST SHALL BE PERFORMED ON ALL FLEXIBLE PIPE. THE TEST SHALL BE CONDUCTED AFTER THE INITIAL BACKFILL HAS BEEN IN PLACE AT LEAST 30 DAYS.

8. WHEN SEWER LINES ARE INSTALLED IN THE VICINITY OF WATER MAINS, SUCH INSTALLATION SHALL BE IN STRICT ACCORDANCE WITH THE TCEQ'S RULES (NO SEPARATE PAY ITEM).

REVEGETATION NOTES:

1. ALL AREAS RECEIVING FIBER MULCH SEEDING SHALL BE WATERED TWICE A DAY, MONDAY THROUGH SATURDAY.

2. IN LIEU OF USING A WATER TRUCK, THE CONTRACTOR MAY USE, WITH THE CITY'S APPROVAL, A FIRE HYDRANT FOR WATERING. HOWEVER, THIS IS SUBJECT TO CURRENT WATERING RESTRICTIONS, METERING THE WATER AND USING AN APPROVED REDUCED PRESSURE BACKFLOW PREVENTION ASSEMBLY (RPZ).

TREE PROTECTION AND PRESERVATION NOTES:

1. TREE PROTECTION FENCING SHALL BE REQUIRED AND SHALL BE INSTALLED, MAINTAINED AND REPAIRED BY THE CONTRACTOR DURING CONSTRUCTION AS DIRECTED BY THE INSPECTOR (NO SEPARATE PAY ITEM).

2. THE CONTRACTOR SHALL AVOID CUTTING ROOTS LARGER THAN ONE INCH IN DIAMETER WHEN EXCAVATING NEAR EXISTING TREES. EXCAVATION IN THE VICINITY OF TREES SHALL PROCEED WITH CAUTION THE CONTRACTOR SHALL CONTACT THE CITY INSPECTOR FOR GUIDANCE.

3. EXPOSED ROOTS SHALL BE COVERED AT END OF THE DAY USING TECHNIQUES SUCH AS COVERING WITH SOIL, MULCH OR WET BURLAP.

4. NO EQUIPMENT, VEHICLES OR MATERIALS SHALL OPERATE OR BE STORED WITHIN THE ROOT PROTECTIVE ZONE OF ANY TREE. ROOT PROTECTION ZONE IS ½ FOOT PER DIAMETER INCH OF THE TREE RADIUS. A 10-INCH DIAMETER TREE WOULD HAVE A 5-FOOT RADIUS ROOT PROTECTION ZONE AROUND THE TREE. ROOTS OR BRANCHES IN CONFLICT WITH THE CONSTRUCTION SHALL BE CUT CLEANLY ACCORDING TO PROPER PRUNING METHODS. LIVE OAK WOUNDS SHALL BE PAINTED OVER WITHIN 30 MINUTES TO PREVENT OAK WILT.

5. ANY TREE REMOVAL SHALL BE APPROVED BY THE CITY.

6. TREES WHICH ARE DAMAGED OR LOST DUE TO THE CONTRACTOR'S NEGLIGENCE DURING CONSTRUCTION SHALL BE MITIGATED TO THE CITY'S SATISFACTION.

7. TREE, TREE LIMBS, AND BUSHES AND SHRUBS LOCATED IN THE PERMANENT EASEMENT WHICH INTERFERE WITH PROPOSED CONSTRUCTION ACTIVITIES MAY BE NEATLY TRIMMED BY THE CONTRACTOR ONLY AFTER APPROVAL FROM THE CITY.

8. NO EXCESSSIVE TREE TRIMMING WILL BE PERMITTED.

9. SAPLINGS, SHRUBS OR BRUSHES TO BE CLEARED FROM TEH PROTECTED ROOT ZONE AREA OF A LARGE TREE SHALL BE REMOVED BY HAND AS DESIGNATED BY INSPECTOR.

10. ALL DEBRIS GENERATED BY THE PRUNING AND TRIMMING OF THE TREES AND/OR BUSHES SHALL BECOME THE PROPERTY OF THE CONTRACTOR AND SHALL BE DISPOSED OF PROPERLY (N.S.P.I.).

CITY OF KERRVILLE
MAIN STREET CONSTRUCTION PROJECT
KERRVILLE, TEXAS
SUMMERY OF QUANTITIES

BID ITEM	DESCRIPTION	UNITS	QTY
1	MOBILIZATION	LS	1
2	REMOVE ASPHALT PAVEMENT	S.Y.	1849
3	REMOVE CONCRETE CURB AND GUTTER	L.F.	150
4	EXCAVATION AND SUBGRADE PREPARATION	S.Y.	20134
5	LIME STABILIZED SUBGRADE (6-INCH COMPACTED DEPTH)	S.Y.	20134
6	HOT-MIX ASPHALTIC SURFACE COURSE TYPE "D" (2-INCH COMPACTED DEPTH) PER TxDOT SPEC ITEM NO. 340	TON	1962
7	HOT-MIX ASPHALTIC BASE COURSE TYPE "A" (7-INCH COMPACTED DEPTH) PER TxDOT SPEC ITEM NO. 340	TON	7247
8	CONCRETE PAVEMENT REPAIR	L.F.	50
9	ASPHALT PAVEMENT REPAIR	L.F.	50
10	CONCRETE CURB AND GUTTER	L.F.	7978
11	CONCRETE SIDEWALKS	S.Y.	4778
12	CONCRETE DRIVEWAYS	S.Y.	56
13	TxDOT TYPE "E" CURB - RETAINING WALL	L.F.	160
14	PEDESTRIAN HANDRAIL - TxDOT TYPE RHD-97	L.F.	160
15	CELLULOSE FIBER MULCH SEEDING AND REVEGATATION PER TxDOT STANDARD SPEC ITEM 164, EXCEPT NO SEPARATE PAYMENT FOR WATERING	AC	2.56
16	FURNISH AND PLACE 4-INCHES OF TOPSOIL PER TxDOT STANDARD SPEC ITEM NO. 160	S.Y.	12410
17	BARRICADES, SIGNS, AND TRAFFIC HANDLING INCLUDING TRAFFIC CONTROL PLAN	MO	10
18	30-INCH REINFORCED CONCRETE STORM SEWER PIPE (CLASS III)	L.F.	1487
19	10 FT. CURB INLET, TYPE I WITH 1-10 FT. EXTENSION (TOTAL 20 FT. CURB OPENING)	EA.	4
20	STORM SEWER MANHOLE 4' x 4' x 4' TYPE 1	EA.	5
21	8' x 4' PRECAST CONC. BOX CULVERT	L.F.	538
22	6' x 3' PRECAST CONC. BOX CULVERT	L.F.	55
23	5' X 2' PRECAST CONC. BOX CULVERT	L.F.	104
24	CULVERT "A" (1 - 6' x 3' SBC) PARALLEL WINGWALLS (INCLUDES BOTH UPSTREAM AND DOWNSTREAM WINGWALLS)	LS	1
25	CULVERT "B" (3 - 8' x 4' MBC) PARALLEL WINGWALLS (INCLUDES BOTH UPSTREAM AND DOWNSTREAM WINGWALLS)	LS	1
26	CULVERT "C" (5 - 8' X 4' MBC) PARALLEL WINGWALLS (INCLUDES BOTH UPSTREAM AND DOWNSTREAM WINGWALLS)	LS	1
27	CULVERT "D" (2 - 5' X 2' MBC) PARALLEL WINGWALLS (INCLUDES BOTH UPSTREAM AND DOWNSTREAM WINGWALLS)	LS	1
28	GABION MATTRESS 12" THICK COMMON STONE RIP-RAP	C.Y.	23
29	COMBINATION METAL BEAM GUARD FENCE AND PEDESTRIAN RAIL (TxDOT COMBINATION RAIL TYPE C101)	L.F.	372
30	6-INCH PVC, C 900, DR14, CLASS 200 WATER PIPE INCLUDING ALL FITTINGS AND MEGA LUGS AND TIE-INS TO EXISTING WATER MAINS	L.F.	30
31	8-INCH PVC, C 900, DR14, CLASS 200 WATER PIPE INCLUDING ALL FITTINGS AND MEGA LUGS AND TIE-INS TO EXISTING WATER MAINS	L.F.	1005
32	10-INCH PVC, C 900, DR14, CLASS 200 WATER PIPE INCLUDING ALL FITTINGS AND MEGA LUGS AND TIE-INS TO EXISTING WATER MAINS	L.F.	3380
33	24-INCH SMOOTH STEEL PIPE CASING - 3/8" WALL THICKNESS (OPEN CUT)	L.F.	138
34	FIRE HYDRANT COMPETE WITH 6-INCH GATE VALVE, VALVE BOX, D.I. PIPE, ETC. ON NEW MAIN	EA,	8
35	2-INCH TEMPORARY BLOW-OFF ASSEMBLY	EA	3
36	10-INCH X 10-INCH CUT-IN-TEE	EA.	1
37	6-INCH GATE VALVE, M.J. AND VALVE BOX COMPLETE	EA.	1
38	8-INCH GATE VALVE, M.J. AND VALVE BOX COMPLETE	EA.	5
39	10-INCH GATE VALVE, M.J. AND VALVE BOX COMPLETE	EA.	14
40	ADJUST EXISTING WATER VALVE BOXES TO MATCH FINISH GRADE	EA	4
41	CONCRETE VALVE APRON (2' x 2' x 6" Thick Pad)	EA	15
42	REMOVE EXISTING FIRE HYDRANT AND PLUG PIPE	EA.	1
43	8-INCH PVC, SDR 26, SANITARY SEWER PIPE (0' TO 6' DEPTH)	L.F.	240
44	8-INCH PVC, SDR 26, SANITARY SEWER PIPE (6' TO 8' DEPTH)	L.F.	140
45	SANITARY SEWER STANDARD FIBERGLASS MANHOLE	EA.	2
46	REMOVE & REPLACE EXISTING BRICK SANITARY SEWER MANHOLE WITH STANDARD FIBERGLASS MANHOLE INCLUDING ANY REQUIRED TEMPORARY PLUGGING, BY-PASS PUMPING AND ANY OTHER REQUIRED MISC. FITTINGS AND PIPE.	EA.	1
47	CONCRETE MANHOLE APRON (4' x 4' x 6" Thick Pad)	EA.	5
48	TRENCH SAFETY SYSTEM	L.F.	6680
49	STORM WATER POLLUTION PREVENTION PLAN (SW3P)	L.S.	1
50	SOIL RETENTION BLANKET - TxDOT SPEC ITEM 169 CL 1, TY C	S.Y.	200
51	AUTOMATIC GATE REMAOVAL AND RELOCATION	L.S.	1
52	OIL/WATER SEPARATOR INSTALLED IN STORM SEWER MANHOLES (ALL SIZES)	EA.	2
53	FILTER INSERTS INSTALLED IN CURB INLETS (ALL LENGTHS)	EA.	4
54	SIGNAGE	L.S.	1
55	CONSTRUCTION CONTINGENCY	L.S.	1

Lockwood, Andrews & Newnam, Inc.
STATE OF TEXAS
DAWN ANN GREEN
79721
LICENSED
PROFESSIONAL ENGINEER
Dawn Green 9-30-04

City of Kerrville
Main Street
Extension
Project

QUANTITY
SUMMARY SHEET

No.	Date	Revisions	App.

Scale: Date:
Designed by: T.C.
Drawn by: M.K.
Checked by: P.J.
Approved by: D.G.
Project No. 2178-20-001

C4

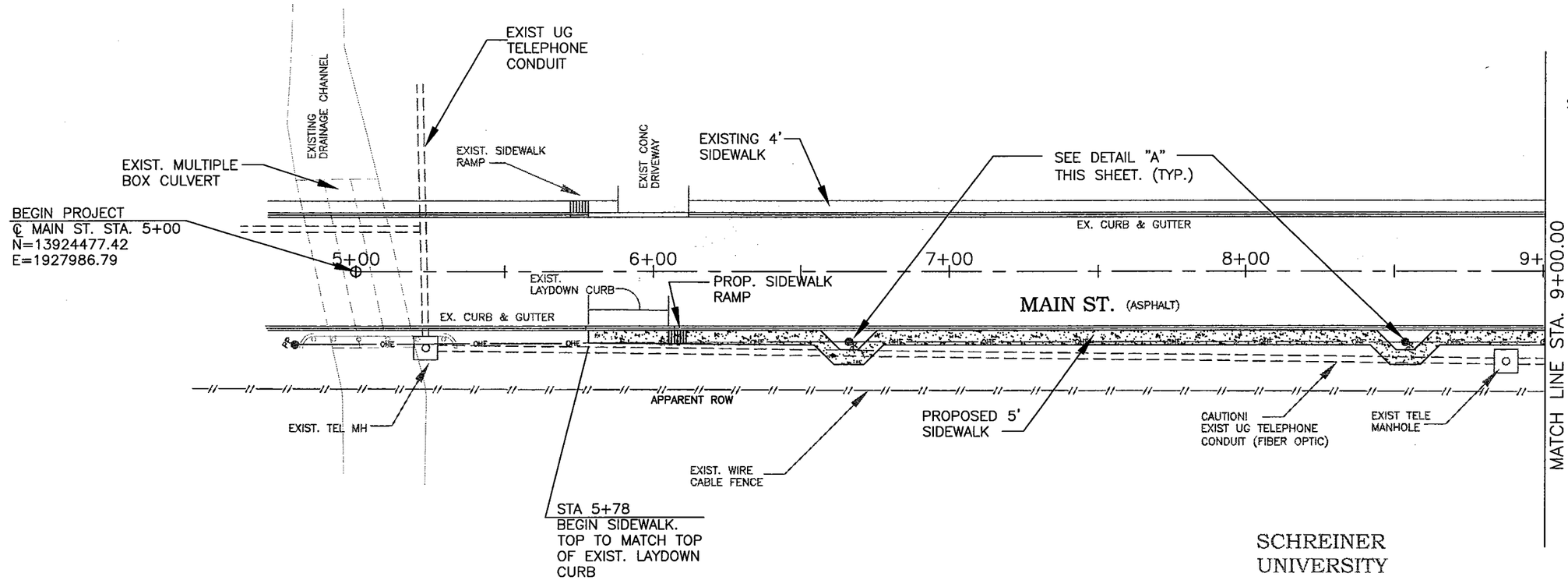

SCALE : 1" = 40' HORZ.
1" = 4' VERT.

NOTE: CONSTRUCTION BETWEEN STA. 5+00 AND 12+29 CONSISTS OF SIDEWALK ONLY. CONTRACTOR SHALL REPAIR ANY OTHER ITEMS DISTURBED BY CONSTRUCTION TO EXISTING OR BETTER CONDITION.

NOTE:
1) ALL DIMENSIONS AND COORDINATES ARE TO BACK OF CURB UNLESS OTHERWISE NOTED.

PNT	NORTHING	EASTING
145	13924477.42	1927986.79

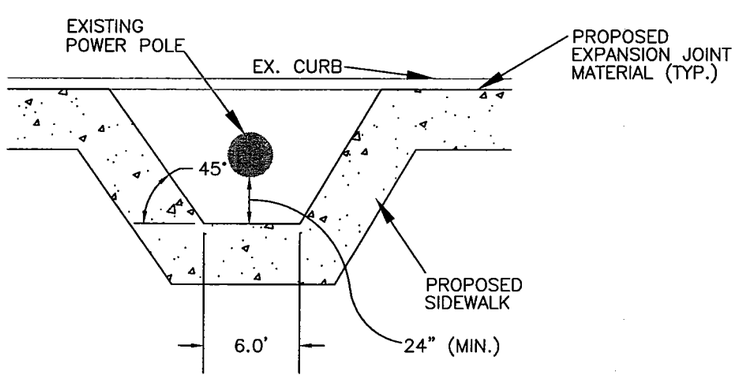

DETAIL "A"
N.T.S.

LEGEND FOR PLAN & PROFILE SHEETS

LEGEND

- PROPOSED SIDEWALK
- OHE — EXISTING OVERHEAD ELECTRIC
- PROPOSED BACK OF CURB / PROPOSED GUTTER LINE
- 1631 — EXISTING CONTOURS
- W — PROPOSED WATER LINES
- SS — PROPOSED SANITARY SEWER LINES
- PP — EXISTING POWER POLE
- RIGHT OF WAY LINE
- PROPOSED CENTERLINE OF ROAD
- EXIST. WIRE CABLE FENCE
- PROP. STORM SEWER PIPE
- 18" Oak — EXISTING TREES
- 2" GAS — EXISTING GAS LINES
- X — EXISTING BARB-WIRE FENCE
- 1634.10 — PROPOSED GRADE

Lockwood, Andrews & Newnam, Inc.

STATE OF TEXAS — DAWN ANN GREEN — 79721 — LICENSED PROFESSIONAL ENGINEER

City of Kerrville
Main Street Extension Project

MAIN STREET PLAN SHEET
STA. 5+00 TO STA. 9+00

No.	Date	Revisions	App.

Scale 1" = 40' Date: Aug. 2004
Designed by: T.C.
Drawn by: M.K.
Checked by: P.J.
Approved by: D.G.
Project No. 2178-20-001

C5

L:\119731\120-02178-005\PROD\5_0_DESIGN-REFERENCE\5_13_DRAWINGS\FINAL PLANS\C04.DWG

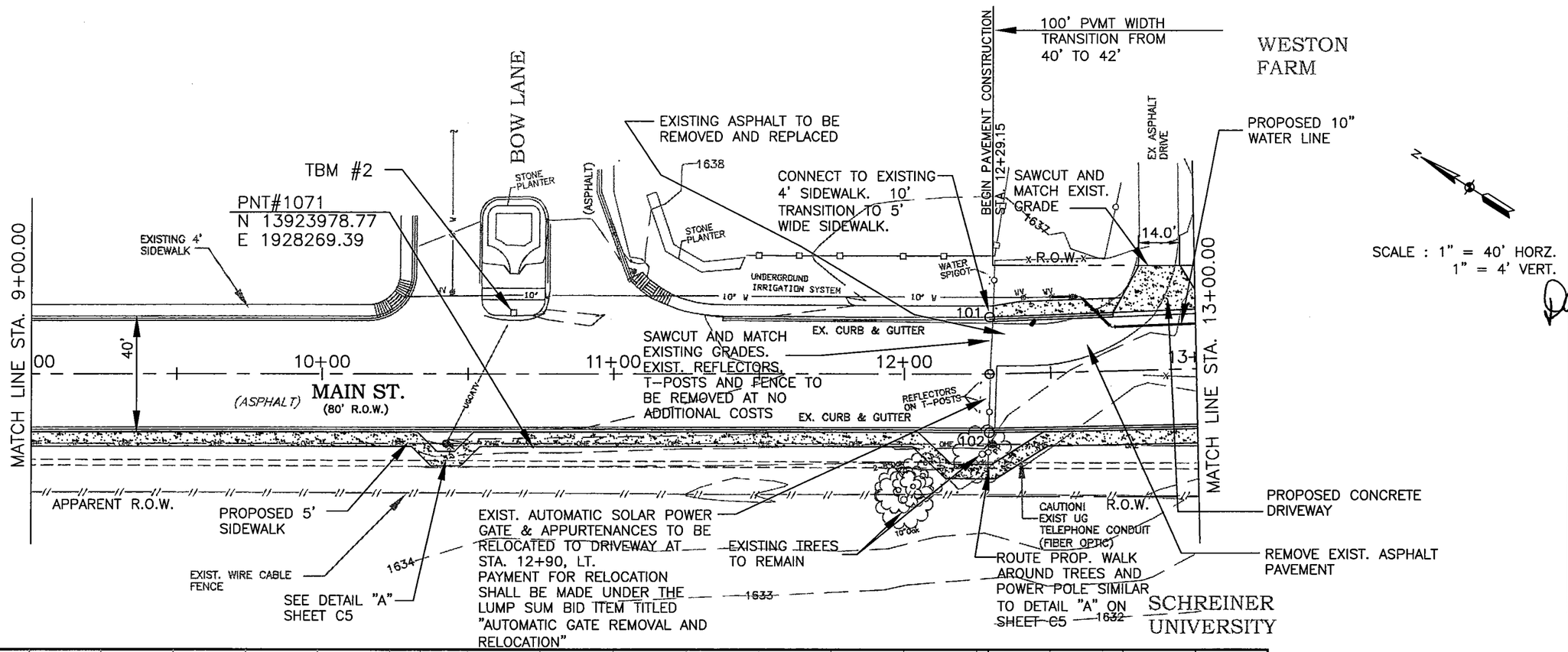

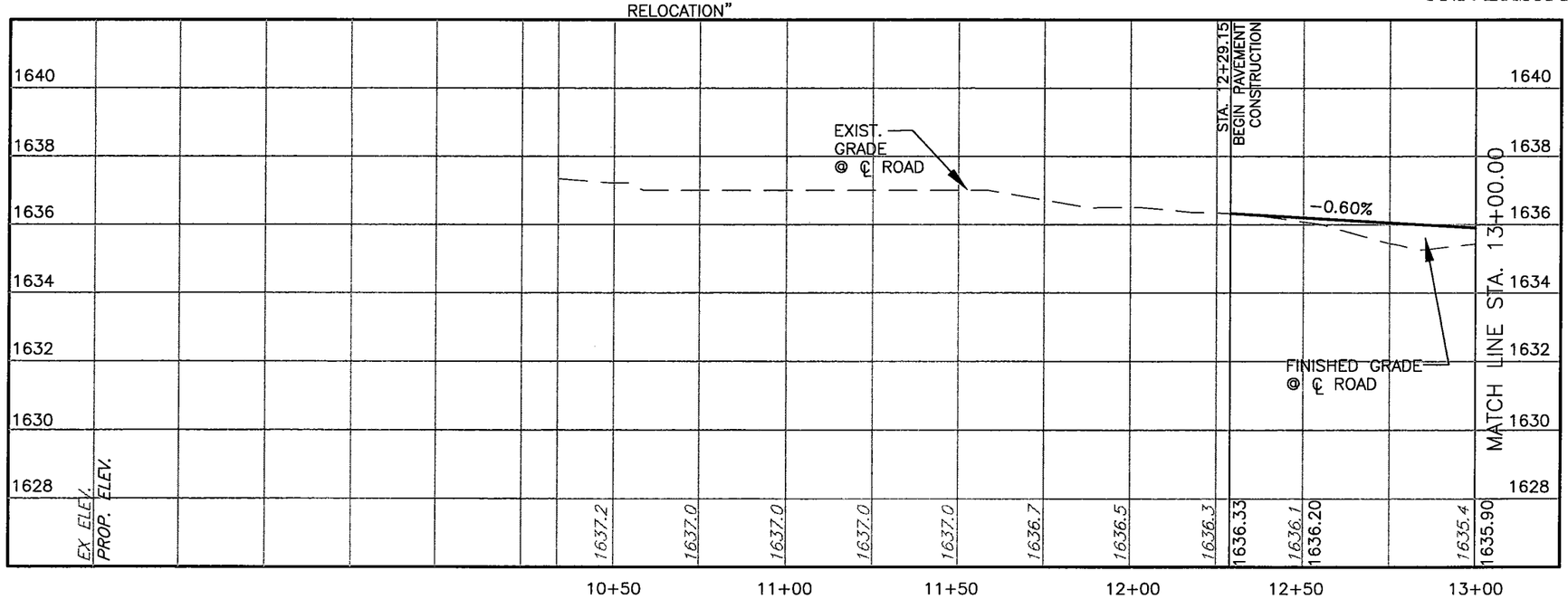

PNT	NORTHING	EASTING
101	13923869.87	1928390.71
102	13923848.82	1928356.69
141	13923859.54	1928373.95

NOTE:
1) ALL DIMENSIONS AND COORDINATES ARE TO BACK OF CURB UNLESS OTHERWISE NOTED.
2) SEE WATER PLANS FOR DETAILS OF WATER LINE.

Lockwood, Andrews & Newnam, Inc.

STATE OF TEXAS
DAWN ANN GREEN
79721
LICENSED
PROFESSIONAL ENGINEER

Dawn Green 9-30-04

City of Kerrville
Main Street
Extension
Project

MAIN STREET
PLAN & PROFILE SHEET
STA. 9+00 TO
STA. 13+00

No.	Date	Revisions	App.

Scale: 1" = 40' Date: Aug. 2004
Designed by: T.C.
Drawn by: M.K.
Checked by: P.J.
Approved by: D.G.
Project No. 2178-20-001

C6

L:\119731\120-02178-005\PROD\5_0_DESIGN-REFERENCE\5_13_DRAWINGS\C05.DWG

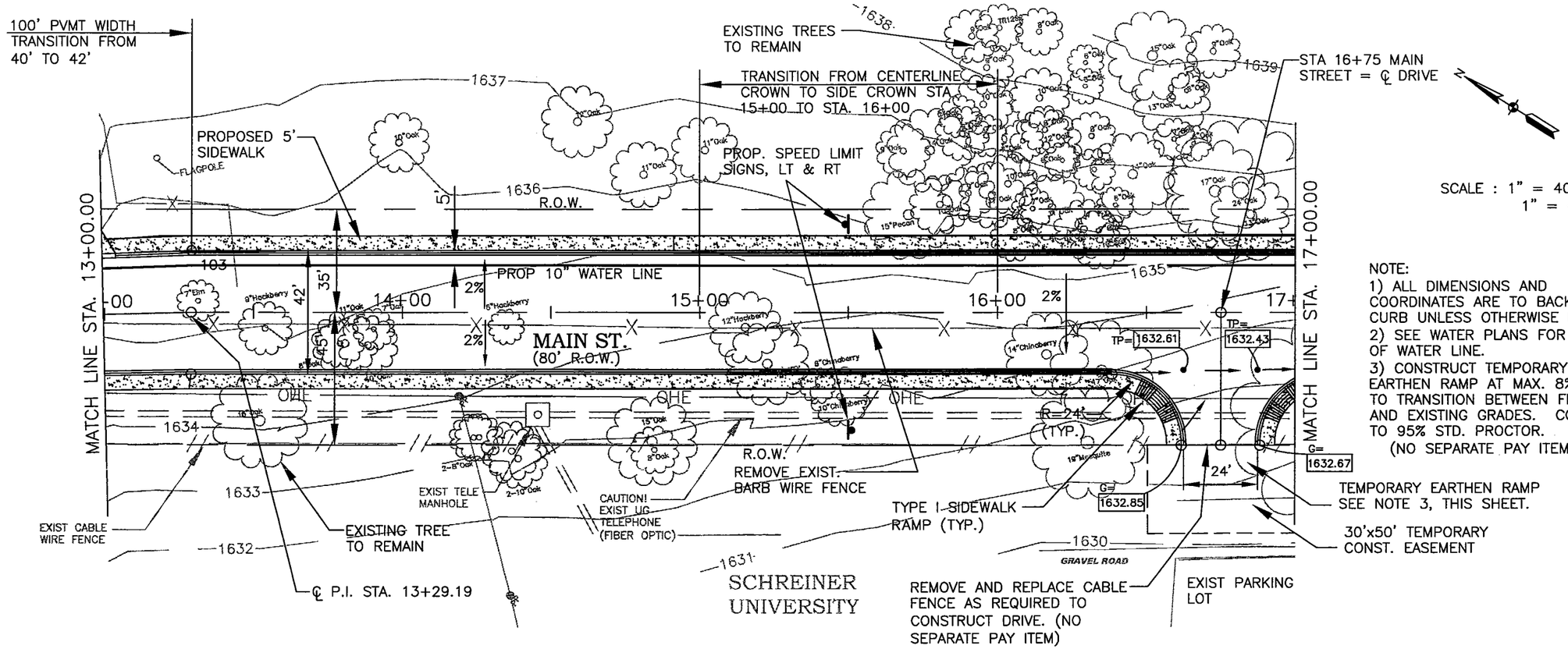

NOTE:
1) ALL DIMENSIONS AND COORDINATES ARE TO BACK OF CURB UNLESS OTHERWISE NOTED.
2) SEE WATER PLANS FOR DETAILS OF WATER LINE.
3) CONSTRUCT TEMPORARY EARTHEN RAMP AT MAX. 8% SLOPE TO TRANSITION BETWEEN FINISHED AND EXISTING GRADES. COMPACT TO 95% STD. PROCTOR. (NO SEPARATE PAY ITEM)

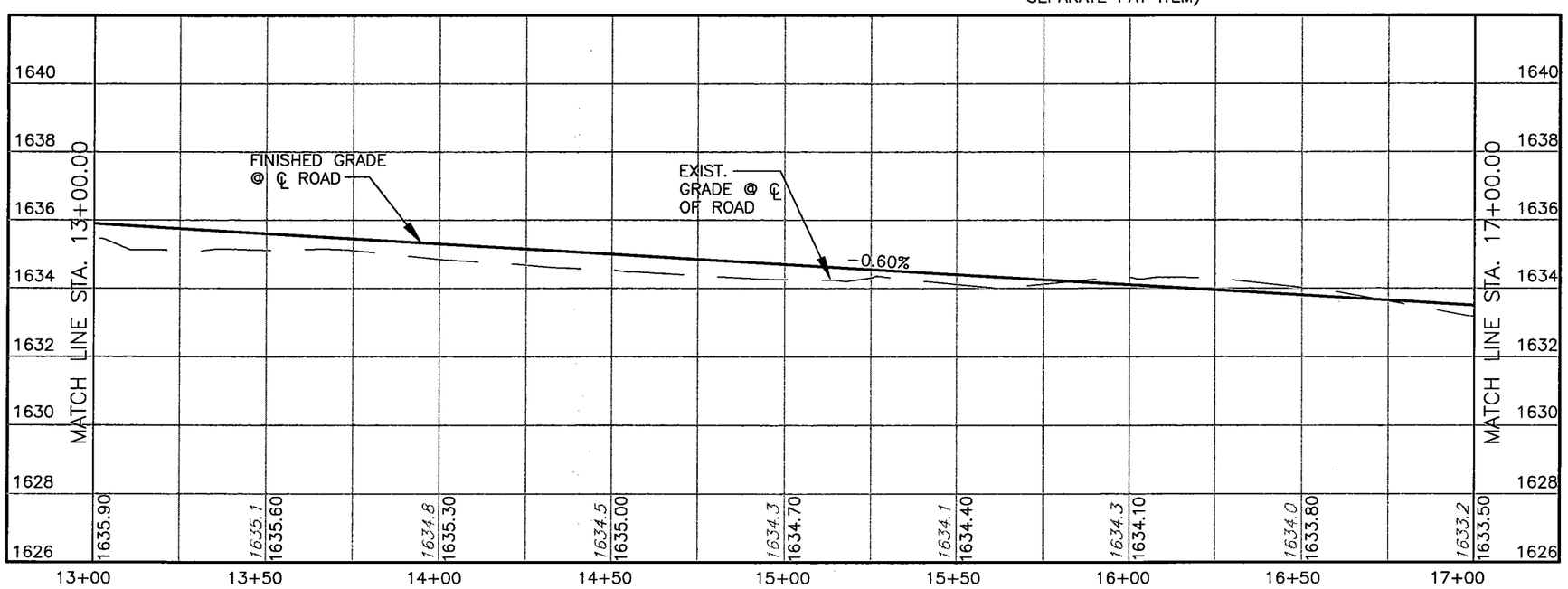

PNT	NORTHING	EASTING
103	13923787.29	1928447.04
132	13923765.04	1928411.42
133	13923502.29	1928575.58
134	13923469.22	1928567.94
135	13923448.87	1928580.65
146	13923482.89	1928612.46
147	13923459.00	1928574.23
200	13923776.16	1928429.23

Lockwood, Andrews & Newnam, Inc.

STATE OF TEXAS — JOHN ANI GREEN — 79721 — LICENSED PROFESSIONAL ENGINEER

City of Kerrville
Main Street Extension Project

MAIN STREET
PLAN & PROFILE SHEET
STA. 13+00 TO STA. 17+00

No.	Date	Revisions	App.

Scale: 1" = 40' Date: Aug. 2004
Designed by: T.C.
Drawn by: M.K.
Checked by: P.J.
Approved by: D.G.
Project No. 2178-20-001

C7

L:\19731\120-02178-005\PROD\5_0_DESIGN-REFERENCE\5_13_DRAWINGS\C06.DWG

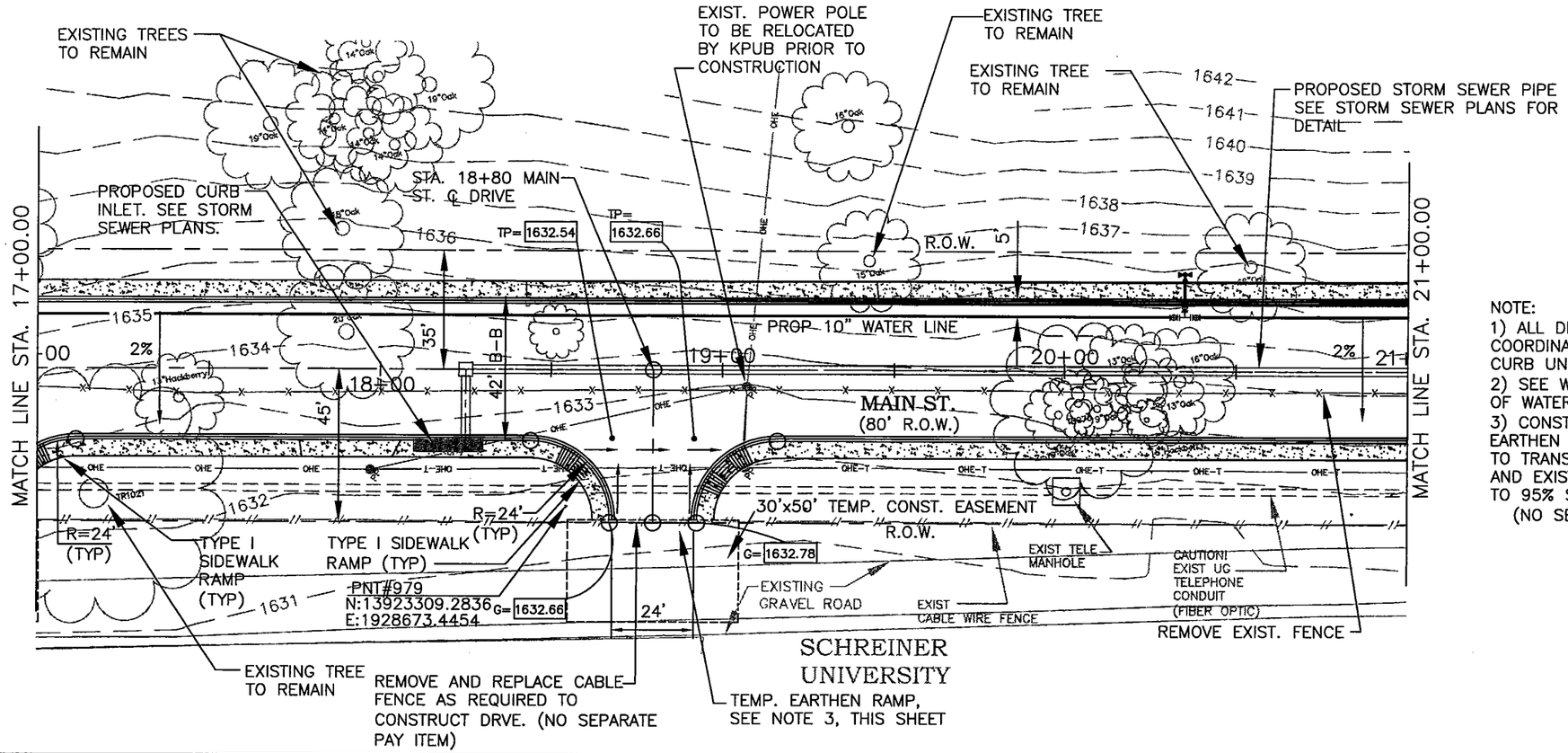

SCALE : 1" = 40' HORZ.
1" = 4' VERT.

NOTE:
1) ALL DIMENSIONS AND COORDINATES ARE TO BACK OF CURB UNLESS OTHERWISE NOTED.
2) SEE WATER PLANS FOR DETAILS OF WATER LINE.
3) CONSTRUCT TEMPORARY EARTHEN RAMP AT MAX. 8% SLOPE TO TRANSITION BETWEEN FINISHED AND EXISTING GRADES. COMPACT TO 95% STD. PROCTOR.
(NO SEPARATE PAY ITEM)

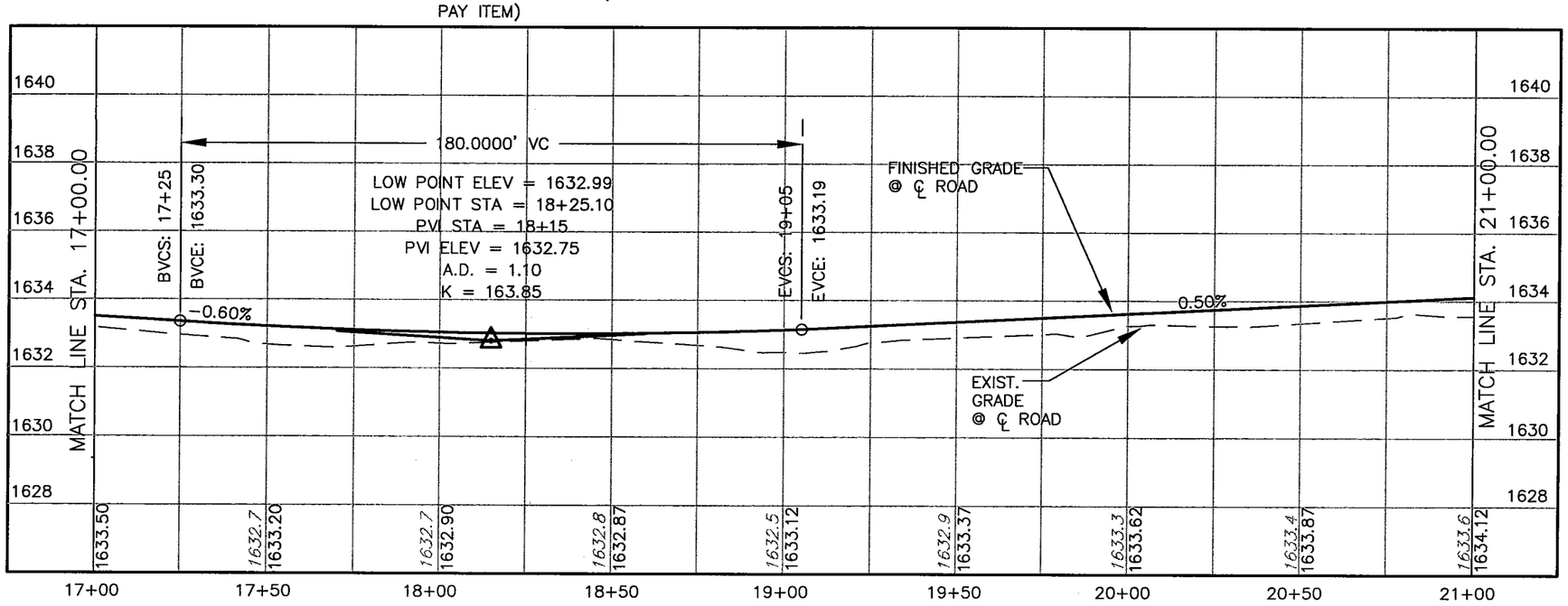

PNT	NORTHING	EASTING
136	13923441.23	1928613.73
201	13923328.43	1928684.20
202	13923295.36	1928676.56
203	13923275.01	1928689.28
204	13923267.37	1928722.35
205	13923309.03	1928721.08
206	13923285.15	1928682.85

Lockwood, Andrews & Newnam, Inc.

STATE OF TEXAS
DAN ANN GREEN
79721
LICENSED PROFESSIONAL ENGINEER

City of Kerrville
Main Street Extension Project

MAIN STREET
PLAN & PROFILE SHEET
STA. 17+00 TO STA. 21+00

No.	Date	Revisions	App.

Scale: 1" = 40' Date: Aug. 2004
Designed by: T.C.
Drawn by: M.K.
Checked by: P.J.
Approved by: D.G.
Project No. 2178-20-001

C8

L:\19731\120-02178-005\PROD\5_0_DESIGN-REFERENCE\5_13_DRAWINGS\C07.DWG

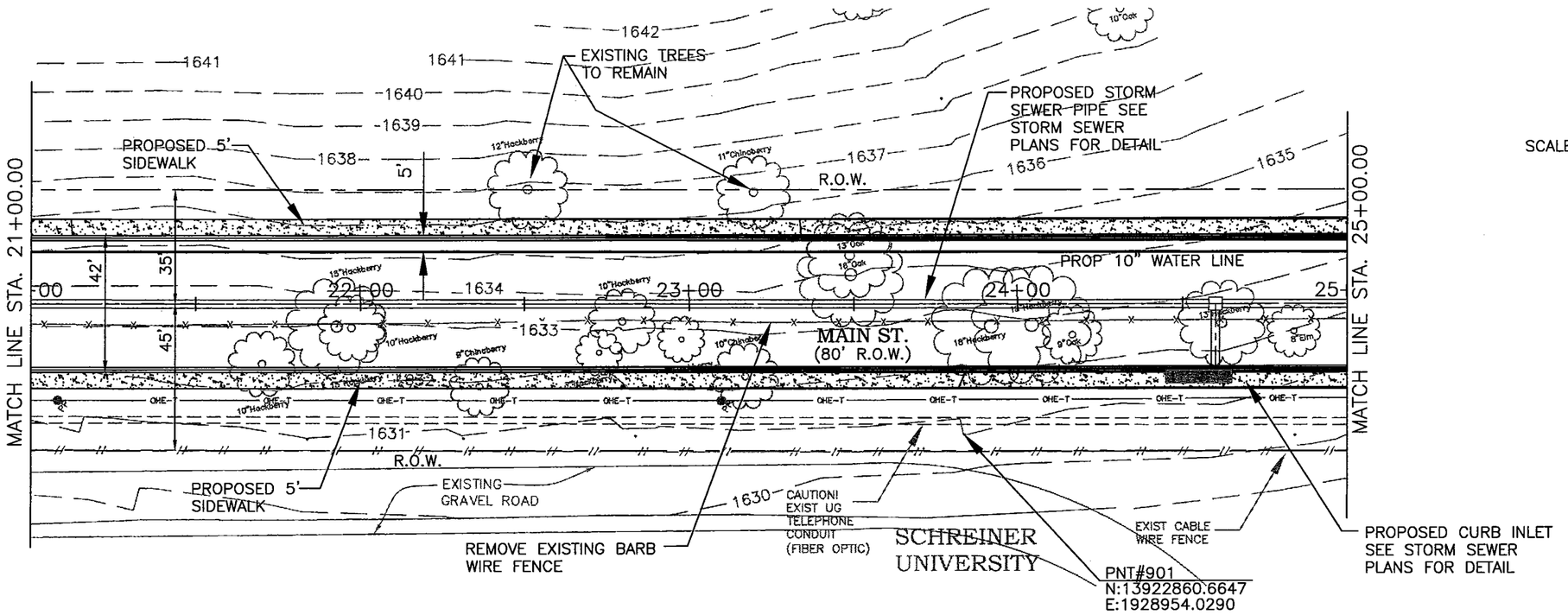

SCALE : 1" = 40' HORZ.
1" = 4' VERT.

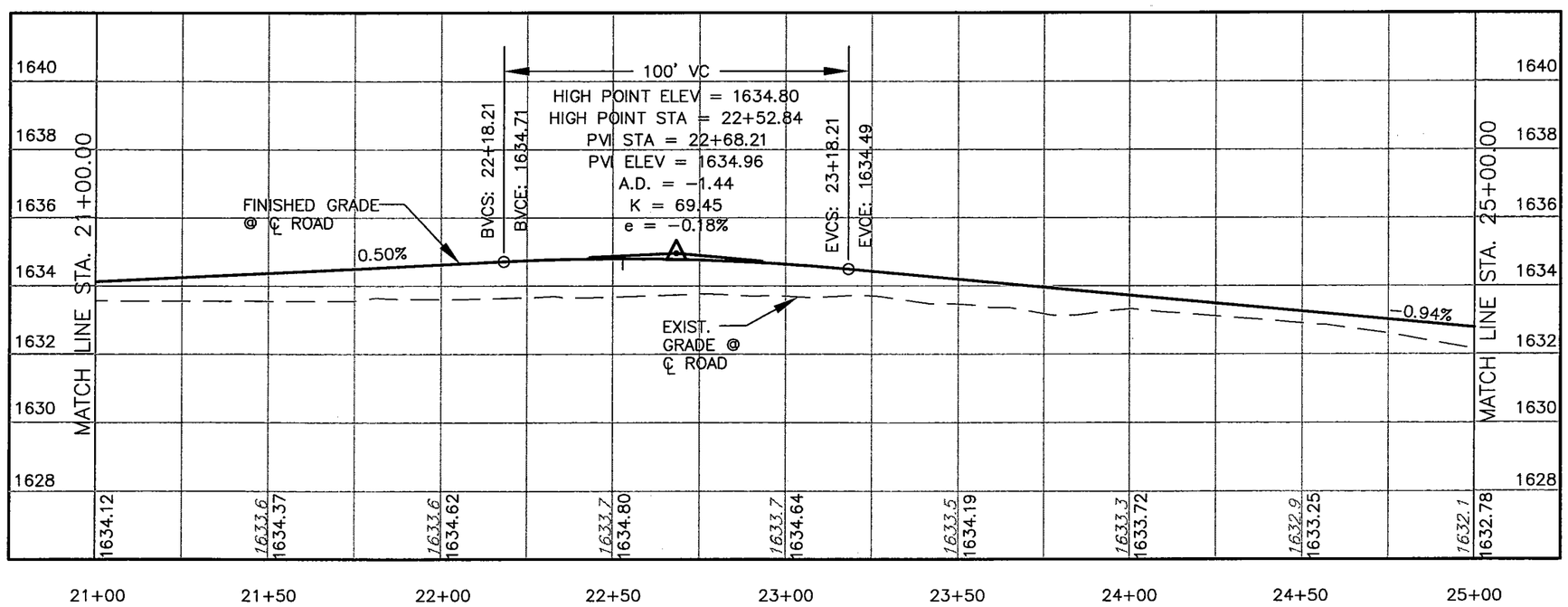

NOTE:
1) ALL DIMENSIONS AND COORDINATES ARE TO BACK OF CURB UNLESS OTHERWISE NOTED.
2) SEE WATER PLANS FOR DETAILS OF WATER LINE.

Lockwood, Andrews & Newnam, Inc.

STATE OF TEXAS
DAN AN GEEN
79721
LICENSED
PROFESSIONAL ENGINEER

Dan Green 9-30-04

City of Kerrville
Main Street
Extension
Project

MAIN STREET
PLAN & PROFILE SHEET
STA. 21+00 TO
STA. 25+00

No.	Date	Revisions	App.

Scale 1" = 40' Date: Aug. 2004
Designed by T.C.
Drawn by M.K.
Checked by P.J.
Approved by D.G.
Project No. 2178-20-001

C9

L:\19731\120-02178-005\PROD\5_0_DESIGN-REFERENCE\5_13_DRAWINGS\C08.DWG

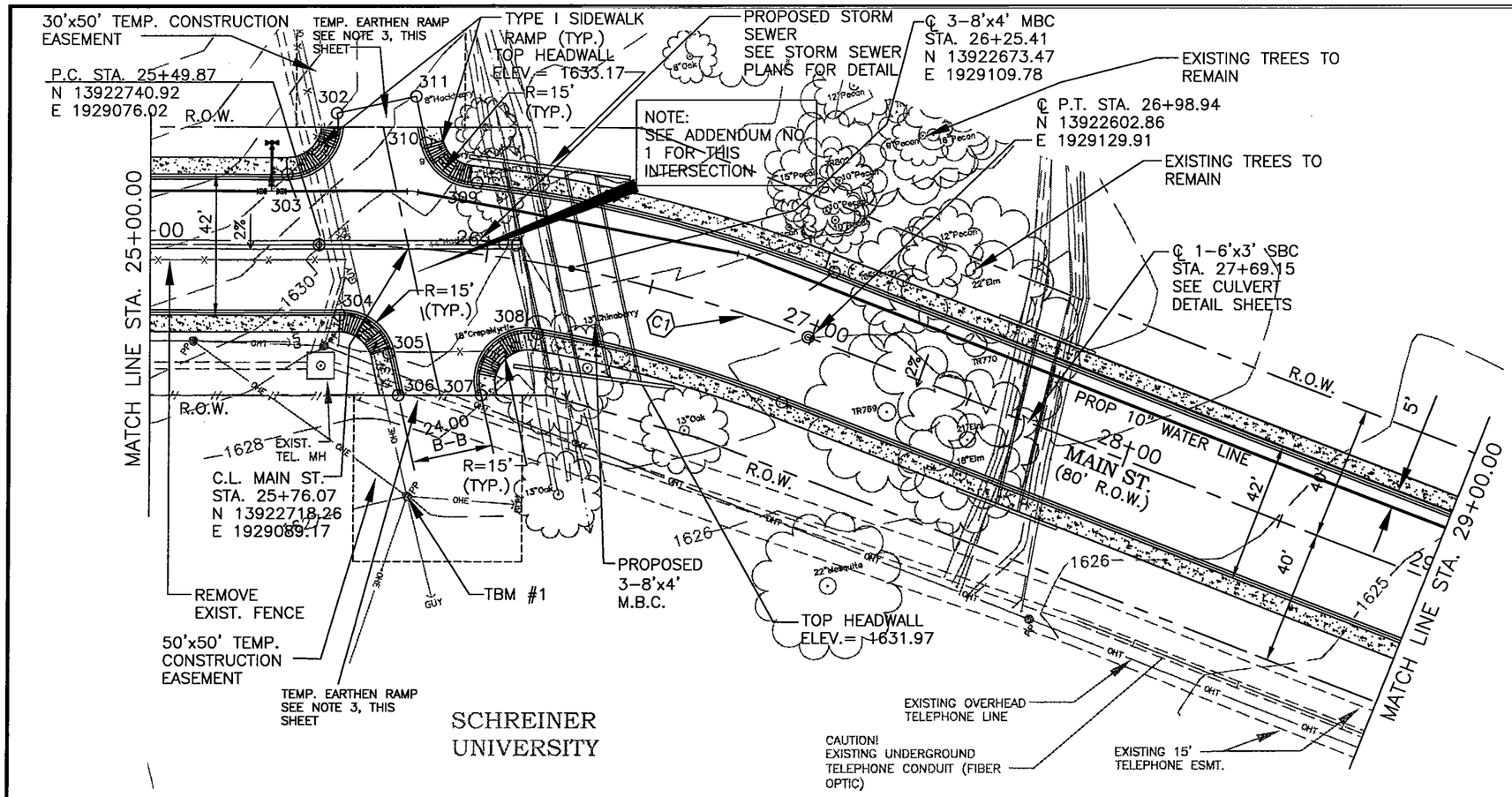

SCALE : 1" = 40' HORZ.
1" = 4' VERT.

NOTE:
1) ALL DIMENSIONS AND COORDINATES ARE TO BACK OF CURB UNLESS OTHERWISE NOTED.
2) SEE WATER PLANS FOR DETAILS OF WATER LINE.
3) CONSTRUCT TEMPORARY EARTHEN RAMP AT MAX. 8% SLOPE TO TRANSITION BETWEEN FINISHED AND EXISTING GRADES. COMPACT TO 95% STD. PROCTOR. (NO SEPARATE PAY ITEM)
4) FOR GRADES ON RETURNS AND END OF CONST. FOR CROSS STREET SEE TABLE, THIS SHEET.
5) FROM STA. 25+00 TO STA. 29+00 REQUIRES A SOIL RETENTION BLANKET.

CURVE DATA TABLE					
CURVE	DELTA	RADIUS	TANGENT	LENTGH	CHORD
C1	21°21'11"	400.00	75.41	149.07	148.21

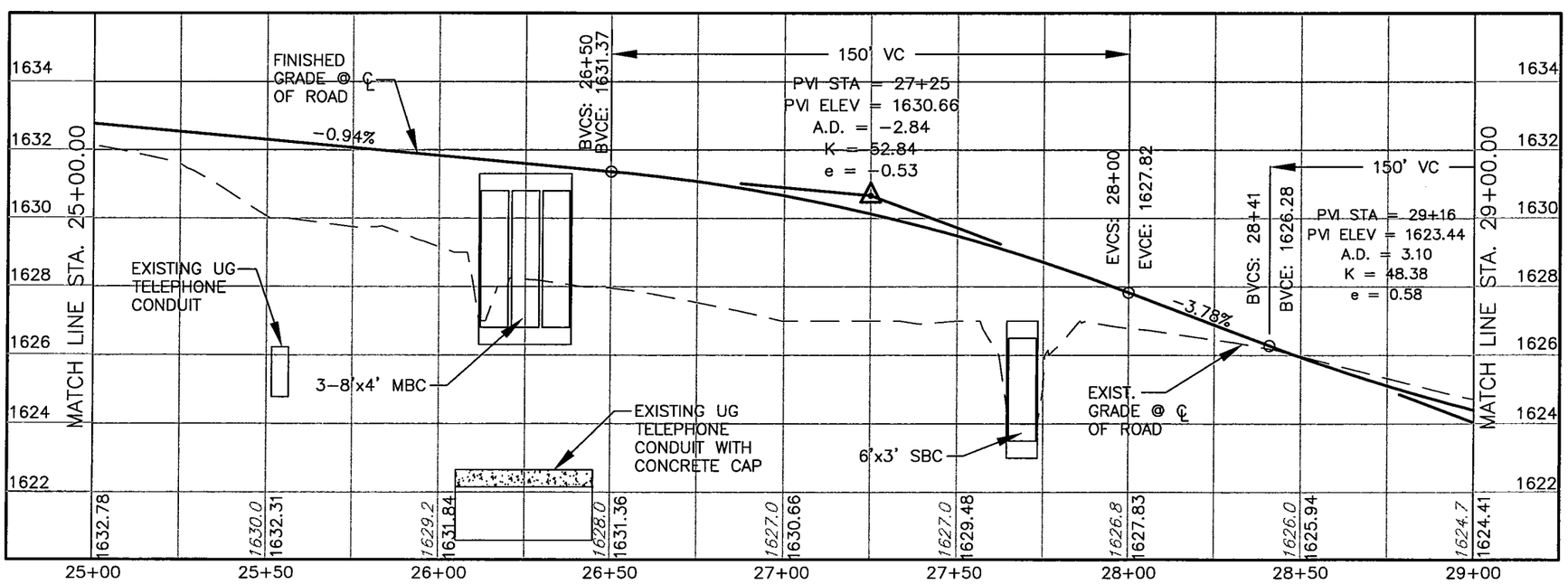

POINT TABLE			
PNT	NORTHING	EASTING	GRADE
109	13922606.74	1929150.54	
115	13922598.98	1929109.27	
150	13922602.86	1929129.91	
151	13922740.92	1929076.02	
302	13922757.18	1929112.04	1633.45
303	13922759.99	1929088.87	
304	13922724.35	1929061.55	
305	13922705.85	1929059.15	1631.45
306	13922697.17	1929050.21	1630.57
307	13922676.72	1929063.59	1630.98
308	13922671.60	1929087.93	
309	13922712.78	1929115.55	
310	13922730.10	1929118.60	1632.20
311	13922739.93	1929128.73	1632.90

Lockwood, Andrews & Newnam, Inc.

STATE OF TEXAS
DAWN ANN GREEN
79721
LICENSED
PROFESSIONAL ENGINEER

City of Kerrville
Main Street Extension Project

MAIN STREET
PLAN & PROFILE SHEET
STA. 25+00 TO STA. 29+00

No.	Date	Revisions	App.

Scale: 1" = 40' Date: Aug. 2004
Designed by: T.C.
Drawn by: M.K.
Checked by: P.J.
Approved by: D.G.
Project No. 2178-20-001

C10

L:\119731\120-02178-005\PROD\5_0_DESIGN-REFERENCE\5_13_DRAWINGS\C09.DWG

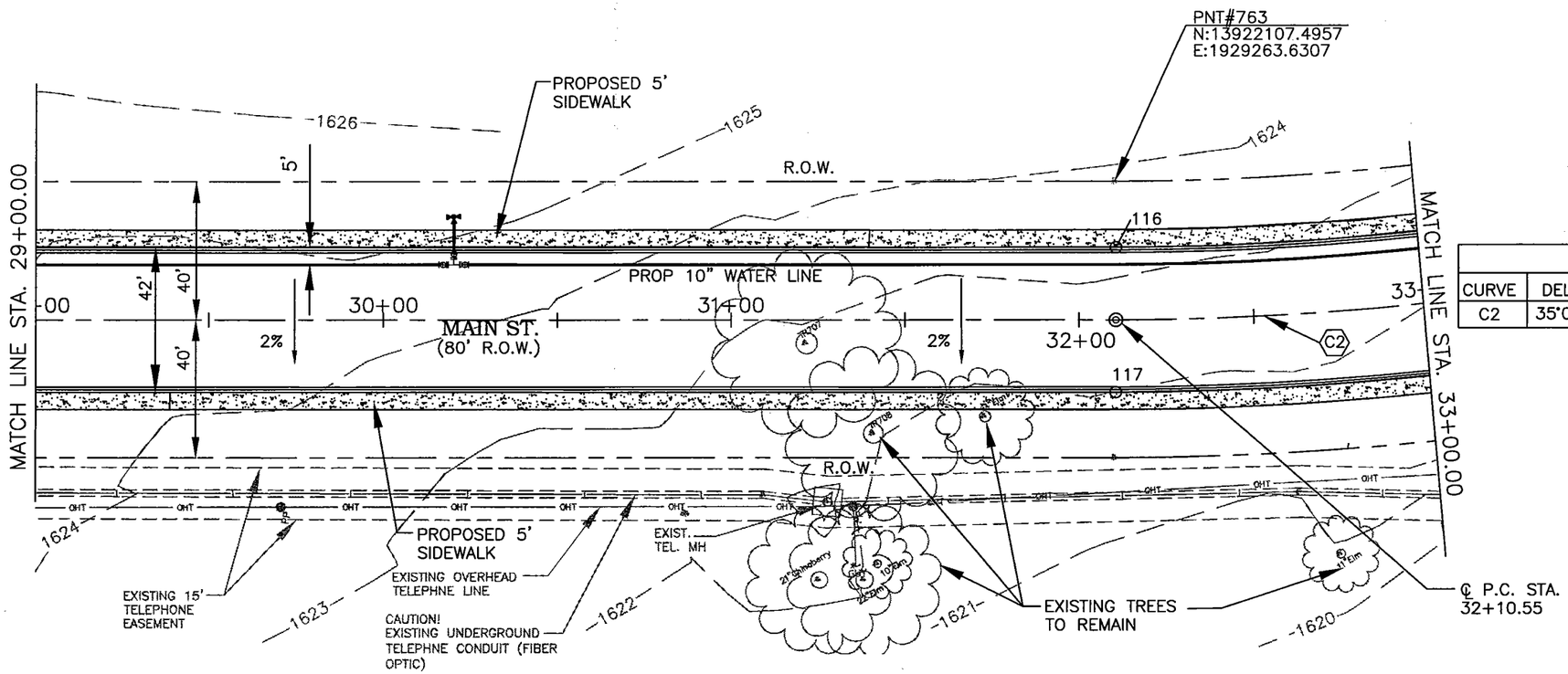

SCALE : 1" = 40' HORZ.
1" = 4' VERT.

CURVE DATA TABLE					
CURVE	DELTA	RADIUS	TANGENT	LENTGH	CHORD
C2	35°03'52"	844.20	266.70	516.64	508.61

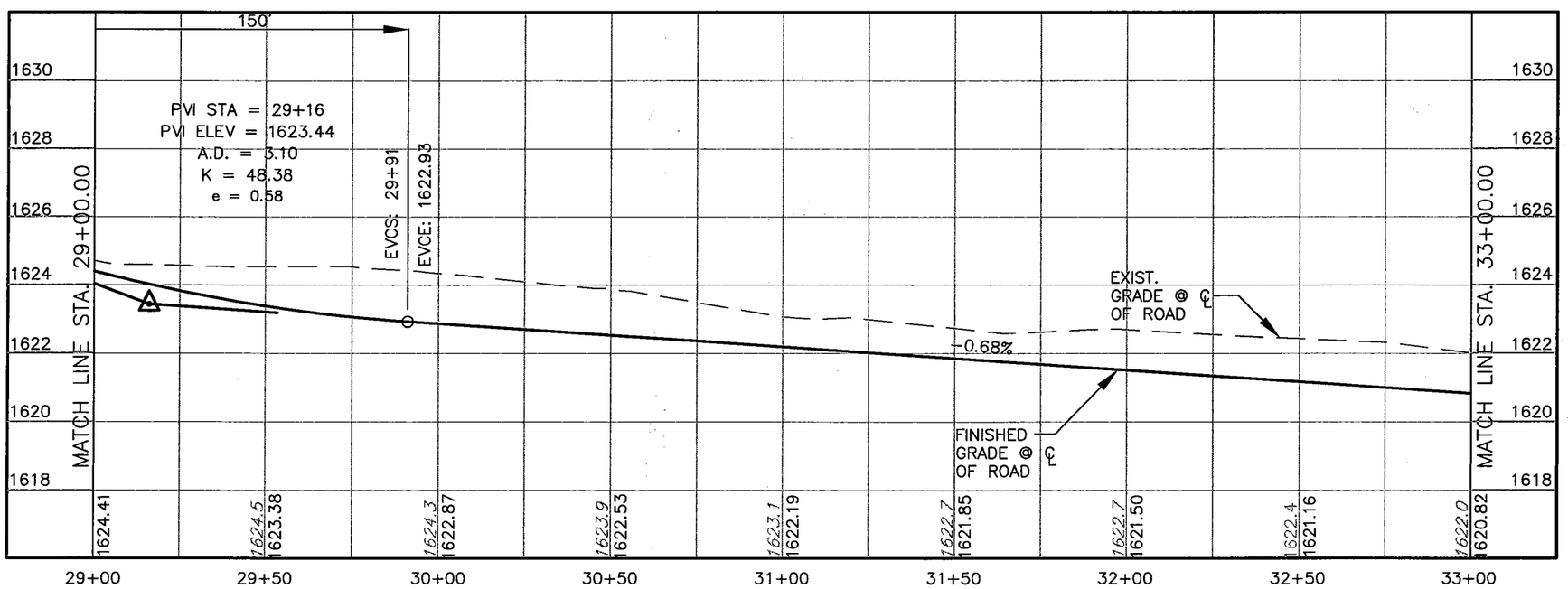

POINT TABLE		
PNT	NORTHING	EASTING
116	13922103.93	1929245.03
117	13922096.18	1929203.76
155	13922100.06	1929224.39

NOTE:
1) ALL DIMENSIONS AND COORDINATES ARE TO BACK OF CURB UNLESS OTHERWISE NOTED.
2) SEE WATER PLANS FOR DETAILS OF WATER LINE.

Lockwood, Andrews & Newnam, Inc.

STATE OF TEXAS
DAWN ANN GREEN
79721
LICENSED
PROFESSIONAL ENGINEER

9-30-04

City of Kerrville
Main Street
Extension
Project

MAIN STREET
PLAN & PROFILE SHEET
STA. 29+00 TO
STA. 33+00

No.	Date	Revisions	App.

Scale 1" = 40' Date: Aug. 2004
Designed by: T.C.
Drawn by: M.K.
Checked by: P.J.
Approved by: D.G.
Project No. 2178-20-001

C11

L:\119731\120-02178-005\PROD\5_0_DESIGN-REFERENCE\5_13_DRAWINGS\C10.DWG

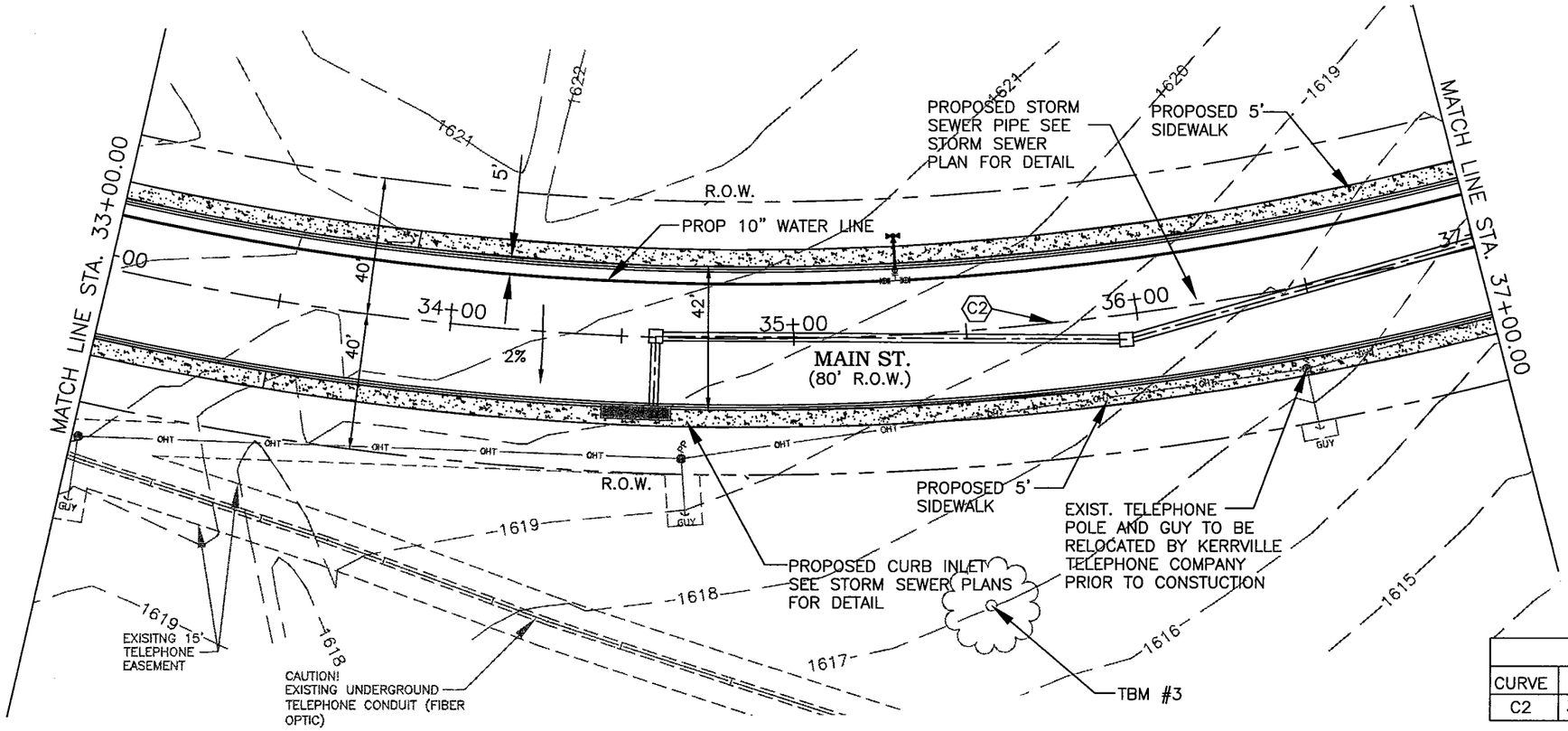

SCALE : 1" = 40' HORZ.
1" = 4' VERT.

CURVE DATA TABLE					
CURVE	DELTA	RADIUS	TANGENT	LENTGH	CHORD
C2	35°03'52"	844.20	266.69	516.64	508.61

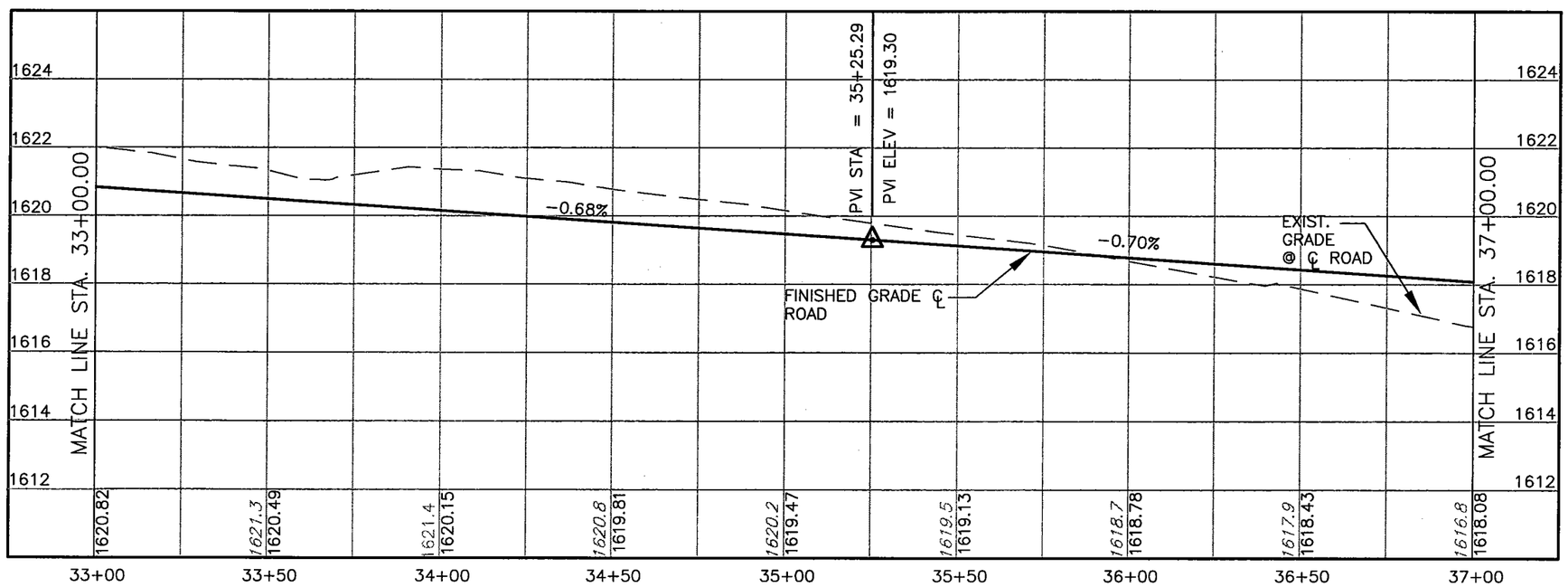

NOTE:
1) ALL DIMENSIONS AND COORDINATES ARE TO BACK OF CURB UNLESS OTHERWISE NOTED.
2) SEE WATER PLANS FOR DETAILS OF WATER LINE.

Lockwood, Andrews & Newnam, Inc.

STATE OF TEXAS
DAWN ANN GREEN
79721
LICENSED
PROFESSIONAL ENGINEER

Dawn Green 9-30-04

City of Kerrville
Main Street
Extension
Project

MAIN STREET
PLAN & PROFILE SHEET
STA. 33+00 TO
STA. 37+00

No.	Date	Revisions	App.

Scale: 1" = 40' Date: Aug. 2004
Designed by: T.C.
Drawn by: M.K.
Checked by: P.J.
Approved by: D.G.
Project No. 2178-20-001

C12

L:\119731\120-02178-005\PROD\5_0_DESIGN-REFERENCE\5_13_DRAWINGS\C11.DWG

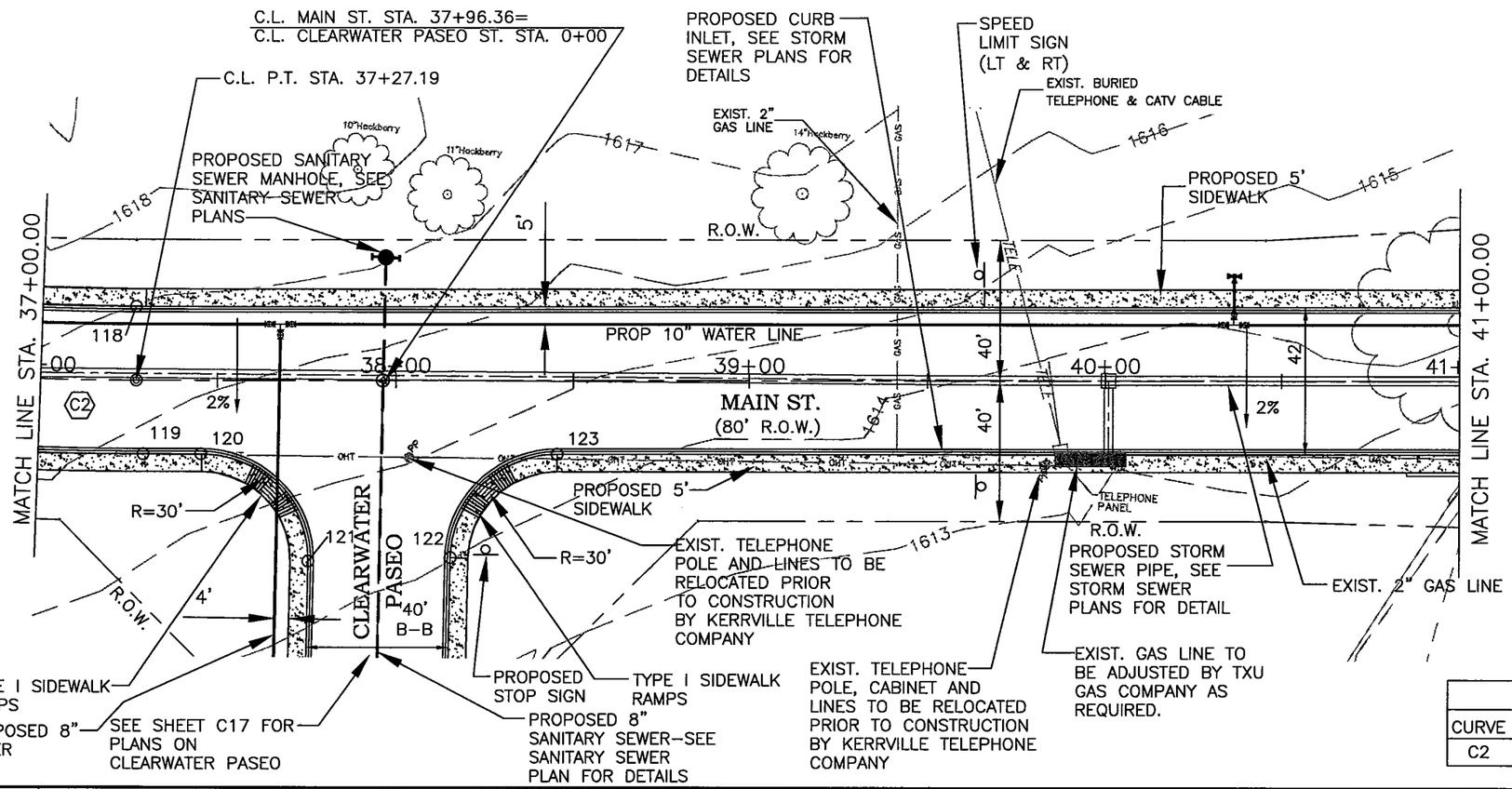

SCALE : 1" = 40' HORZ.
1" = 4' VERT.

NOTE:
1) ALL DIMENSIONS AND COORDINATES ARE TO BACK OF CURB UNLESS OTHERWISE NOTED.
2) SEE WATER PLANS FOR DETAILS OF WATER LINE.
3) FROM STA. 36+50 TO STA. 44+50 REQUIRES A SOIL RETENTION BLANKET.

CURVE DATA TABLE					
CURVE	DELTA	RADIUS	TANGENT	LENTGH	CHORD
C2	35°03'52"	844.2	266.69	516.64	508.61

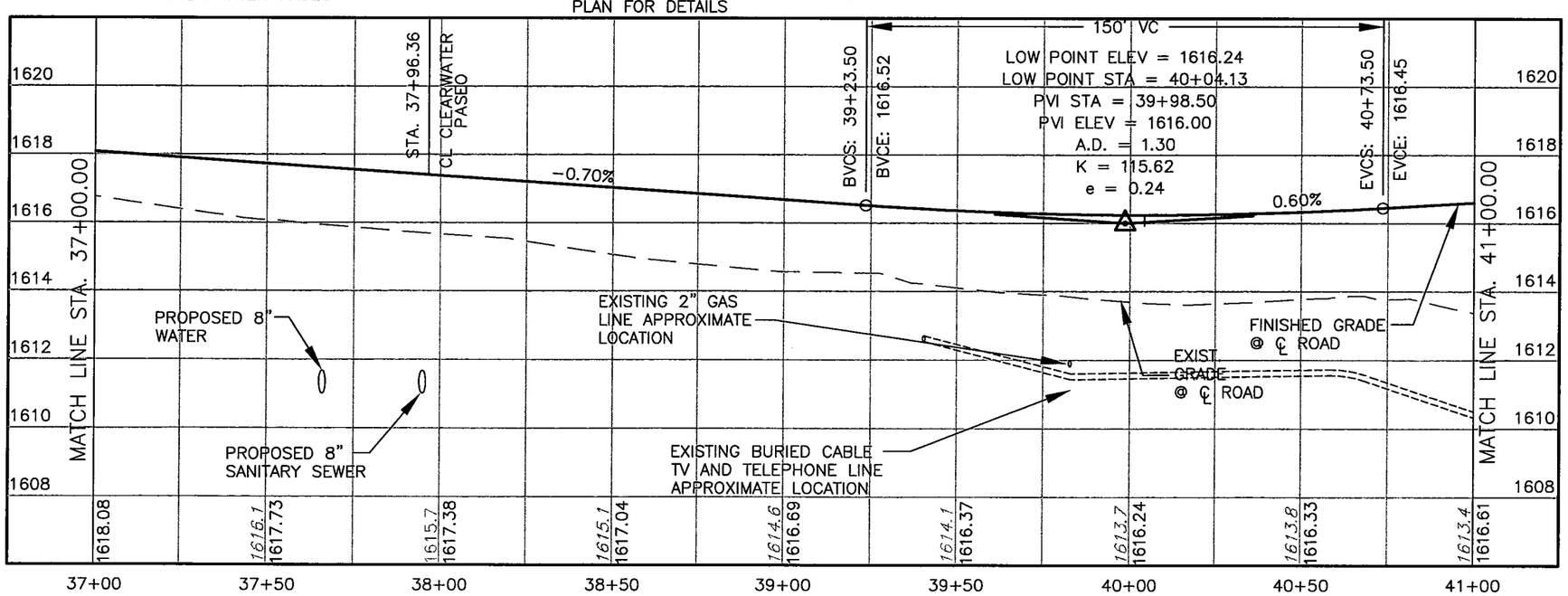

POINT TABLE		
PNT	NORTHING	EASTING
118	13921666.74	1929479.21
119	13921636.67	1929449.88
120	13921623.90	1929462.97
121	13921581.11	1929463.13
122	13921553.90	1929492.51
123	13921554.06	1929534.56
148	13921603.40	1929514.06
312	13921651.71	1929464.55

Lockwood, Andrews & Newnam, Inc.

STATE OF TEXAS
DAWN ANN GREEN
79721
LICENSED
PROFESSIONAL ENGINEER

Dawn Green 9-30-04

City of Kerrville
Main Street Extension Project

MAIN STREET
PLAN & PROFILE SHEET
STA. 37+00 TO STA. 41+00

No.	Date	Revisions	App.

Scale:
Date:
Designed by: T.C.
Drawn by: M.K.
Checked by: P.J.
Approved by: D.G.
Project No. 2178-20-001

C13

L:\119731\120-02178-005\PROD\5_0_DESIGN-REFERENCE\5_13_DRAWINGS\C12.DWG

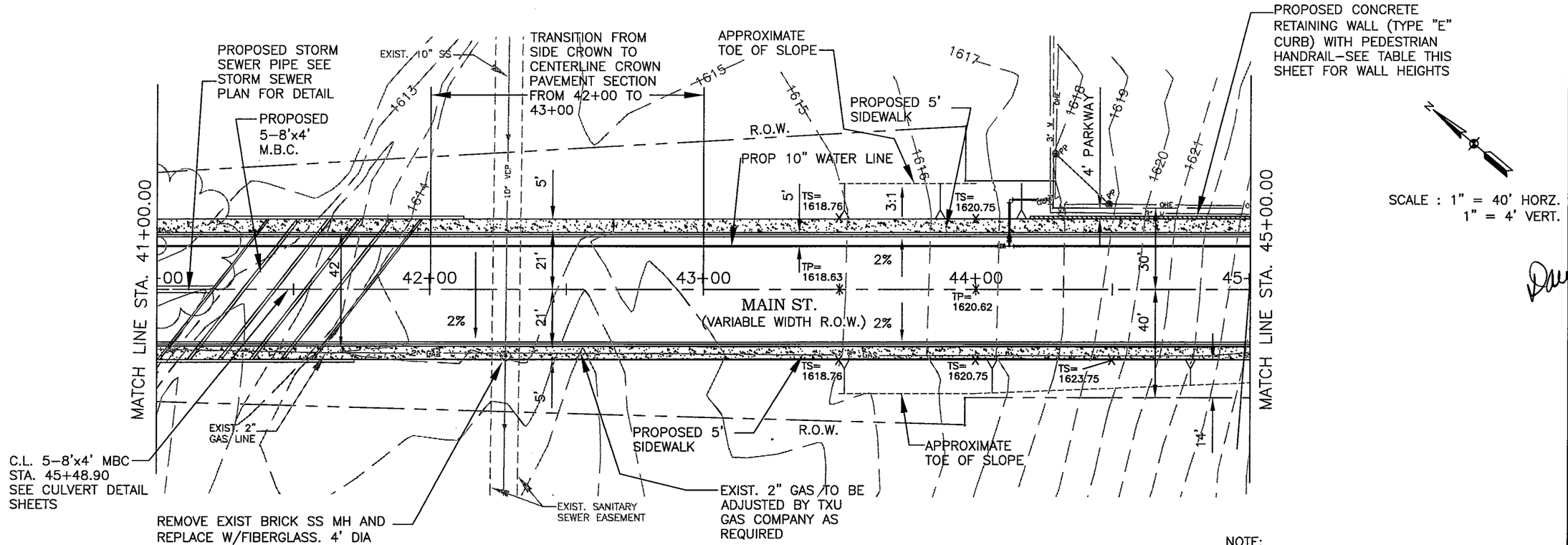

NOTE:
1) ALL DIMENSIONS AND COORDINATES ARE TO BACK OF CURB UNLESS OTHERWISE NOTED.
2) SEE WATER PLANS FOR DETAILS OF WATER LINE.
3) FROM STA. 36+50 TO STA. 44+50 REQUIRES A SOIL RETENTION BLANKET.

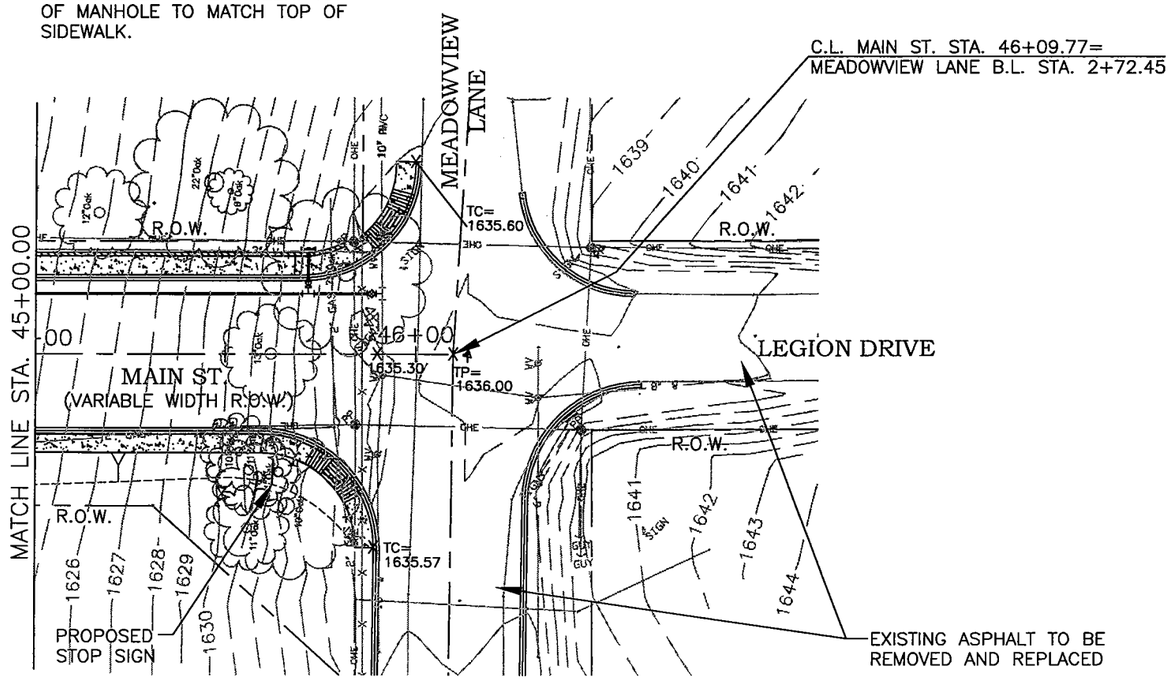

RETAINING WALL STA. 44+20 TO STA. 45+80 (LT)			
STATION	TOP WALL	BOTTOM WALL	HIEGHT
44+20	1622.41	1617.5	4.3'
44+50	1624.33	1619.00	4.8'
45+00	1628.33	1623.20	4.6'
45+50	1633.02	1629.10	3.3'
45+80	1635.30	1634.80	0.1'

SEE SHEET C15 FOR PROFILE

Lockwood, Andrews & Newnam, Inc.

STATE OF TEXAS
DAWN ANN GREEN
79721
LICENSED
PROFESSIONAL ENGINEER

Dawn Green 9-30-04

City of Kerrville
Main Street
Extension
Project

MAIN STREET PLAN SHEET
STA. 41+00 TO
STA. 46+00

No.	Date	Revisions	App.

Scale 1" = 40' Date: Aug. 2004
Designed by T.C.
Drawn by M.K.
Checked by P.J.
Approved by D.G.
Project No. 2178-20-001

C14

L:\119731\120-02178-005\PROD\5_0_DESIGN-REFERENCE\5_13_DRAWINGS\C13.DWG

NOTE: ALL DIMENSIONS AND COORDINATES ARE TO BACK OF CURB UNLESS OTHERWISE NOTED.

SCALE : 1" = 40' HORZ.
1" = 4' VERT.

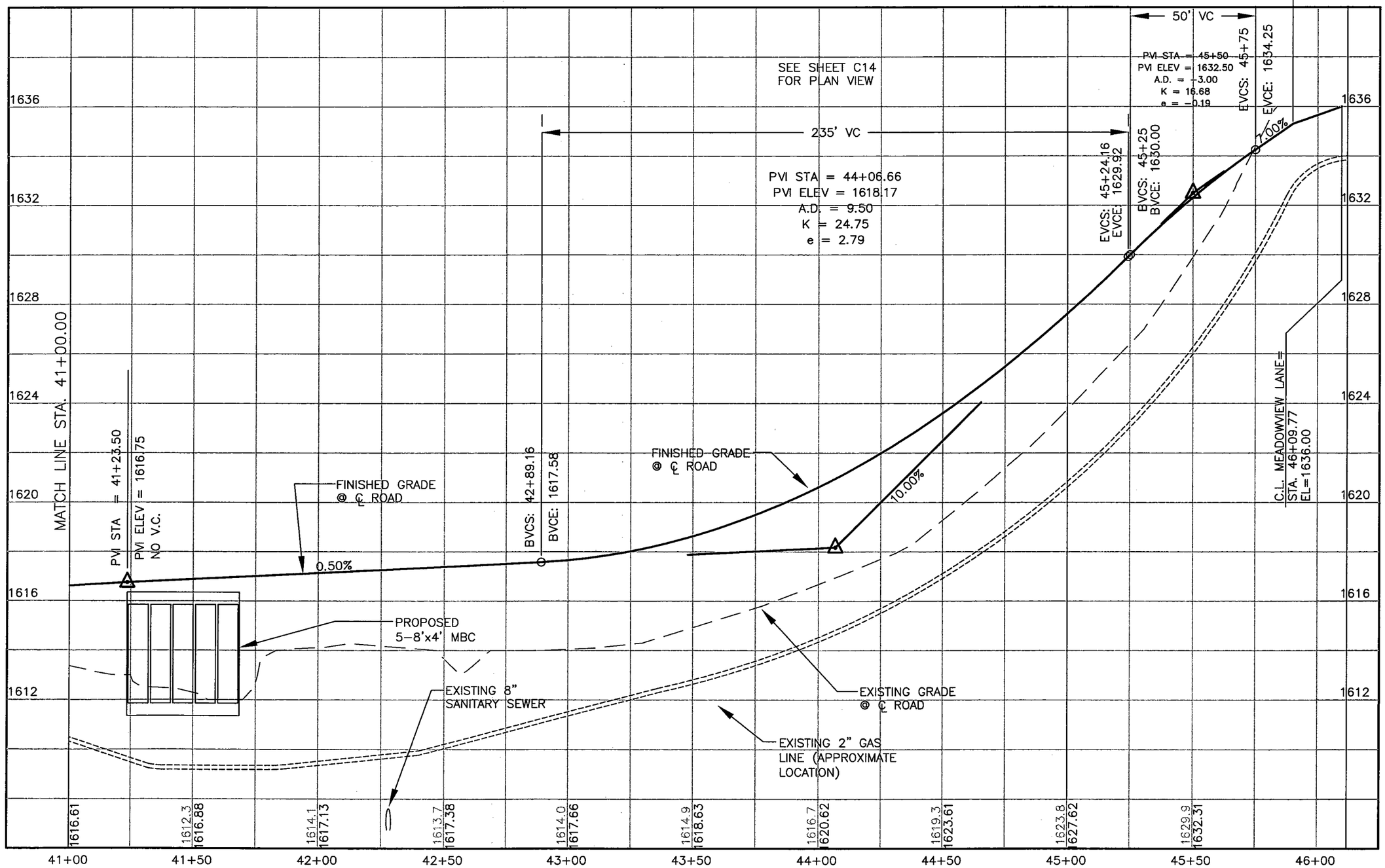

Lockwood, Andrews & Newnam, Inc.

STATE OF TEXAS
DAWN ANN GREEN
79721
LICENSED
PROFESSIONAL ENGINEER

Dawn Green 9-30-04

City of Kerrville
Main Street
Extension
Project

MAIN STREET PROFILE
STA. 41+00 TO
STA. 46+00

No.	Date	Revisions	App.

Scale 1" = 40' Date: Aug. 2004
Designed by T.C.
Drawn by M.K.
Checked by P.J.
Approved by D.G.
Project No. 2178-20-001

C15

L:\119731\120-02178-005\PROD\5_0_DESIGN-REFERENCE\5_13_DRAWINGS\C14.DWG

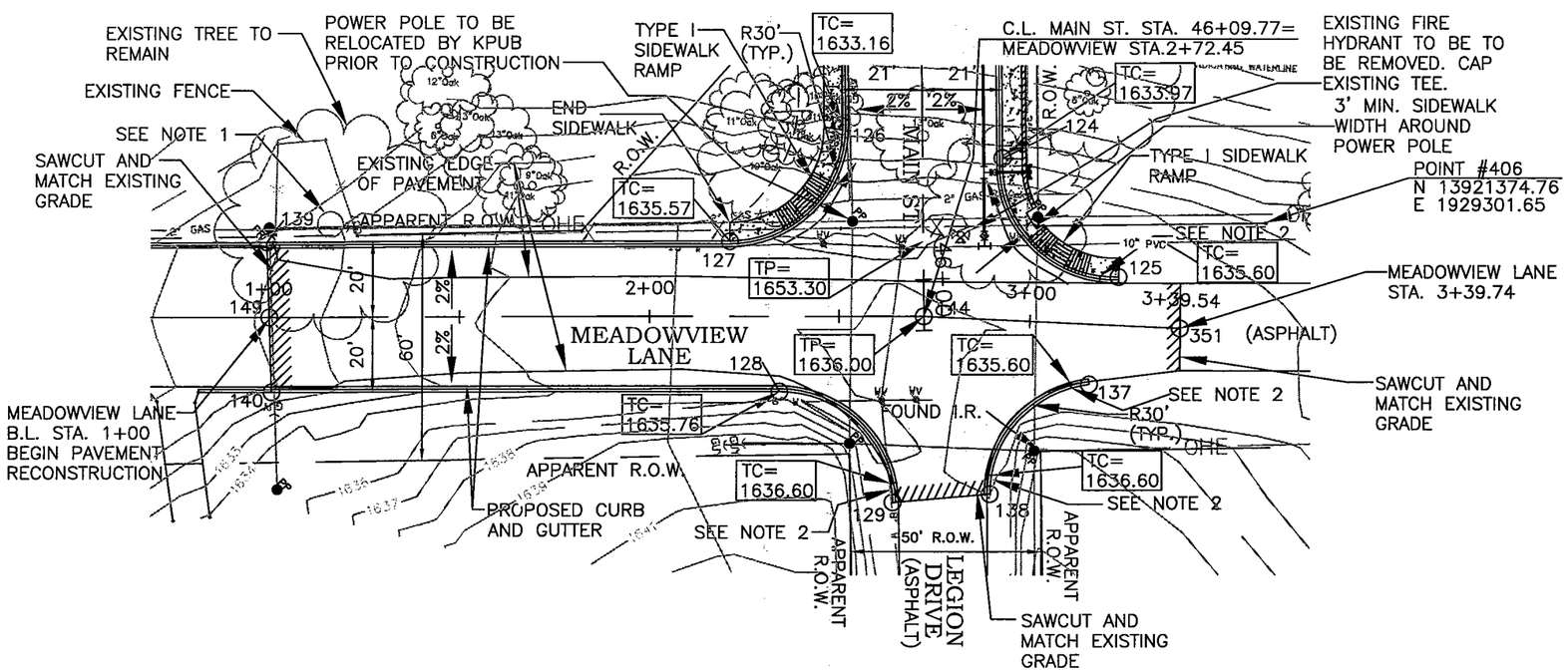

SCALE : 1" = 40' HORZ.
1" = 4' VERT.

POINT TABLE		
PNT	NORTHING	EASTING
124	N13921078.24	E1930082.41
125	N13921078.78	E1930124.14
126	N13921055.59	E1930045.48
127	N13921013.17	E1930046.01
128	N13920994.21	E1930083.56
129	N13920994.69	E1930125.62
137	N13921055.08	E1930144.08
138	N13921012.66	E1930144.84
139	N13920927.18	E1929960.53
140	N13920898.98	E1929988.90
144	N13921035.38	E1930096.29
149	N13920913.08	E1929974.72
351	N13921082.97	E1930143.59

NOTES:
1. MINOR ALIGNMENT IN CURB AS REQUIRED TO AVOID DAMAGING TREE, WILL BE ALLOWED UPON APPROVAL OF CITY ENGINEER.

2. TRANSITION CURB HEIGHT FROM 6" TO 1" IN 5'.

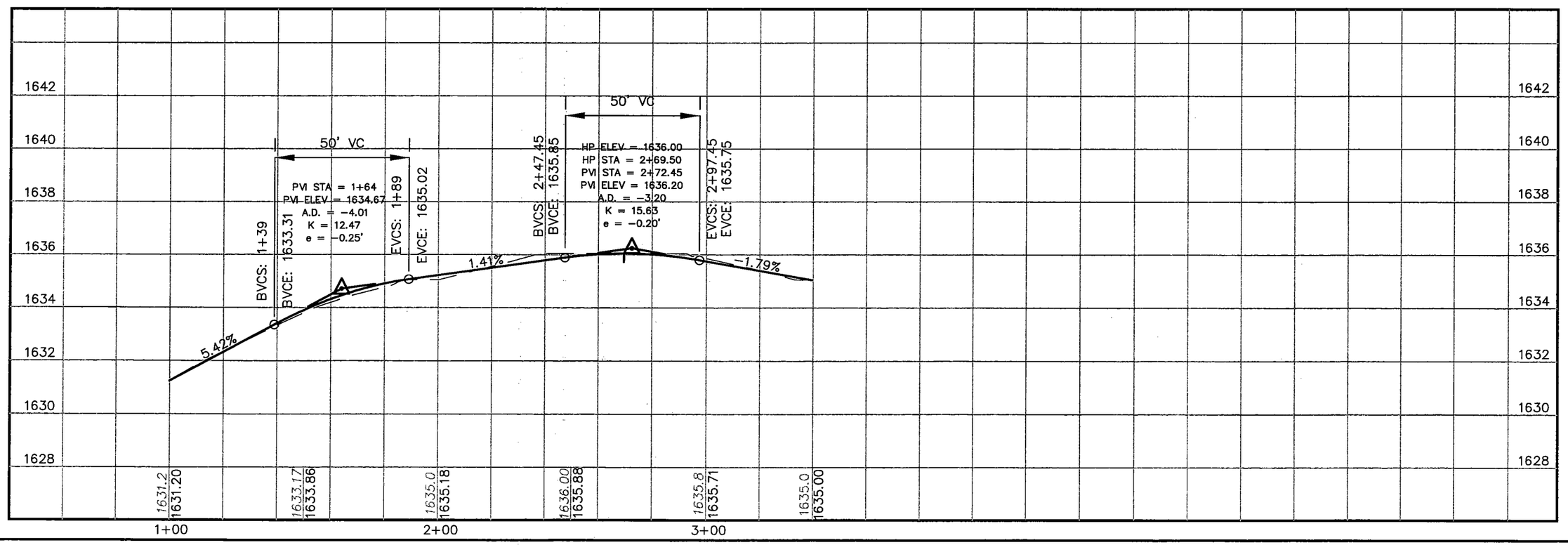

Lockwood, Andrews & Newnam, Inc.

STATE OF TEXAS
DAWN ANN GREEN
79721
LICENSED
PROFESSIONAL ENGINEER

City of Kerrville
Main Street
Extension
Project

MEADOWVIEW LANE
PLAN SHEET
STA. 1+00 TO END

No.	Date	Revisions	App.

Scale 1" = 40' Date Aug. 2004
Designed by T.C.
Drawn by M.K.
Checked by P.J.
Approved by D.G.
Project No. 2178-20-001

C16

L:\19731\120-02178-005\PROD\5_0_DESIGN-REFERENCE\5_13_DRAWINGS\REF\MEADOWVIEW-PP.DWG

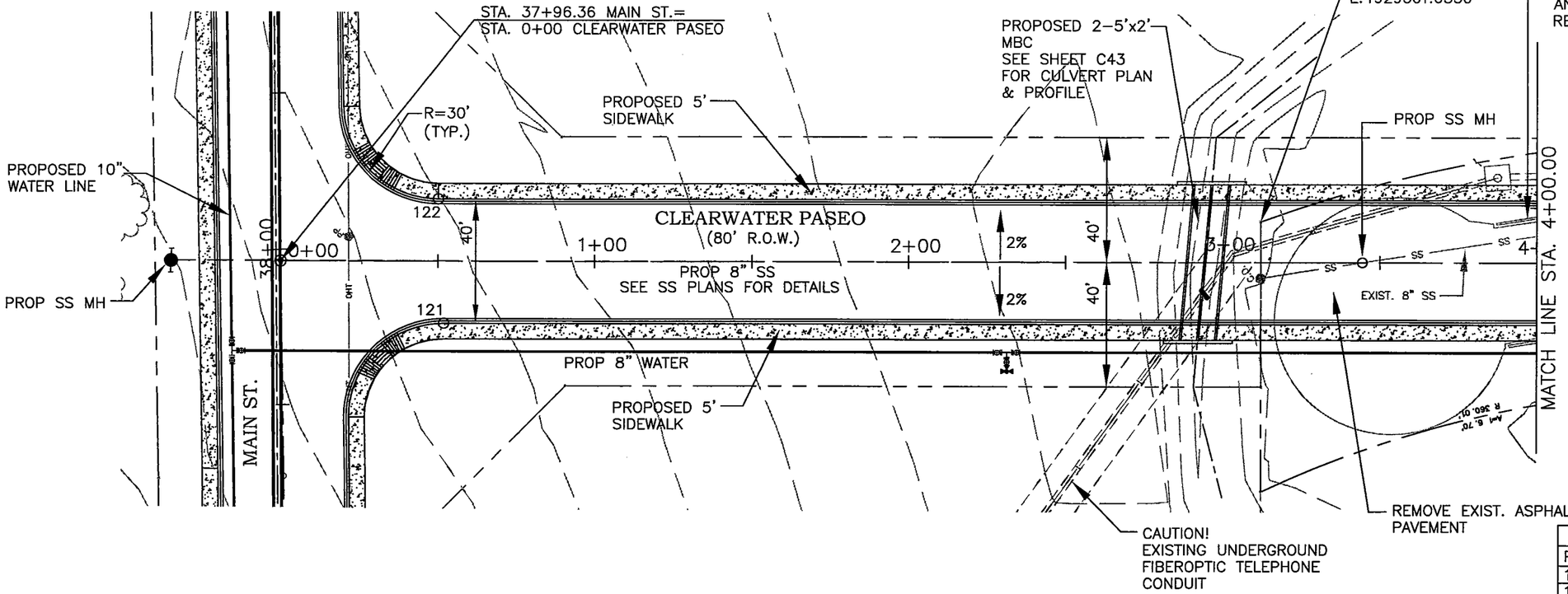

SCALE : 1" = 40' HORZ.
1" = 4' VERT.

NOTE:
1) ALL DIMENSIONS AND COORDINATES ARE TO BACK OF CURB UNLESS OTHERWISE NOTED.
2) SEE WATER PLANS FOR DETAILS OF WATER LINE.

POINT TABLE		
PNT	NORTHING	EASTING
121	13921581.11	1929463.13
122	13921553.90	1929492.51
148	13921603.40	1929514.06

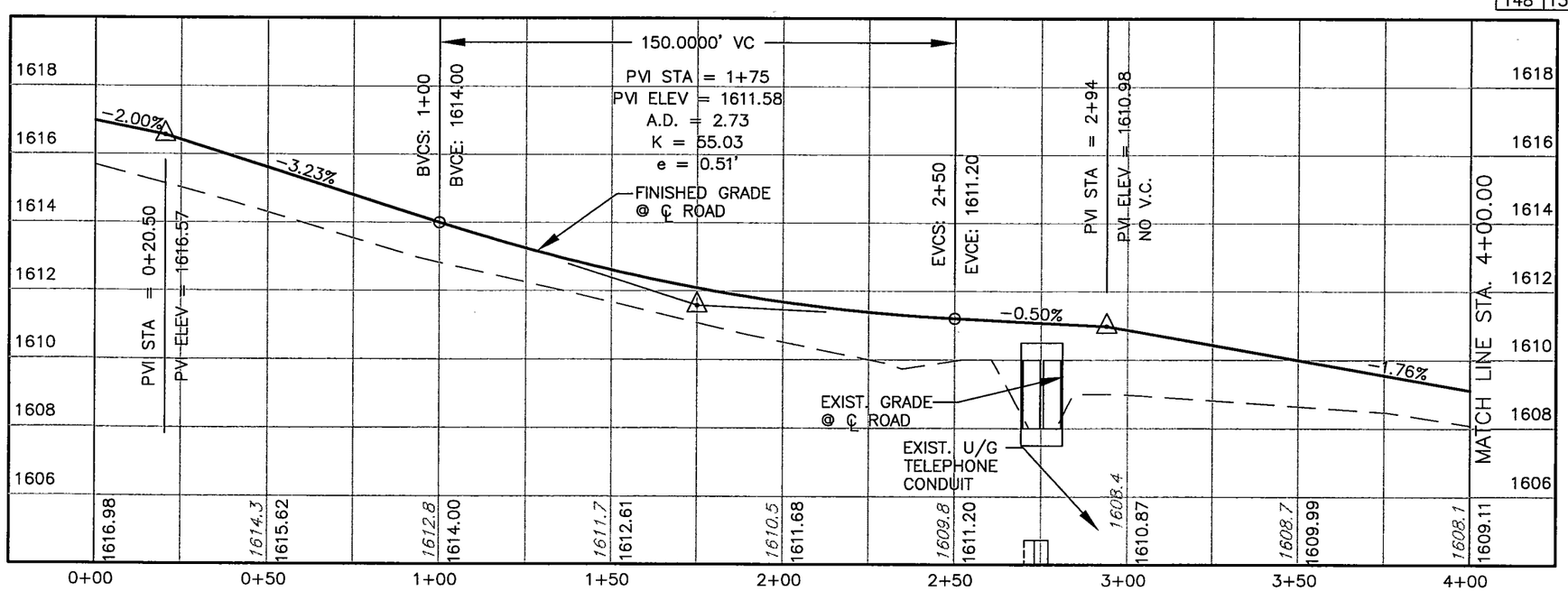

Lockwood, Andrews & Newnam, Inc.

STATE OF TEXAS
JWN ANN GREEN
79721
LICENSED PROFESSIONAL ENGINEER

City of Kerrville
Main Street
Extension
Project

CLEARWATER PASEO
PLAN & PROFILE SHEET
STA. 0+00 TO
STA. 4+00

No.	Date	Revisions	App.

Scale: 1" = 40' Date: Aug. 2004
Designed by: T.C.
Drawn by: M.K.
Checked by: P.J.
Approved by: D.G.
Project No. 2178-20-001

C17

L:\119731\120-02178-005\PROD\5_0_DESIGN-REFERENCE\5_13_DRAWINGS\FINAL PLANS\C16.DWG

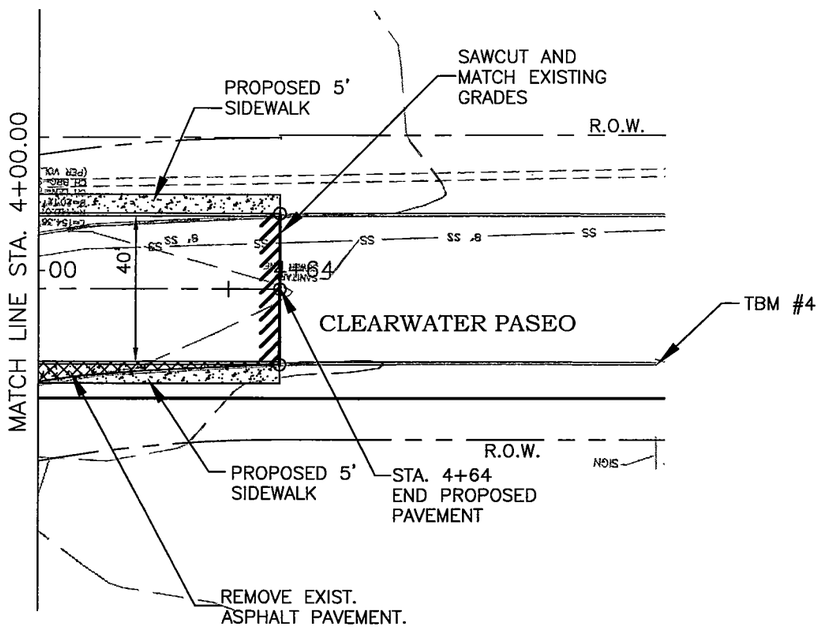

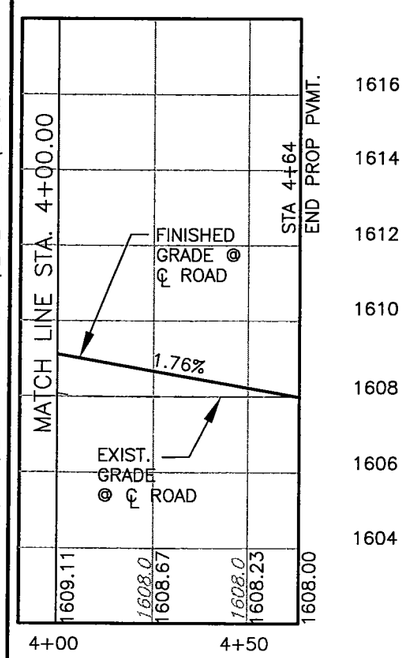

SCALE : 1" = 40' HORZ.
1" = 4' VERT.

POINT TABLE		
PNT	NORTHING	EASTING
152	13921263.04	1929198.77
153	13921291.50	1929170.62
154	13921277.25	1929184.70

NOTE:
1) ALL DIMENSIONS AND COORDINATES ARE TO BACK OF CURB UNLESS OTHERWISE NOTED.
2) SEE WATER PLANS FOR DETAILS OF WATER LINE.

Lockwood, Andrews & Newnam, Inc.

STATE OF TEXAS
DAN ANN GREEN
76721
LICENSED
PROFESSIONAL ENGINEER

City of Kerrville
Main Street
Extension
Project

CLEARWATER PASEO
PLAN & PROFILE SHEET
STA. 4+00 TO
END PROJECT

No.	Date	Revisions	App.

Scale: 1" = 40' Date: Aug. 2004
Designed by: T.C.
Drawn by: M.K.
Checked by: P.J.
Approved by: D.G.
Project No. 2178-20-001

C18

L:\119731\120-02178-005\PROD\5_0_DESIGN-REFERENCE\5_13_DRAWINGS\C17.DWG

CROSS SECTION LEGEND

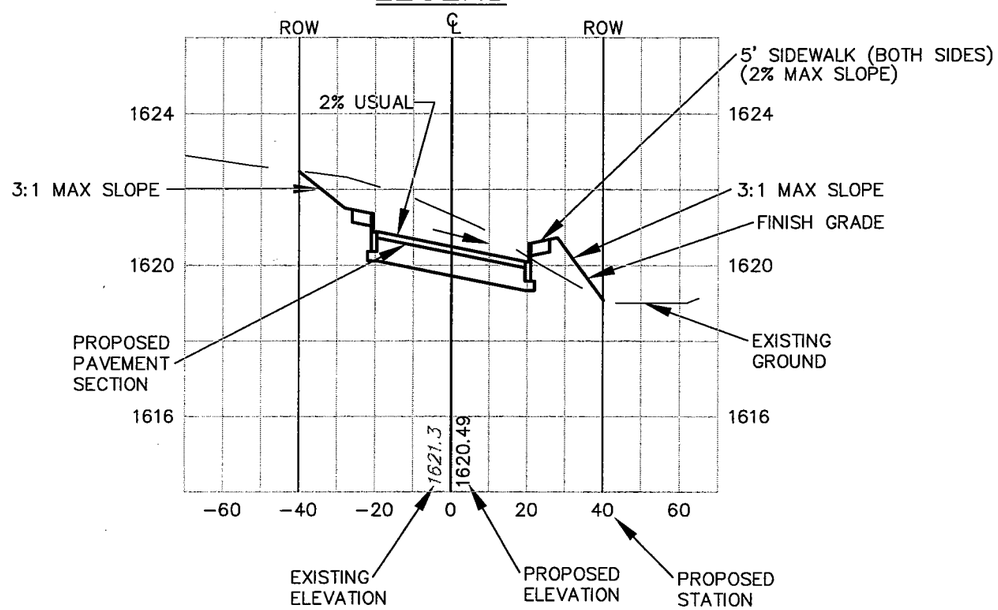

SCALE : 1" = 40' HORZ.
1" = 4' VERT.

Lockwood, Andrews & Newnam, Inc.

STATE OF TEXAS
DAWN ANN GREEN
79721
LICENSED
PROFESSIONAL ENGINEER

City of Kerrville
Main Street
Extension
Project

CROSS SECTIONS LEGEND

No.	Date	Revisions	App.

Scale: 1" = 40' Date: Aug. 2004
Designed by: T.C.
Drawn by: M.K.
Checked by: P.J.
Approved by: D.G.
Project No. 2178-20-001

C19

13+00

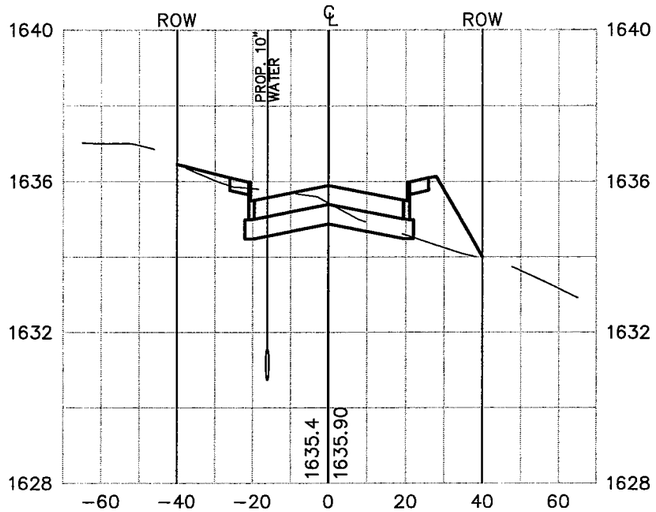

13+50

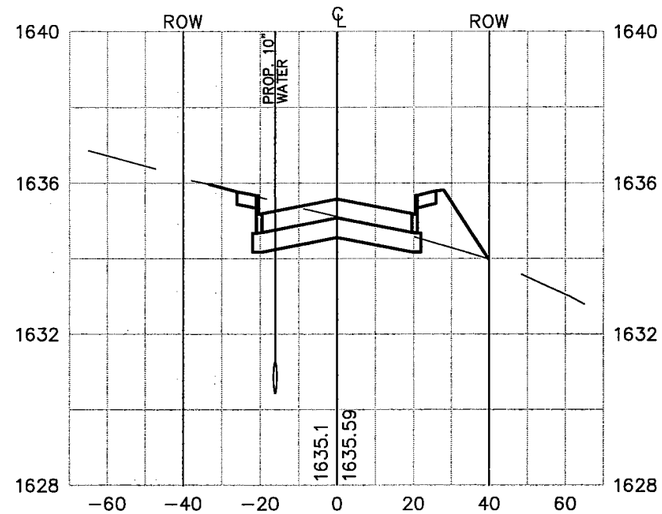

14+00

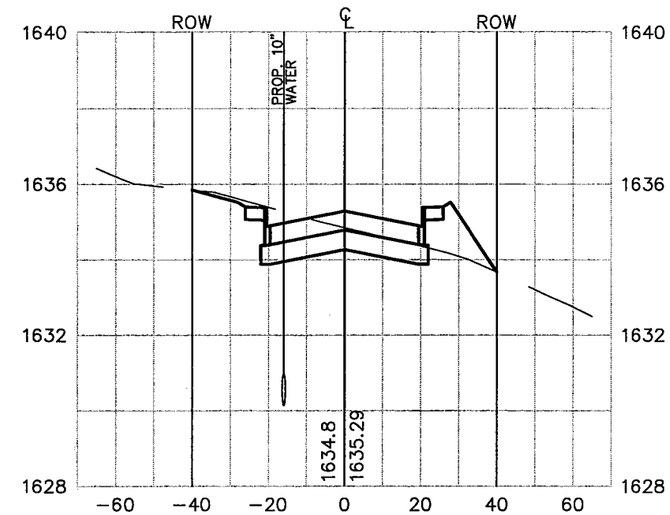

14+50

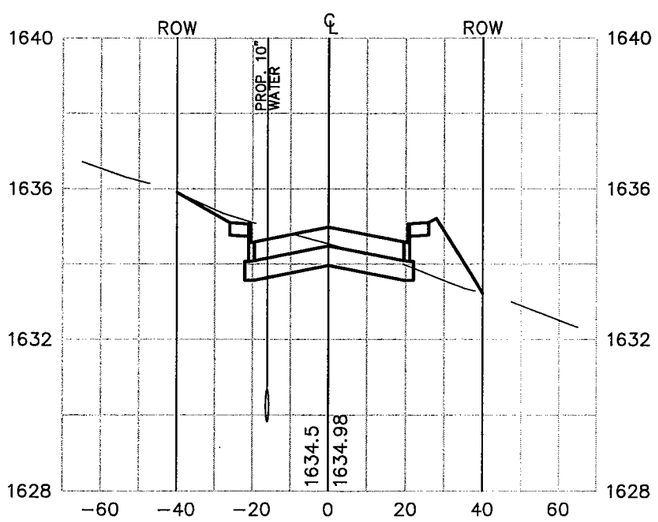

15+00

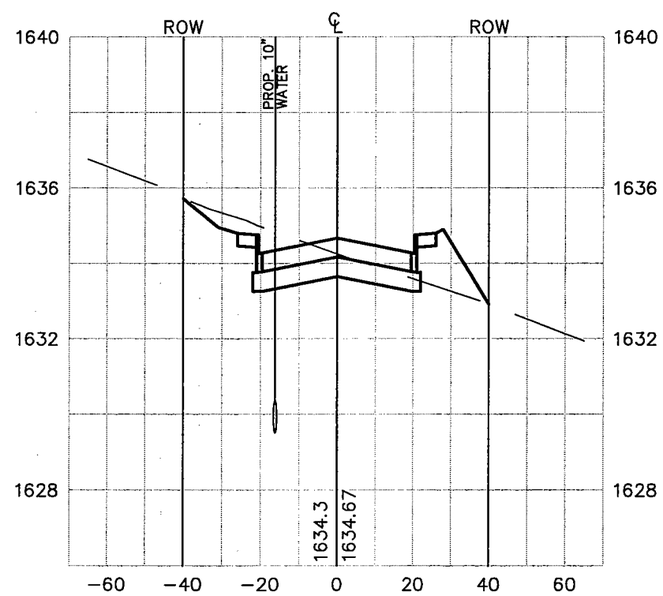

SCALE : 1" = 40' HORZ.
1" = 4' VERT.

Lockwood, Andrews & Newnam, Inc.

STATE OF TEXAS
DAVID ALAN GREEN
79721
LICENSED
PROFESSIONAL ENGINEER

David Green 9-30-04

City of Kerrville
Main Street
Extension
Project

MAIN STREET CROSS SECTIONS
STA. 13+00 TO STA. 15+00

No.	Date	Revisions	App.

Scale: 1" = 40' Date: Aug. 2004
Designed by: T.C.
Drawn by: M.K.
Checked by: P.J.
Approved by: D.G.
Project No. 2178-20-001

C20

15+50

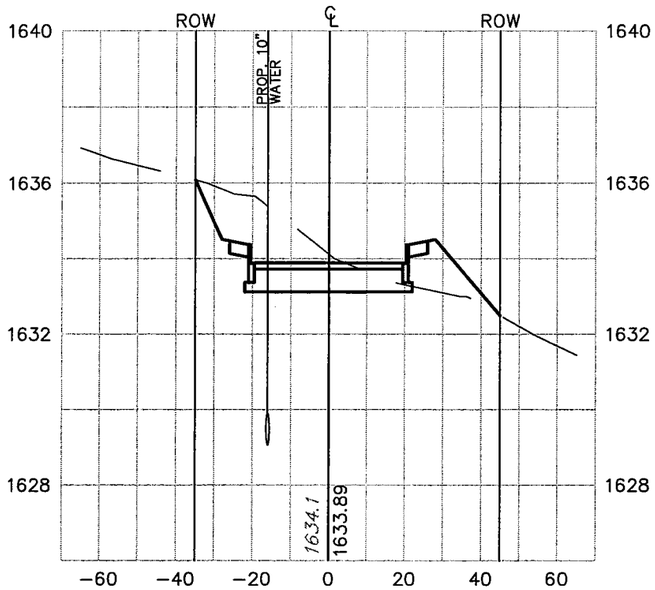

16+00

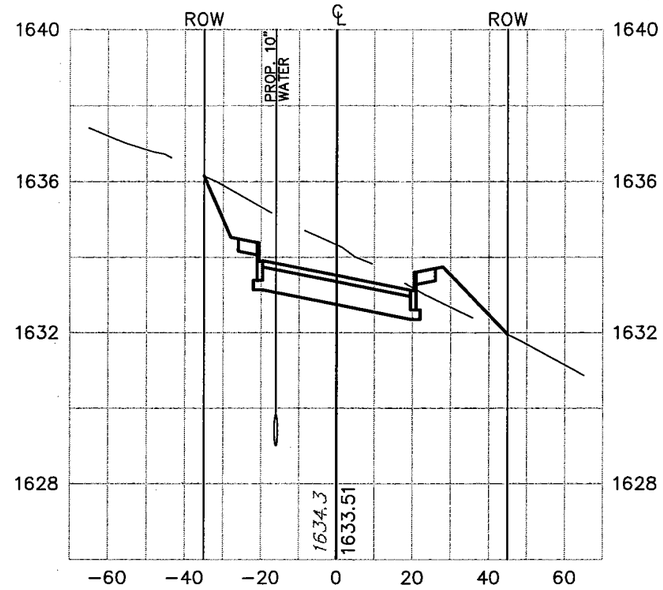

16+50

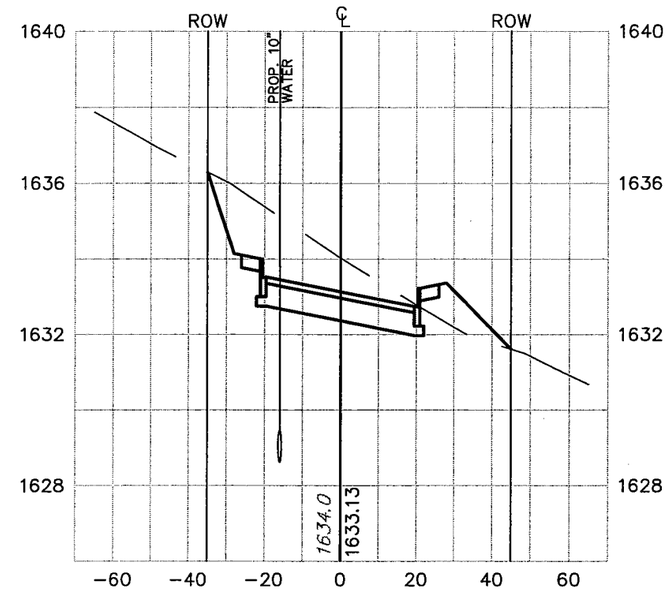

17+00

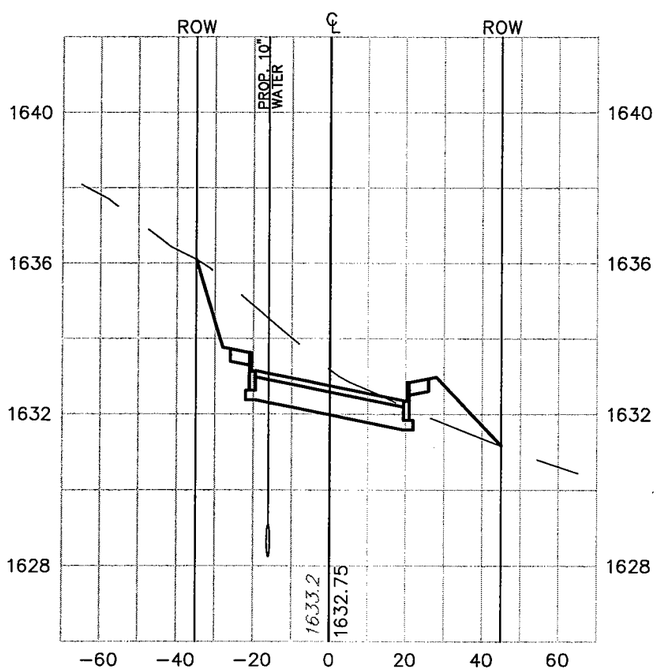

17+50

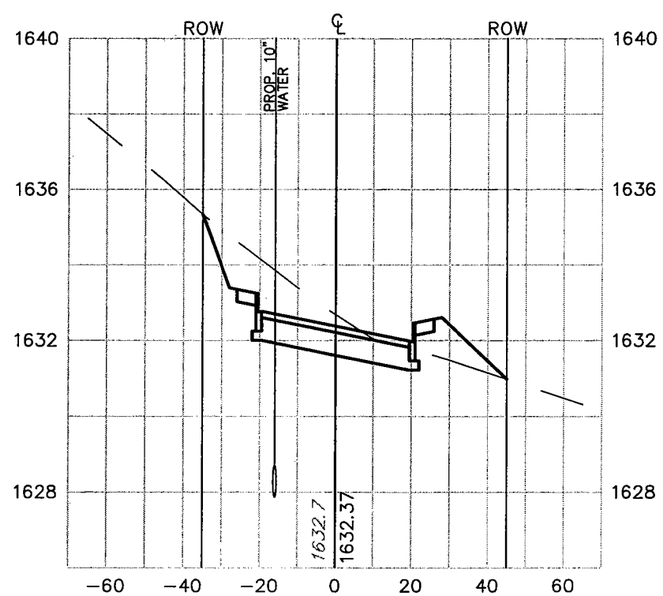

18+00

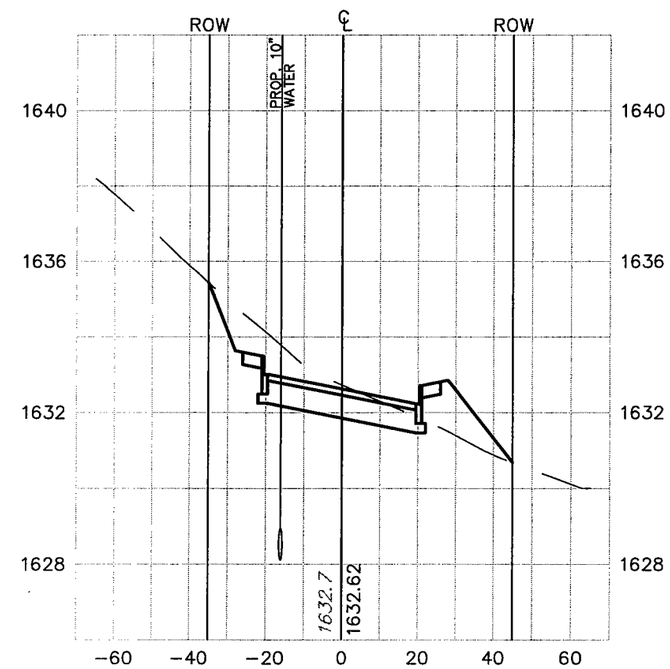

SCALE : 1" = 40' HORZ.
1" = 4' VERT.

Lockwood, Andrews & Newnam, Inc.

STATE OF TEXAS
DAWN ANN GREEN
79721
LICENSED
PROFESSIONAL ENGINEER

Dawn Green 9-30-04

City of Kerrville
Main Street
Extension
Project

MAIN STREET CROSS SECTIONS
STA. 15+50 TO STA. 18+00

No.	Date	Revisions	App.

Scale: 1" = 40' Date: Aug. 2004
Designed by: T.C.
Drawn by: M.K.
Checked by: P.J.
Approved by: D.G.
Project No. 2178-20-001

C21

18+50

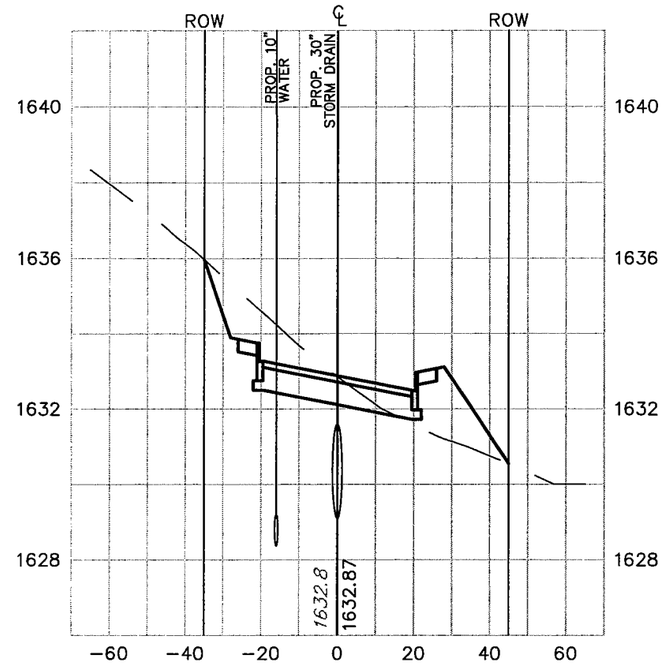

19+00

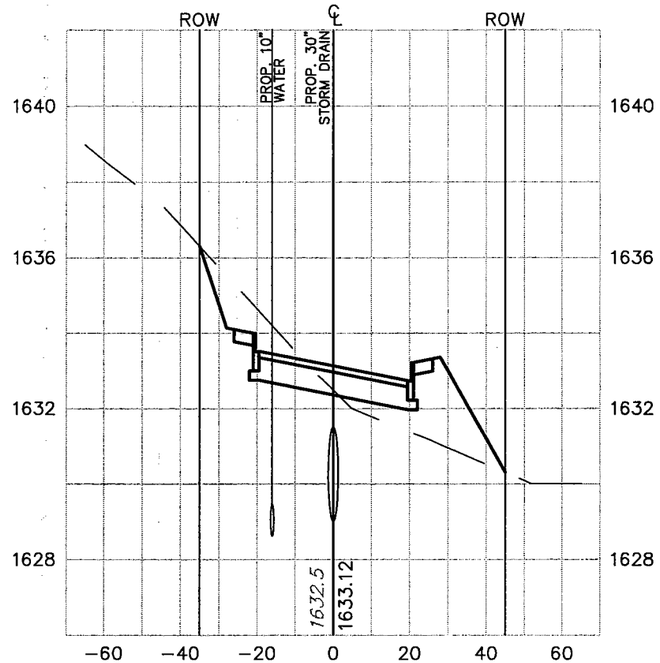

19+50

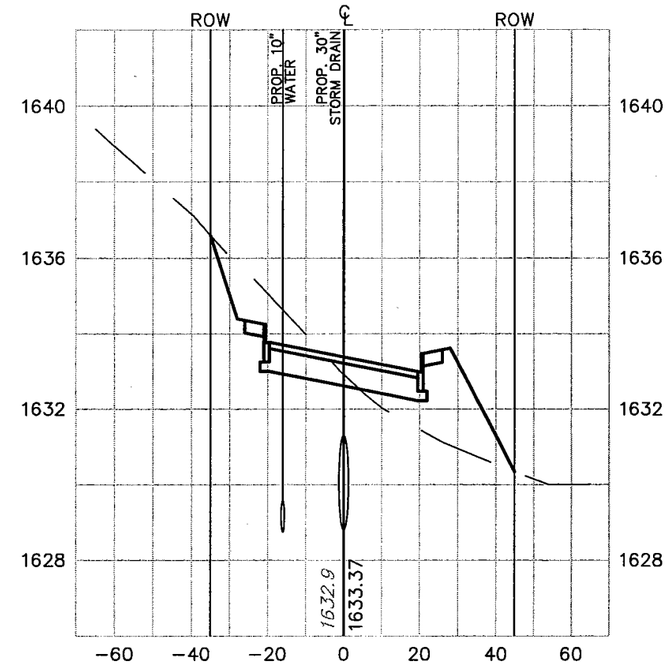

20+00

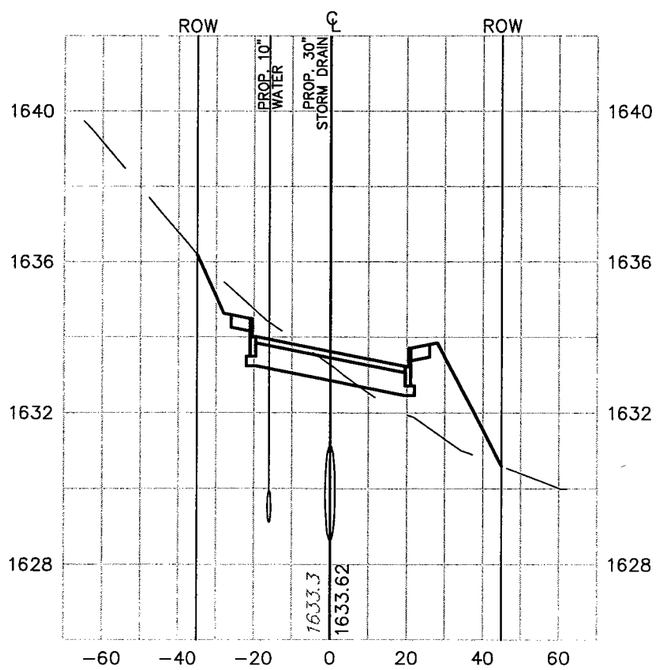

20+50

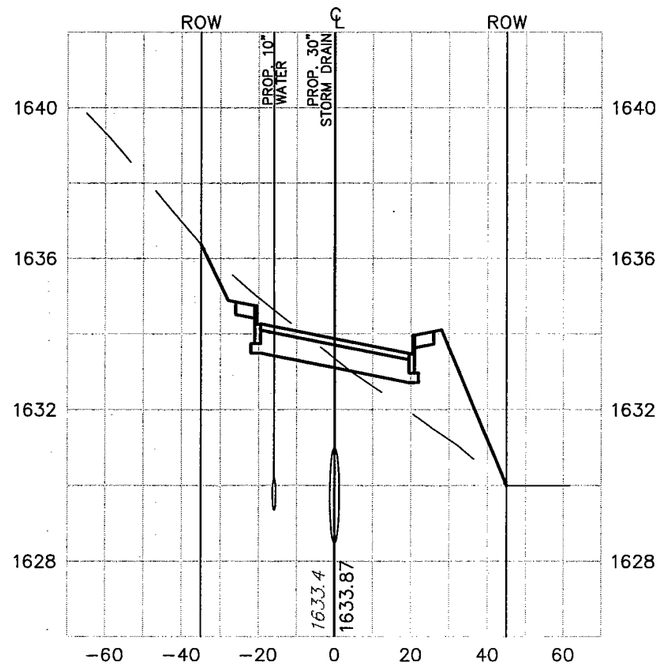

SCALE : 1" = 40' HORZ.
1" = 4' VERT.

LGN Lockwood, Andrews & Newnam, Inc.

STATE OF TEXAS
DAWN ANN GREEN
79721
LICENSED
PROFESSIONAL ENGINEER

Dawn Green 9-30-04

City of Kerrville
Main Street
Extension
Project

MAIN STREET CROSS SECTIONS
STA. 18+50 TO STA. 20+50

No.	Date	Revisions	App.

Scale 1" = 40' Date: Aug. 2004
Designed by: T.C.
Drawn by: M.K.
Checked by: P.J.
Approved by: D.G.
Project No. 2178-20-001

C22

21+00

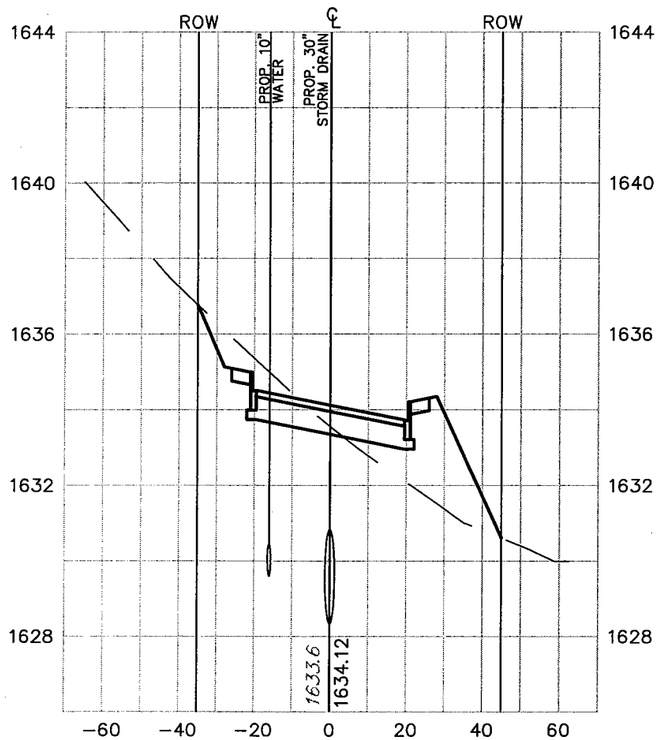

21+50

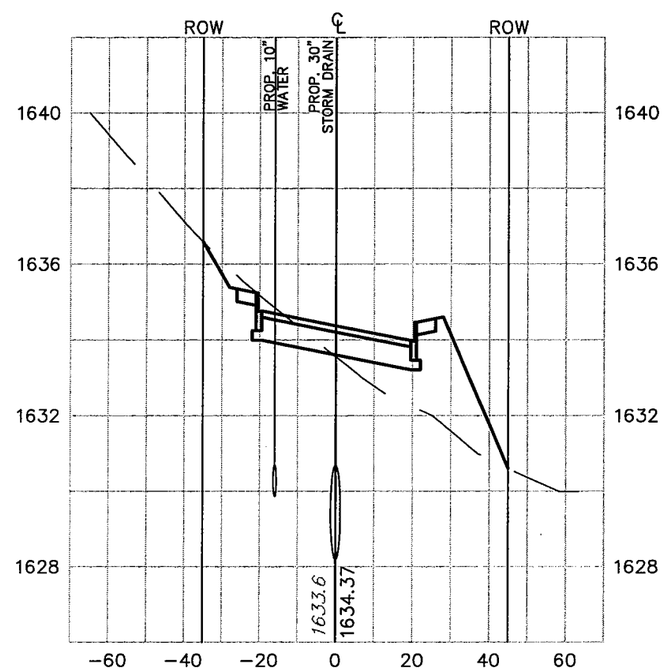

22+00

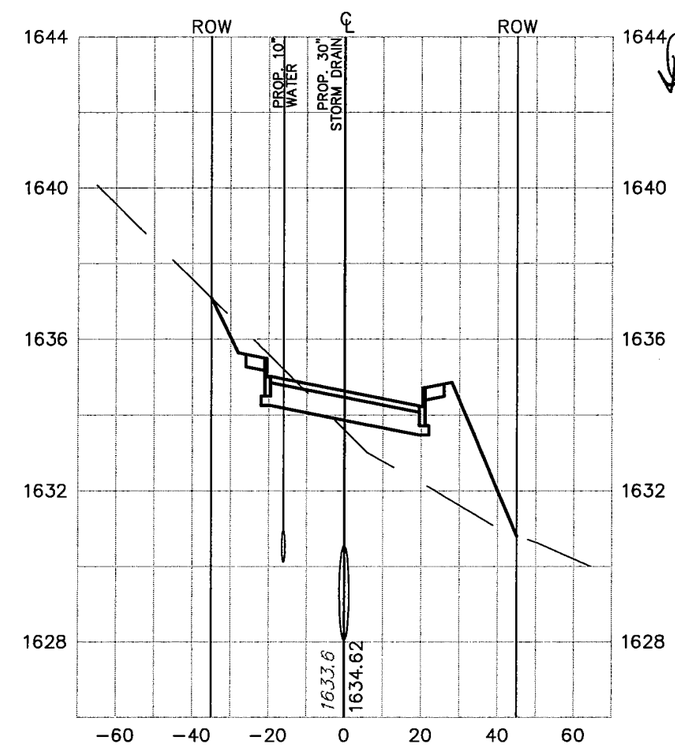

SCALE : 1" = 40' HORZ.
1" = 4' VERT.

Lockwood, Andrews & Newnam, Inc.

STATE OF TEXAS
DAWN ANN GREEN
79721
LICENSED
PROFESSIONAL ENGINEER

City of Kerrville
Main Street Extension Project

MAIN STREET CROSS SECTIONS
STA. 21+00 TO STA. 22+00

No.	Date	Revisions	App.

Scale: 1" = 40' Date: Aug. 2004
Designed by: T.C.
Drawn by: M.K.
Checked by: P.J.
Approved by: D.G.
Project No. 2178-20-001

C23

22+50

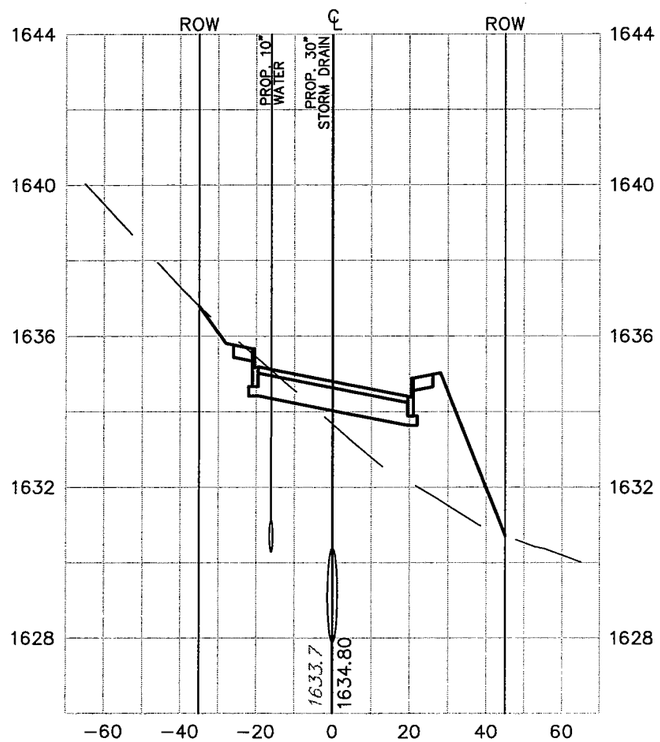

23+00

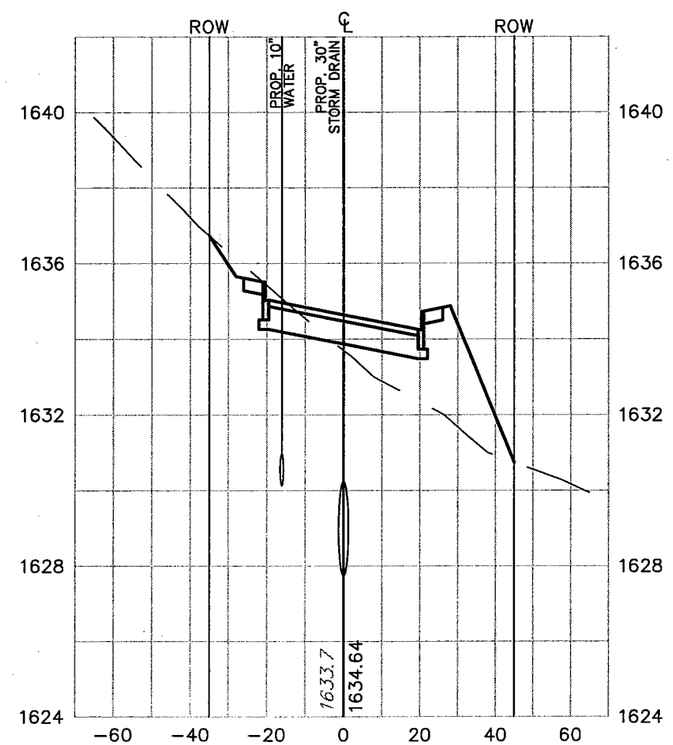

23+50

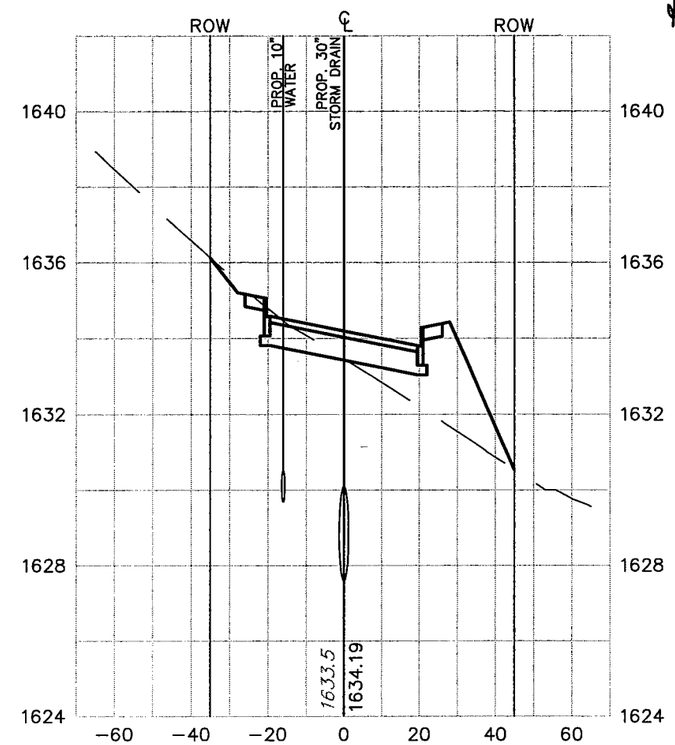

SCALE : 1" = 40' HORZ.
1" = 4' VERT.

Lockwood, Andrews & Newnam, Inc.

STATE OF TEXAS
DAVID A. GREEN
76721
LICENSED
PROFESSIONAL ENGINEER

David A. Green 9-30-04

City of Kerrville
Main Street
Extension
Project

MAIN STREET CROSS SECTIONS
STA. 22+50 TO STA. 23+50

No.	Date	Revisions	App.

Scale 1" = 40' Date: Aug. 2004
Designed by: T.C.
Drawn by: M.K.
Checked by: P.J.
Approved by: D.G.
Project No. 2178-20-001

C24

24+00

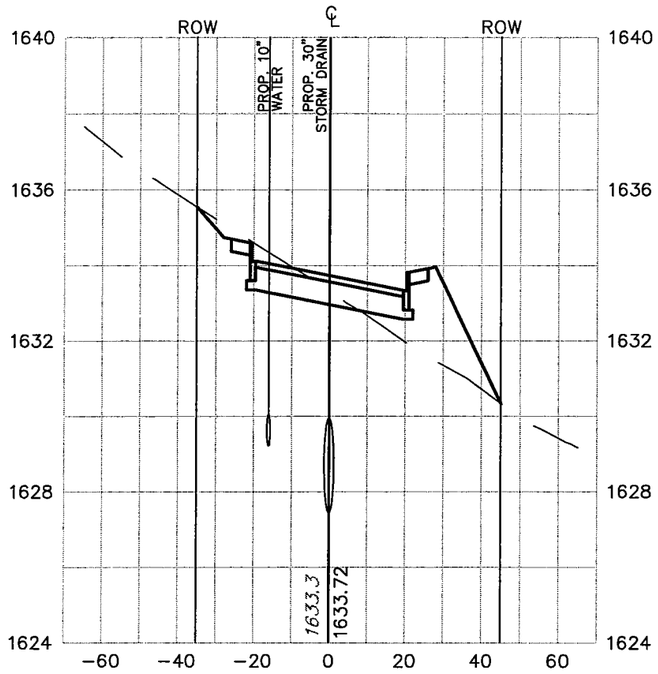

24+50

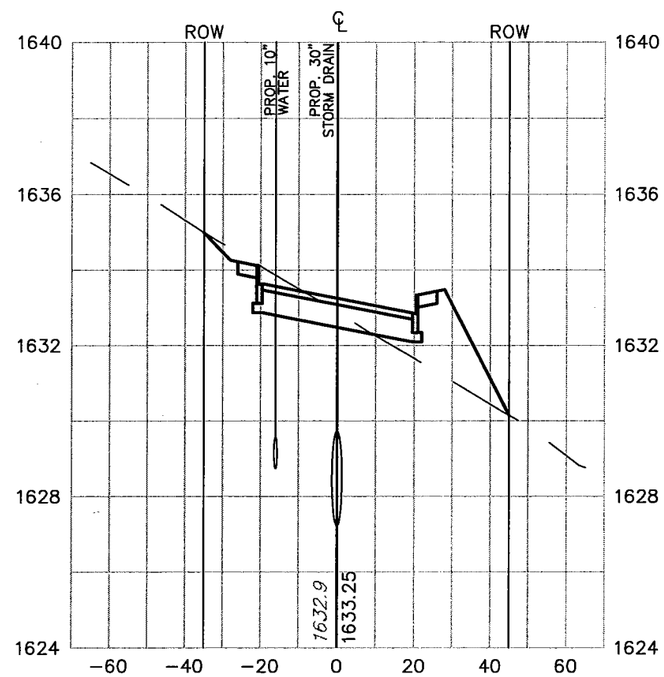

25+00

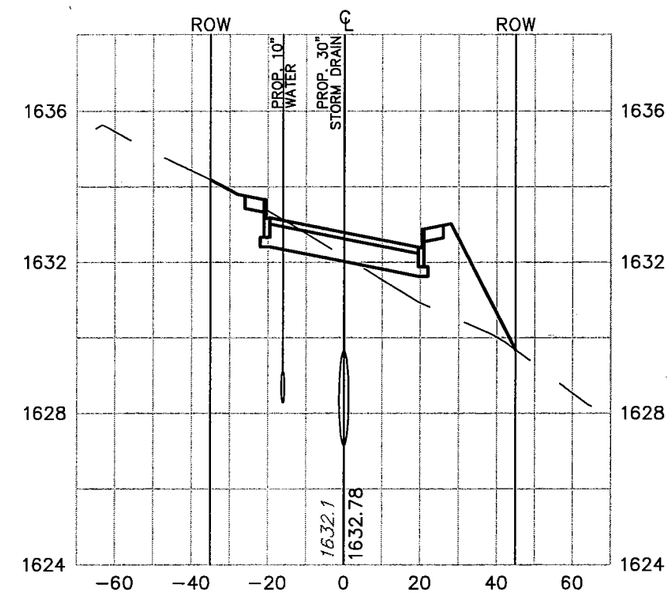

25+50

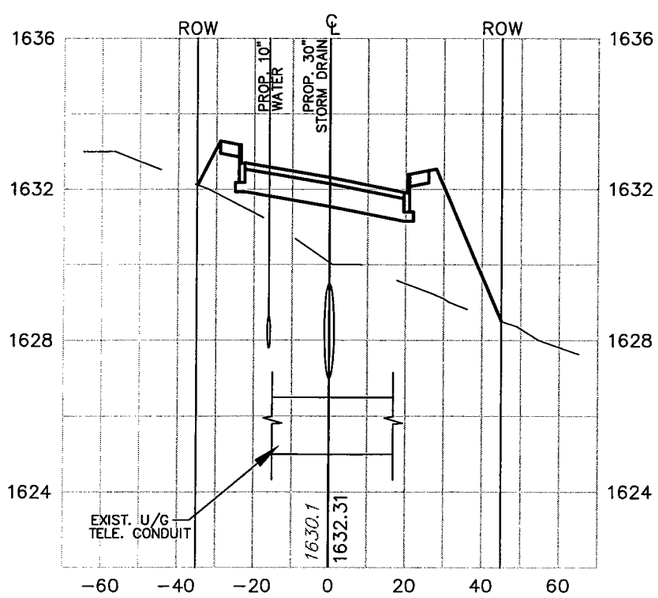

26+00

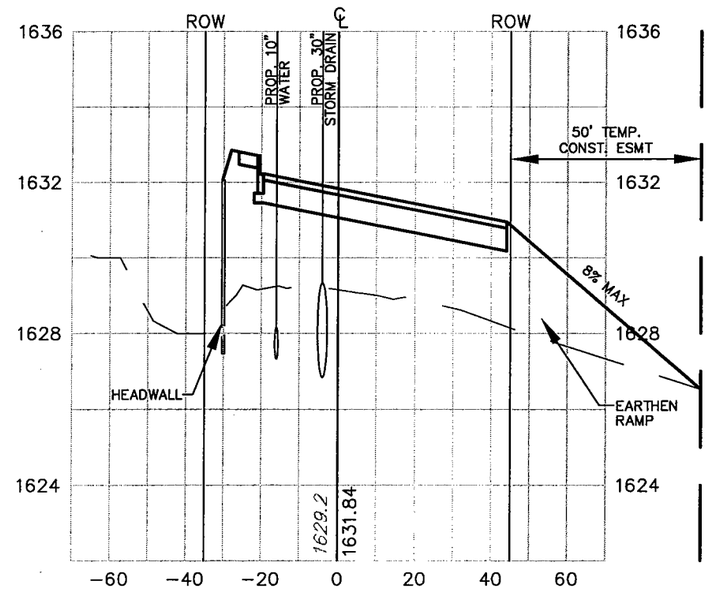

SCALE : 1" = 40' HORZ.
1" = 4' VERT.

Lockwood, Andrews & Newnam, Inc.

STATE OF TEXAS
DAWN ANN GREEN
79721
LICENSED
PROFESSIONAL ENGINEER

Dawn Green 9-30-04

City of Kerrville
Main Street Extension Project

MAIN STREET CROSS SECTIONS
STA. 24+00 TO STA. 26+00

No.	Date	Revisions	App.

Scale: 1" = 40' Date: Aug. 2004
Designed by: T.C.
Drawn by: M.K.
Checked by: P.J.
Approved by: D.G.
Project No. 2178-20-001

C25

26+50

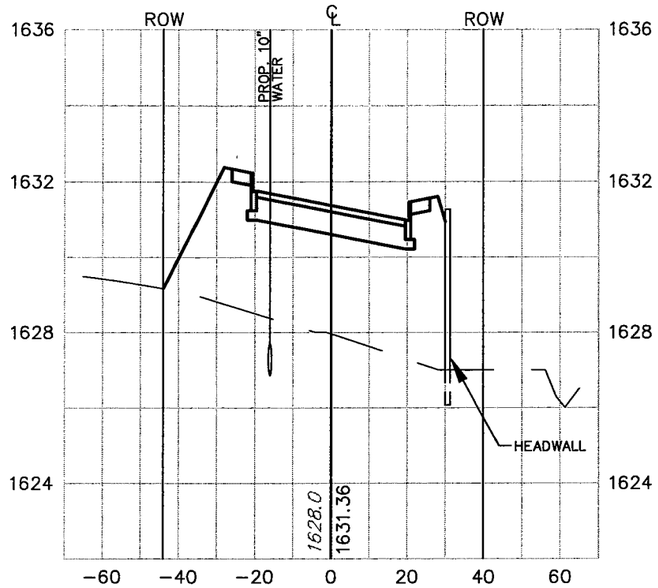

27+00

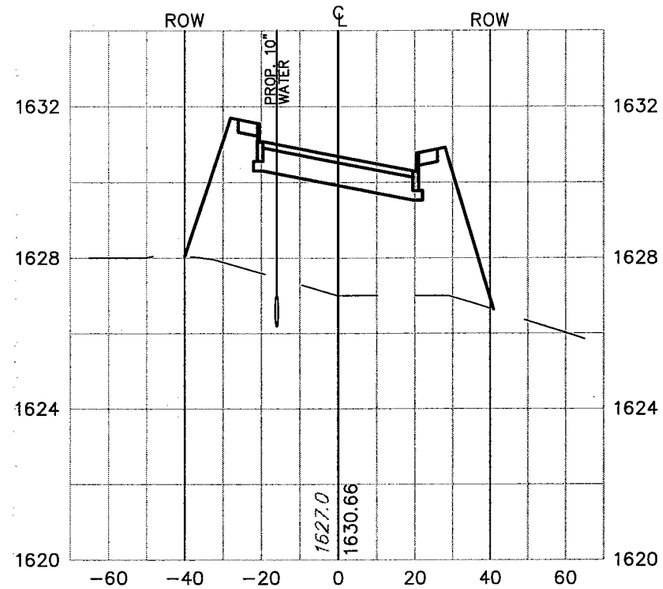

27+50

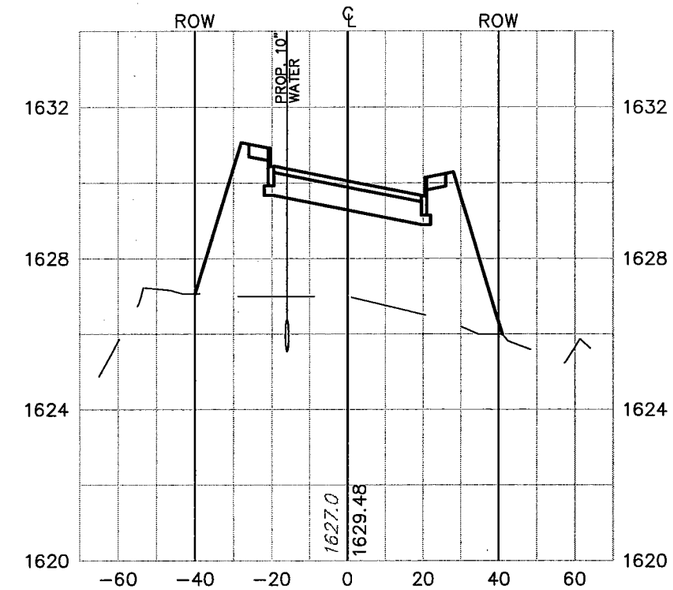

28+00

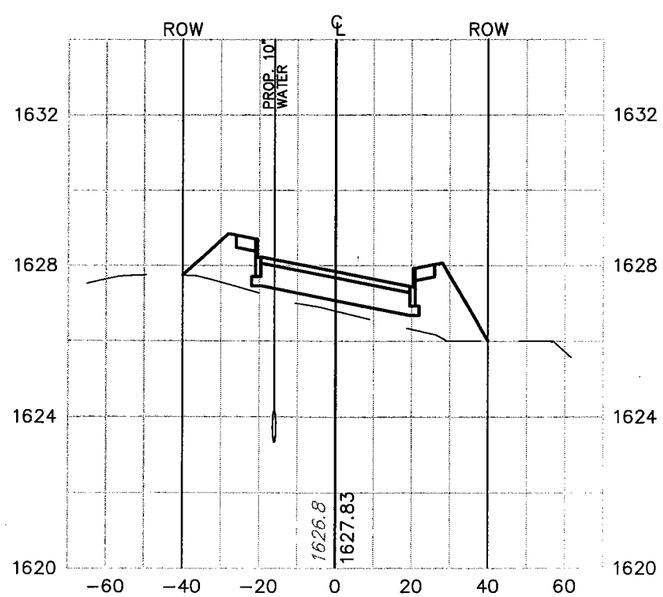

28+50

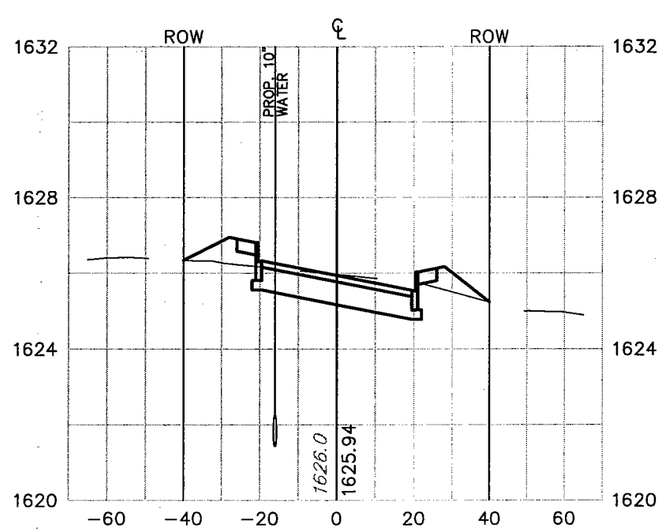

SCALE : 1" = 40' HORZ.
1" = 4' VERT.

Lockwood, Andrews & Newnam, Inc.

STATE OF TEXAS
DAWN ANN GREEN
79721
LICENSED
PROFESSIONAL ENGINEER

Dawn Green 9-30-04

City of Kerrville
Main Street
Extension
Project

MAIN STREET CROSS SECTIONS
STA. 26+50 TO STA. 28+50

No.	Date	Revisions	App.

Scale 1" = 40' Date: Aug. 2004
Designed by: T.C.
Drawn by: M.K.
Checked by: P.J.
Approved by: D.G.
Project No. 2178-20-001

C26

29+00

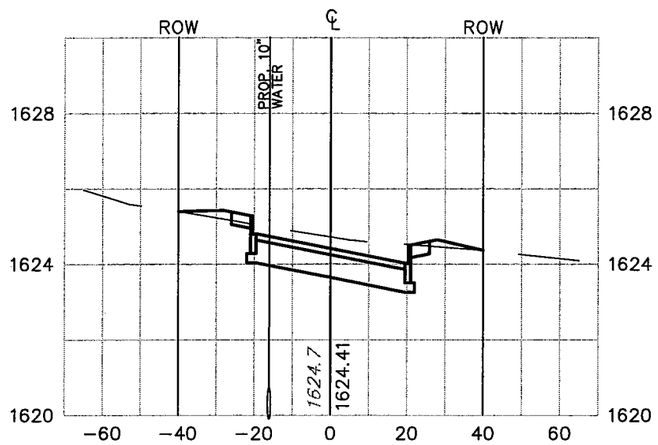

29+50

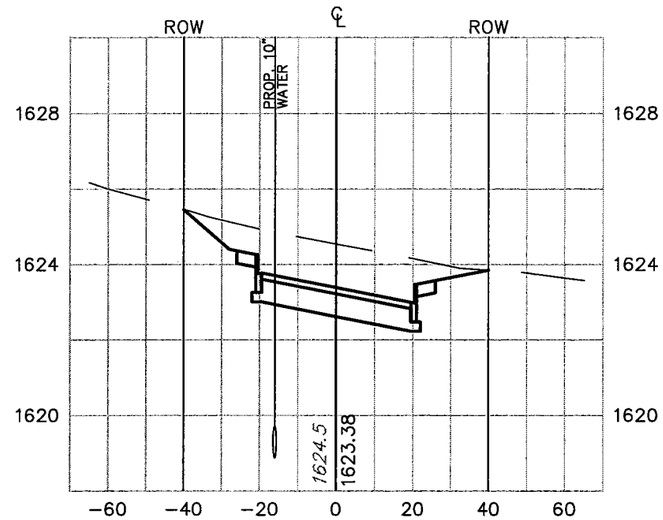

30+00

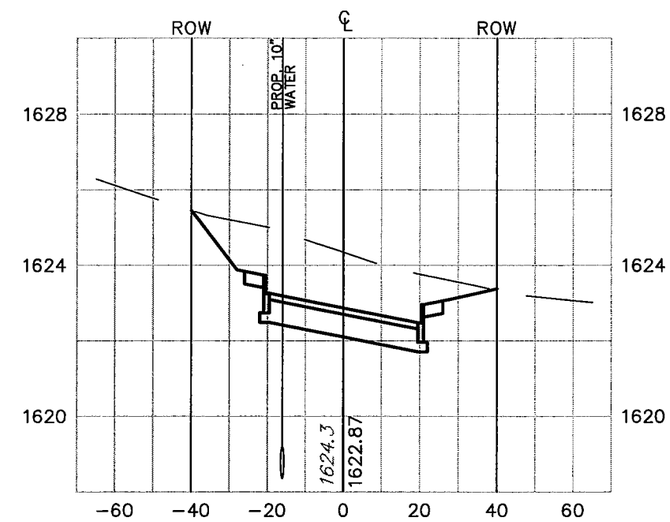

30+50

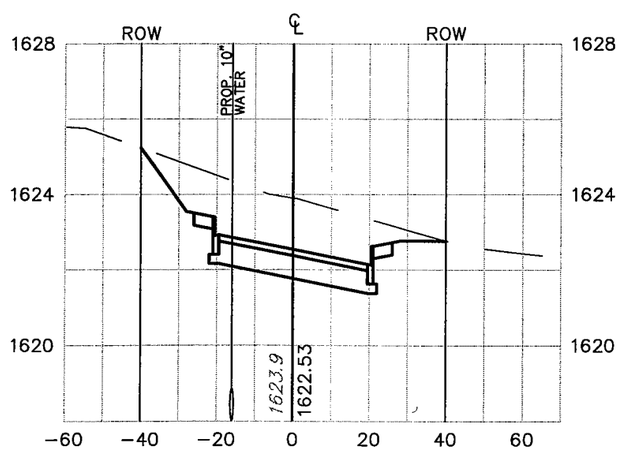

31+00

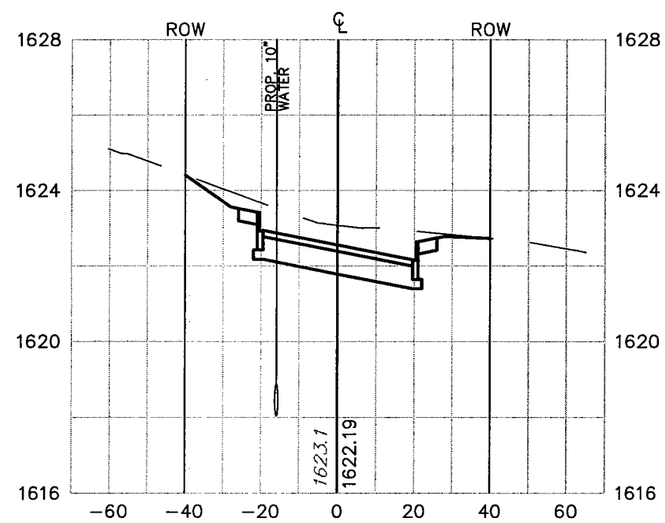

31+50

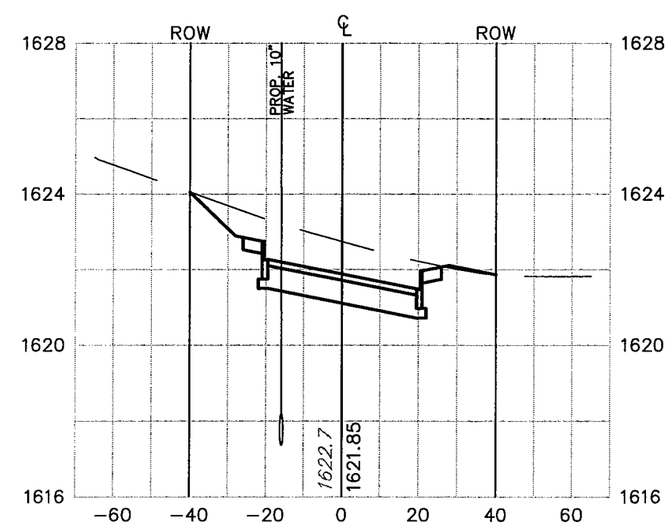

SCALE : 1" = 40' HORZ.
1" = 4' VERT.

Lockwood, Andrews & Newnam, Inc.

STATE OF TEXAS
DAWN ANN GREEN
79721
LICENSED
PROFESSIONAL ENGINEER

City of Kerrville
Main Street
Extension
Project

MAIN STREET CROSS SECTIONS
STA. 29+00 TO STA. 31+50

No.	Date	Revisions	App.

Scale: 1" = 40' Date: Aug. 2004
Designed by: T.C.
Drawn by: M.K.
Checked by: P.J.
Approved by: D.G.
Project No. 2178-20-001

C27

32+00

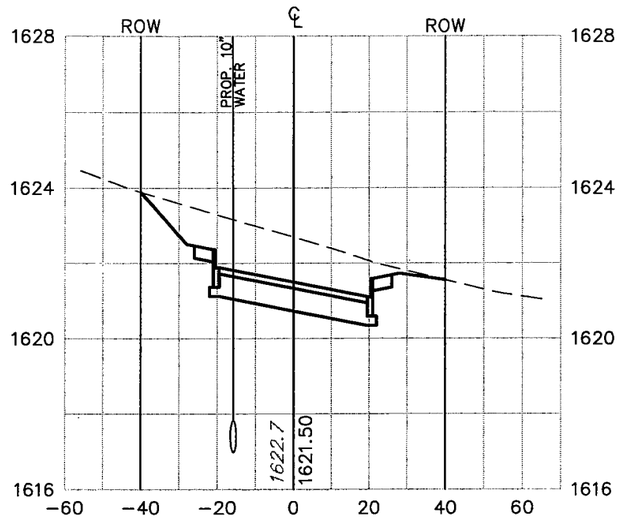

32+10.55

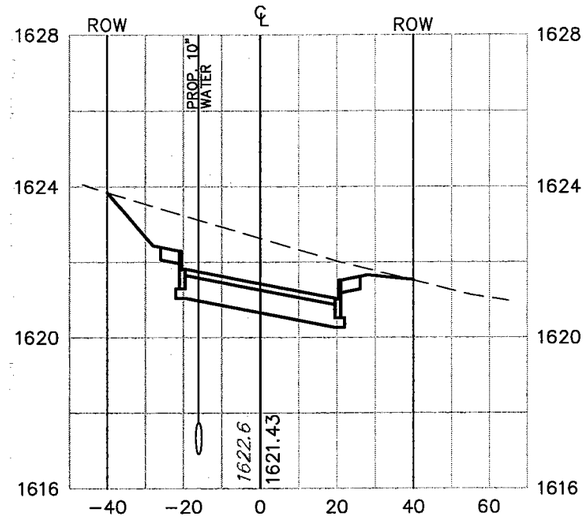

32+50

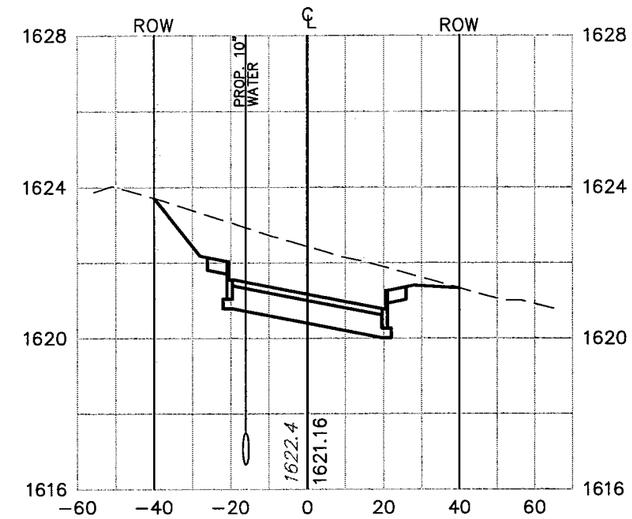

33+00

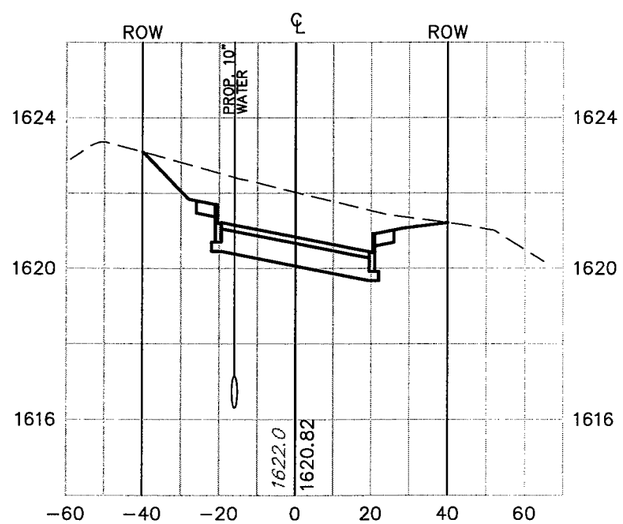

33+50

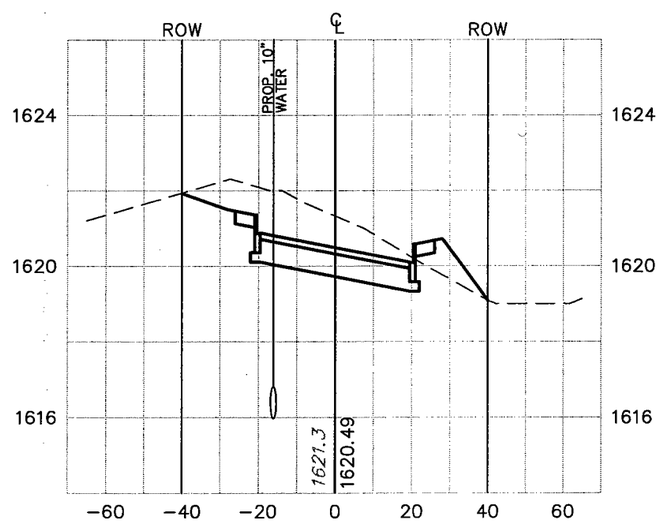

34+00

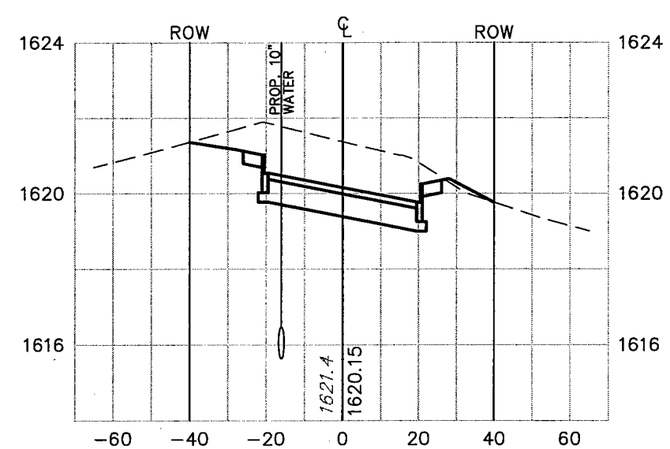

SCALE : 1" = 40' HORZ.
1" = 4' VERT.

Lockwood, Andrews & Newnam, Inc.

STATE OF TEXAS
DAVID ANN GRETZ
79721
LICENSED
PROFESSIONAL ENGINEER

City of Kerrville
Main Street
Extension
Project

MAIN STREET CROSS SECTIONS
STA. 32+00 TO STA. 34+00

No.	Date	Revisions	App.

Scale: 1" = 40' Date: Aug. 2004
Designed by: T.C.
Drawn by: M.K.
Checked by: P.J.
Approved by: D.G.
Project No. 2178-20-001

C28

34+50

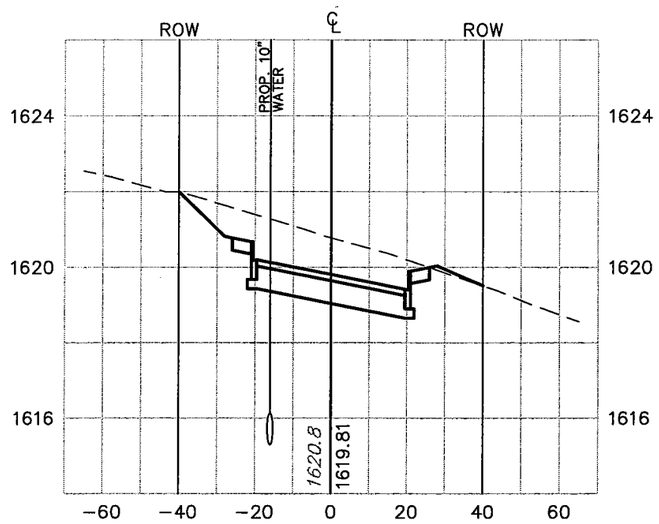

35+00

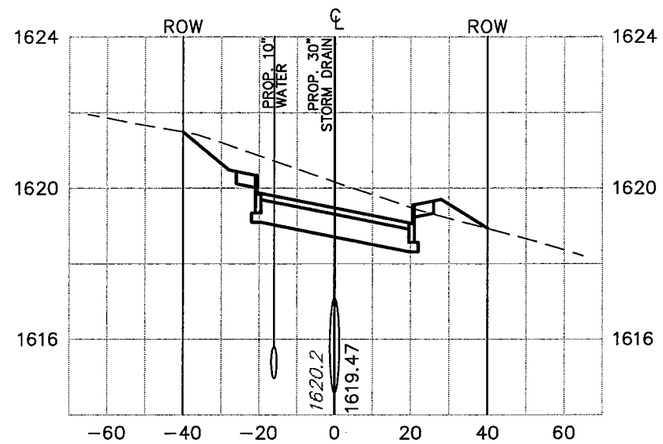

35+50

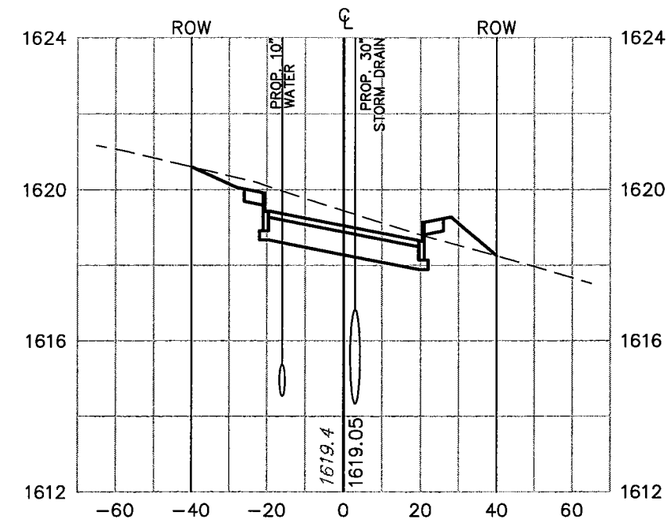

36+00

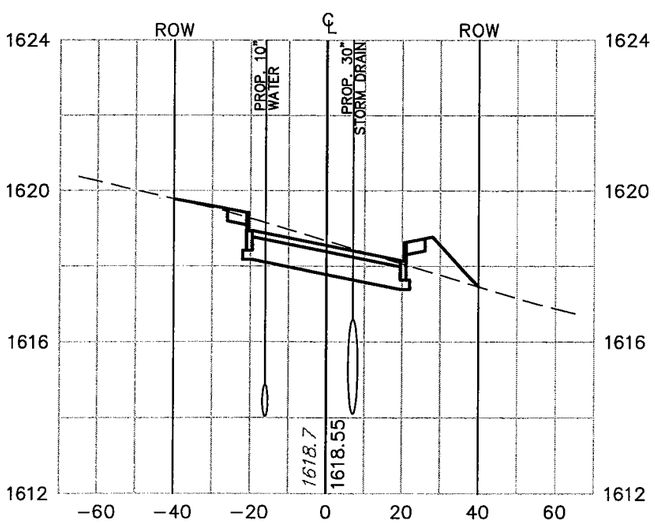

36+50

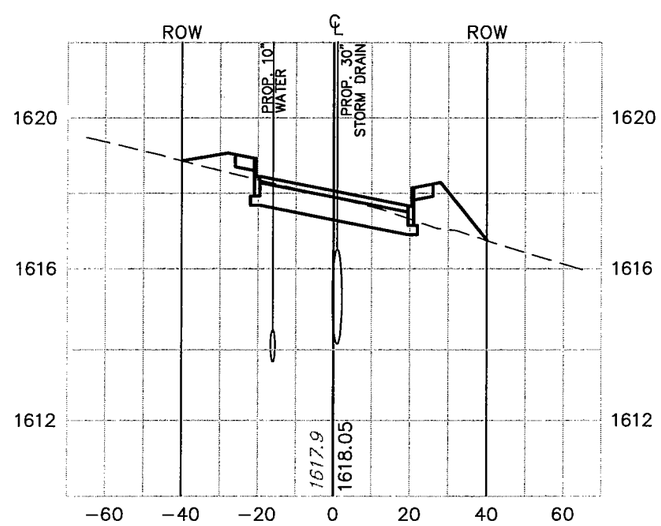

37+00

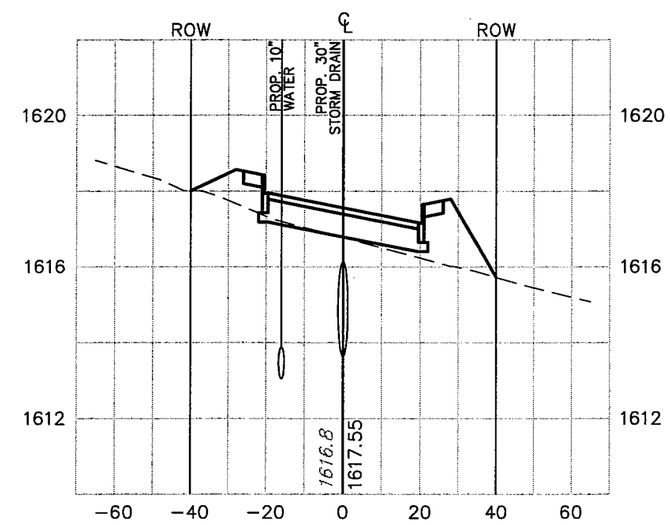

SCALE : 1" = 40' HORZ.
1" = 4' VERT.

Lockwood, Andrews & Newnam, Inc.

STATE OF TEXAS
DAWN ANN GREEN
79721
LICENSED
PROFESSIONAL ENGINEER

City of Kerrville
Main Street
Extension
Project

MAIN STREET CROSS SECTIONS
STA. 34+50 TO STA. 37+00

No.	Date	Revisions	App.

Scale: 1" = 40' Date: Aug. 2004
Designed by: T.C.
Drawn by: M.K.
Checked by: P.J.
Approved by: D.G.
Project No. 2178-20-001

C29

37+50

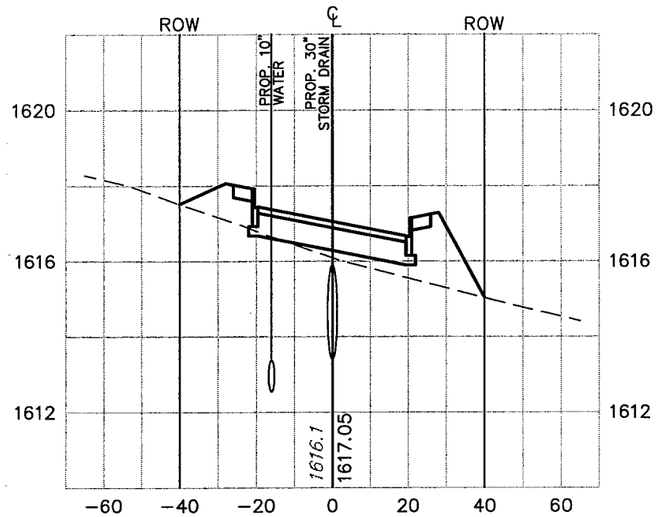

38+00

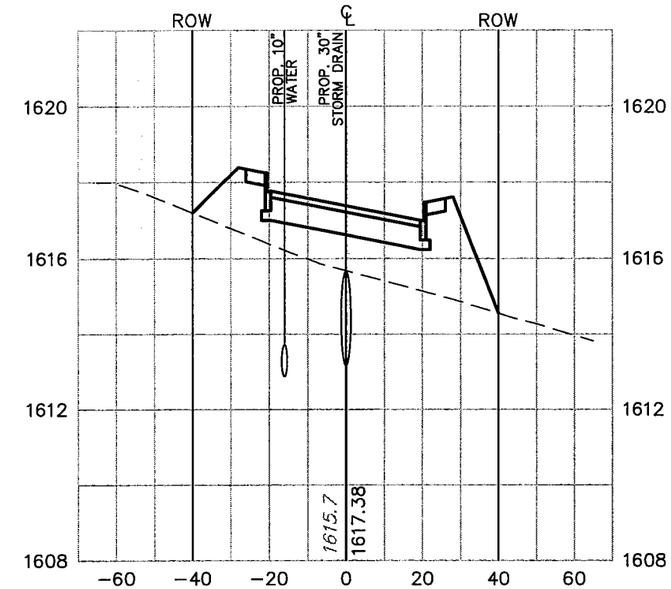

38+50

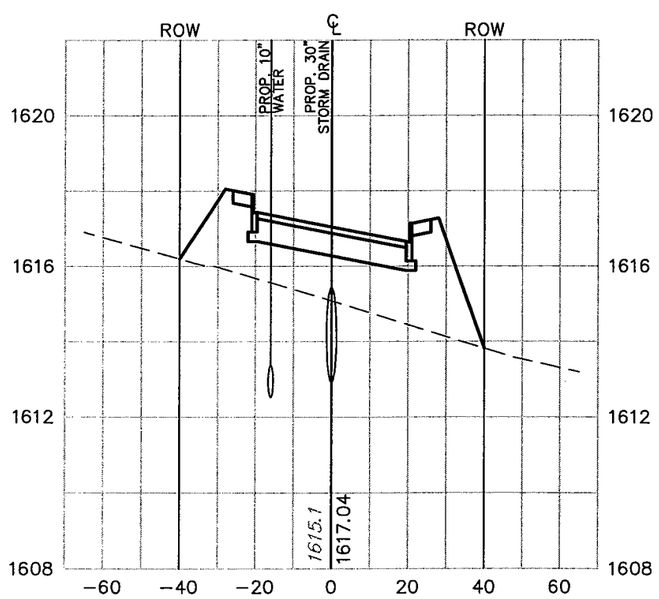

39+00

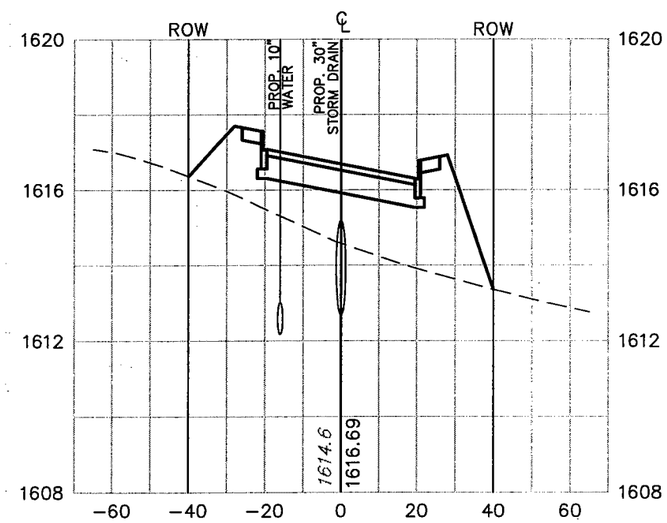

39+50

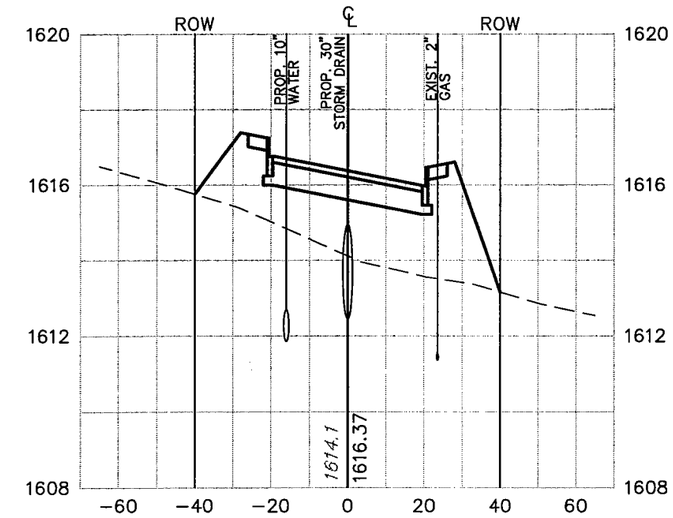

SCALE : 1" = 40' HORZ.
1" = 4' VERT.

Lockwood, Andrews & Newnam, Inc.

STATE OF TEXAS
DAVID ANN GREEN
79721
LICENSED
PROFESSIONAL ENGINEER

David Green 9-30-04

City of Kerrville
Main Street Extension Project

MAIN STREET CROSS SECTIONS
STA. 37+27.19 TO STA. 39+50

No.	Date	Revisions	App.

Scale 1" = 40' Date: Aug. 2004
Designed by: T.C.
Drawn by: M.K.
Checked by: P.J.
Approved by: D.G.
Project No. 2178-20-001

C30

40+00

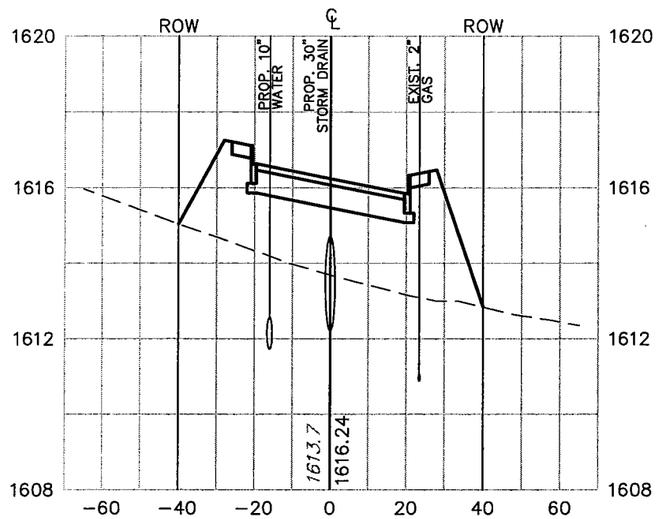

40+50

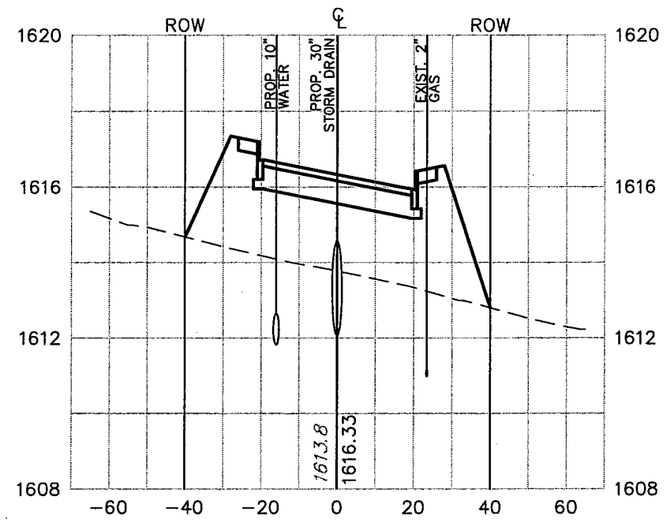

41+50

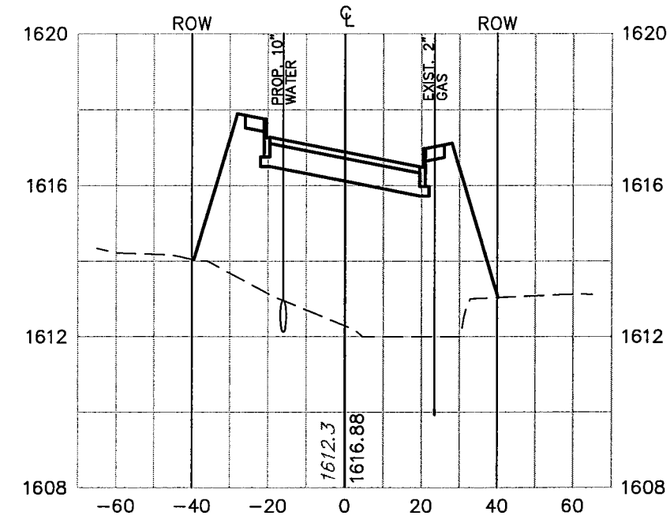

(SEE SHEET C42)

42+00

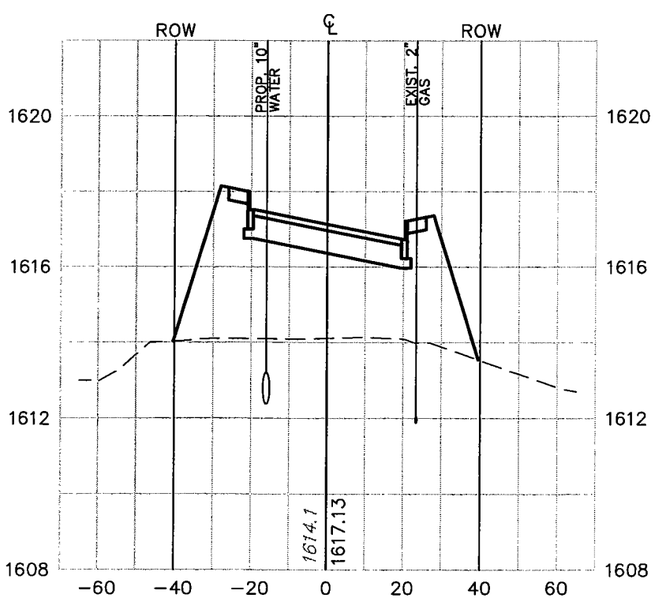

SCALE : 1" = 40' HORZ.
1" = 4' VERT.

Lockwood, Andrews & Newnam, Inc.

STATE OF TEXAS
DAWN ANN GREEN
79721
LICENSED
PROFESSIONAL ENGINEER

Dawn Green 9-20-04

City of Kerrville
Main Street
Extension
Project

MAIN STREET CROSS SECTIONS
STA. 40+00 TO STA. 42+00

No.	Date	Revisions	App.

Scale 1" = 40' Date: Aug. 2004
Designed by: T.C.
Drawn by: M.K.
Checked by: P.J.
Approved by: D.G.
Project No. 2178-20-001

C31

43+00

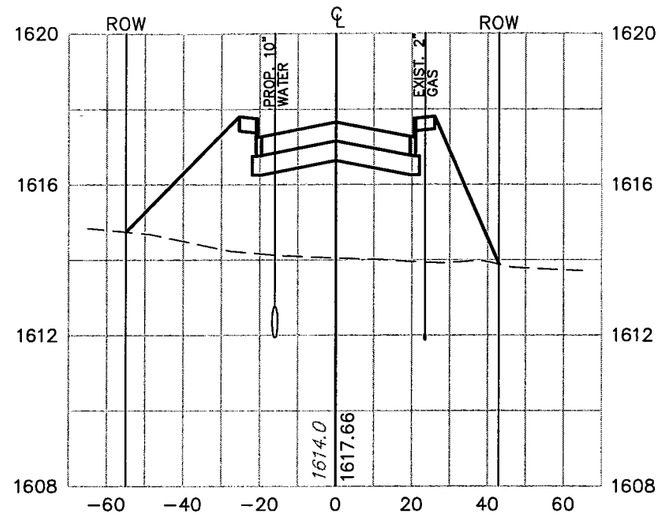

43+50

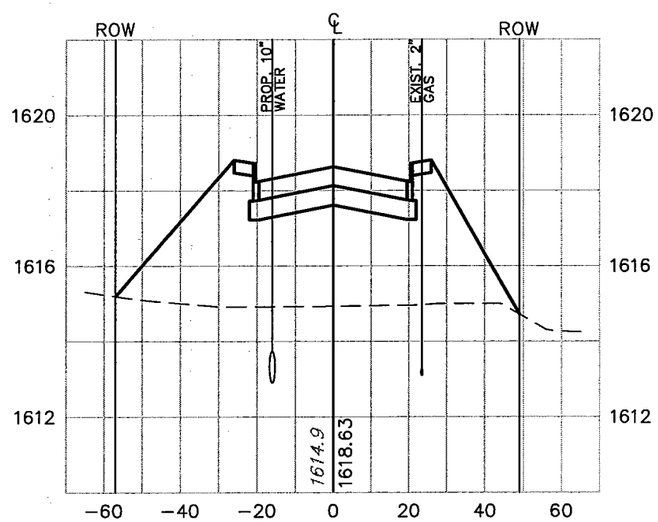

44+00

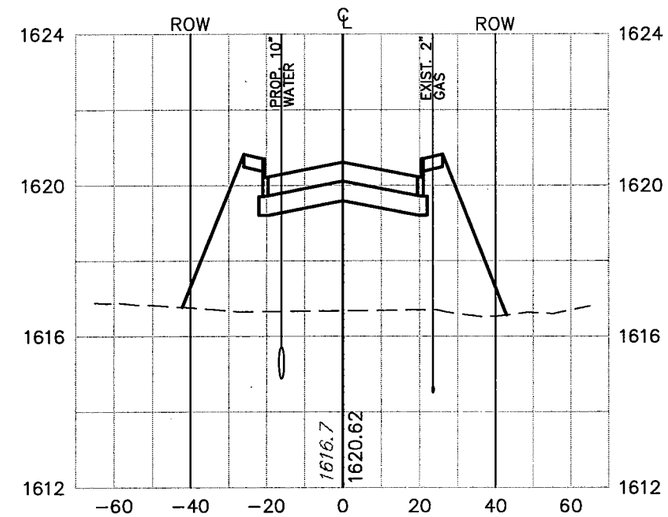

44+50

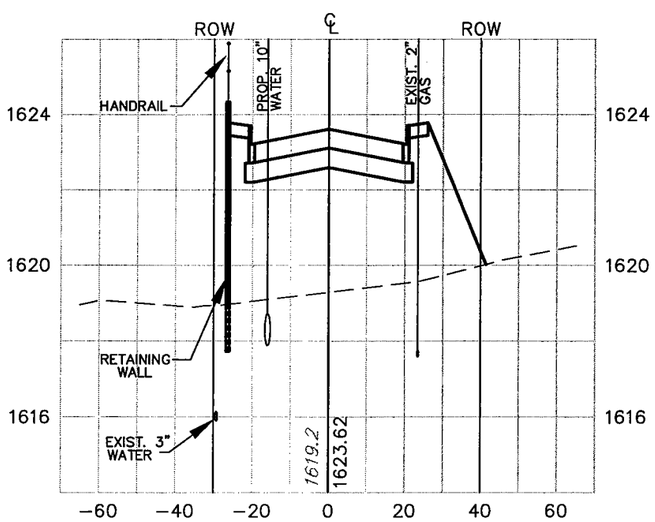

45+00

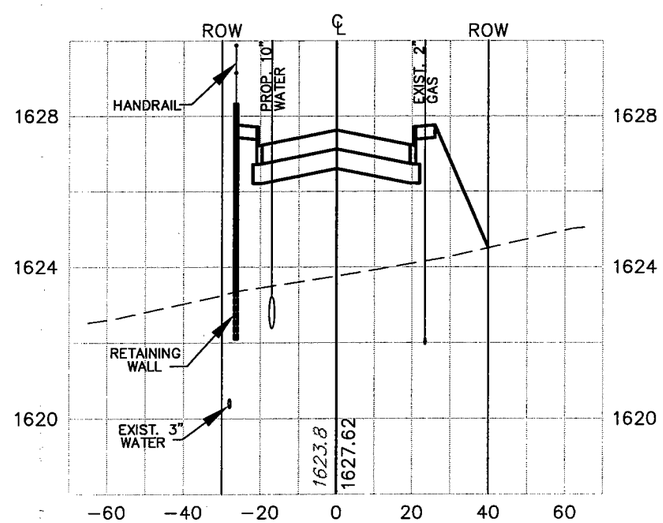

45+50

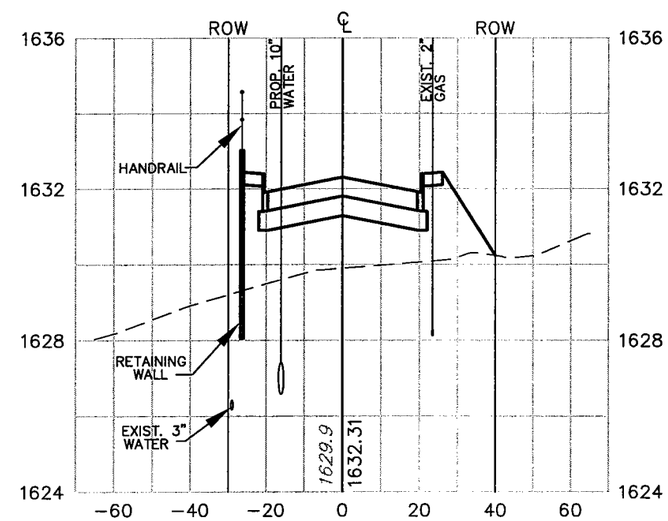

SCALE : 1" = 40' HORZ.
1" = 4' VERT.

Lockwood, Andrews & Newnam, Inc.

STATE OF TEXAS
RAHN AN GREEN
79721
LICENSED
PROFESSIONAL ENGINEER

City of Kerrville
Main Street
Extension
Project

MAIN STREET CROSS SECTIONS
STA. 43+00 TO STA. 45+50

No.	Date	Revisions	App.

Scale: 1" = 40' Date: Aug. 2004
Designed by: T.C.
Drawn by: M.K.
Checked by: P.J.
Approved by: D.G.
Project No. 2178-20-001

C32

0+50

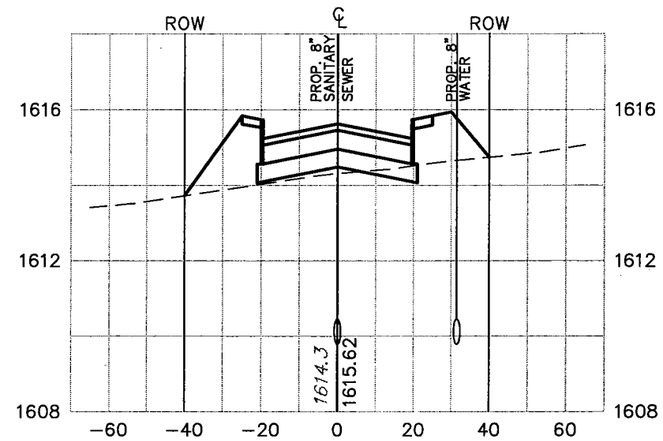

1+00

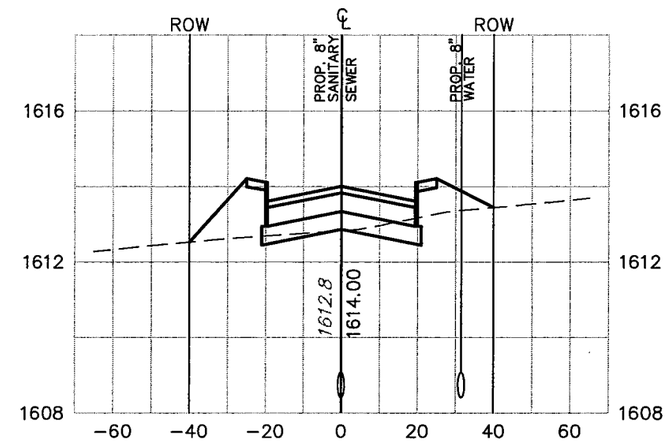

1+50

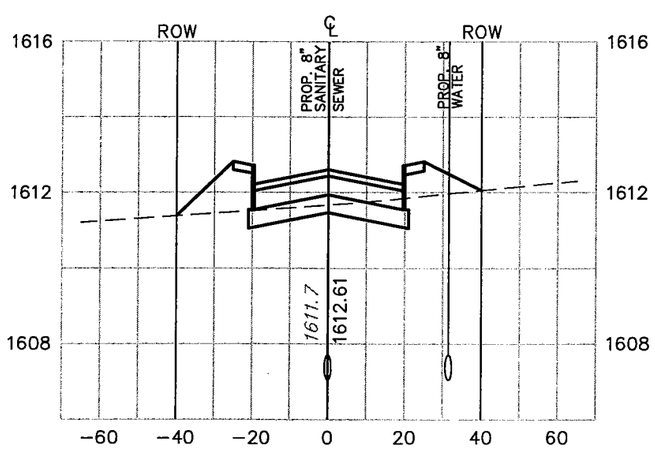

2+00

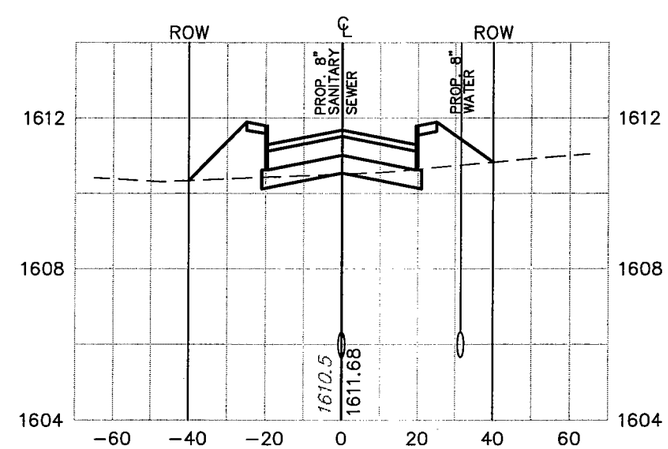

2+50

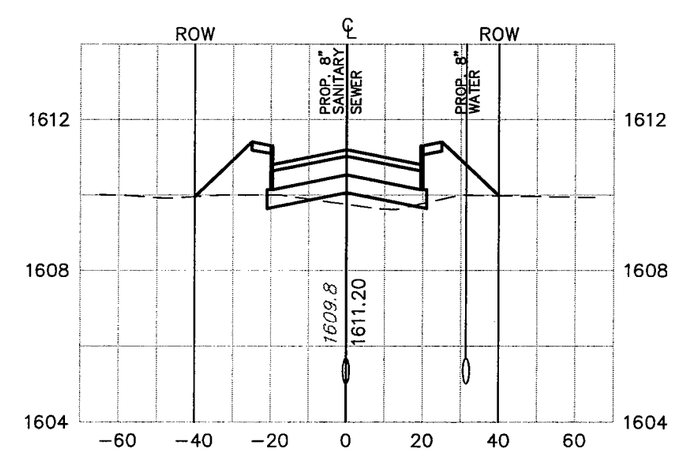

SCALE : 1" = 40' HORZ.
1" = 4' VERT.

Lockwood, Andrews & Newnam, Inc.

STATE OF TEXAS
DAWN ANN GREEN
79721
LICENSED
PROFESSIONAL ENGINEER

Dawn Green 9-30-04

City of Kerrville
Main Street
Extension
Project

CLEARWATER PASEO
CROSS SECTIONS
STA. 0+00 TO STA. 2+50

No.	Date	Revisions	App.

Scale: 1" = 40' Date: Aug. 2004
Designed by: T.C.
Drawn by: M.K.
Checked by: P.J.
Approved by: D.G.
Project No. 2178-20-001

C33

3+00

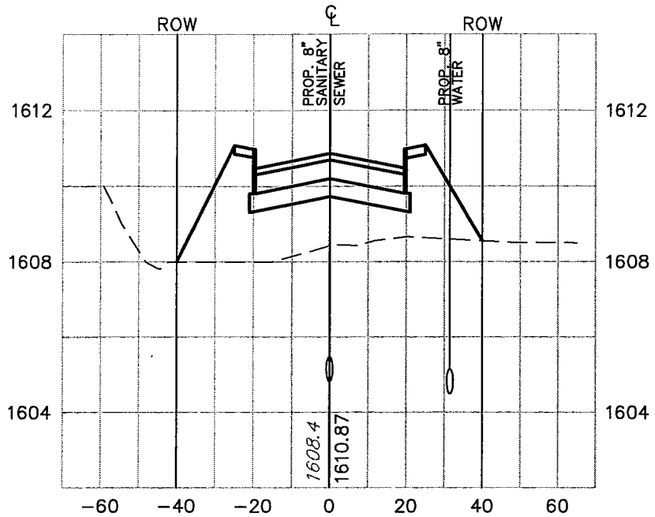

3+50

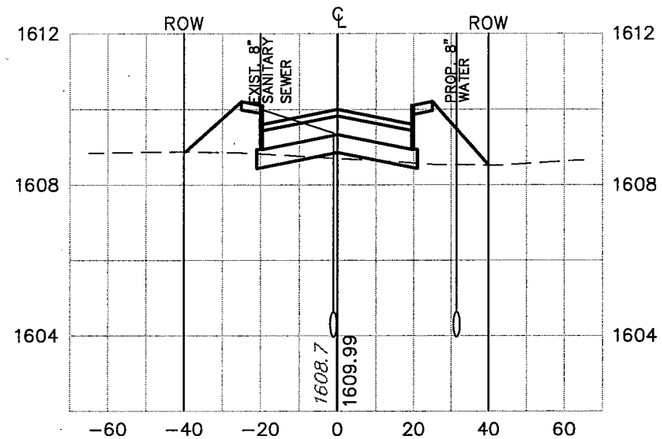

4+00

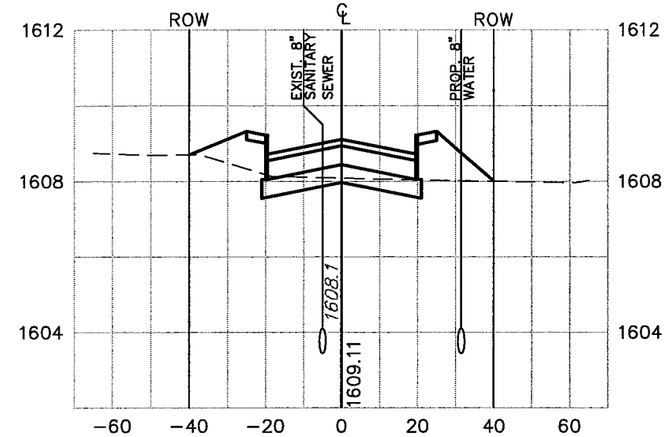

4+50

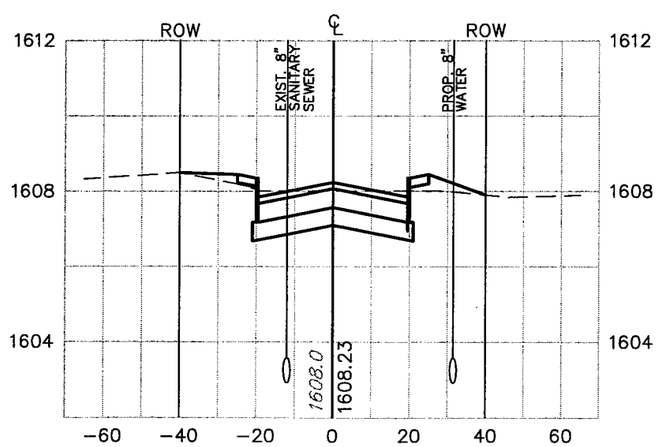

4+64

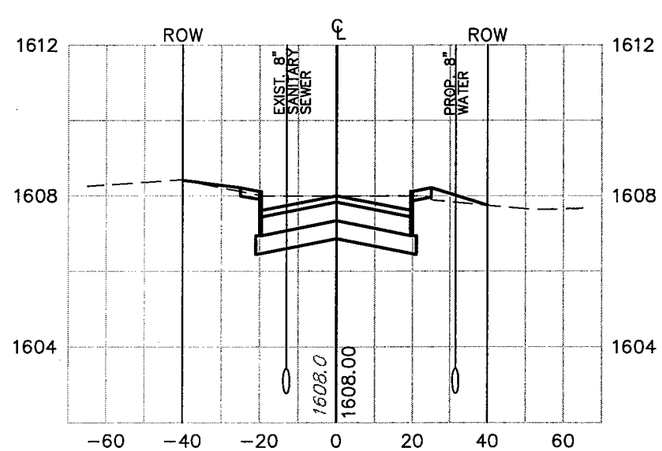

SCALE : 1" = 40' HORZ.
1" = 4' VERT.

Lockwood, Andrews & Newnam, Inc.

STATE OF TEXAS
DAWN ANN GREEN
79721
LICENSED
PROFESSIONAL ENGINEER

Dawn Green 9-30-04

City of Kerrville
Main Street
Extension
Project

CLEARWATER PASEO
CROSS SECTIONS
STA. 3+00 TO STA. 4+63.43

No.	Date	Revisions	App.

Scale: 1" = 40' Date: Aug. 2004
Designed by: T.C.
Drawn by: M.K.
Checked by: P.J.
Approved by: D.G.
Project No. 2178-20-001

C34

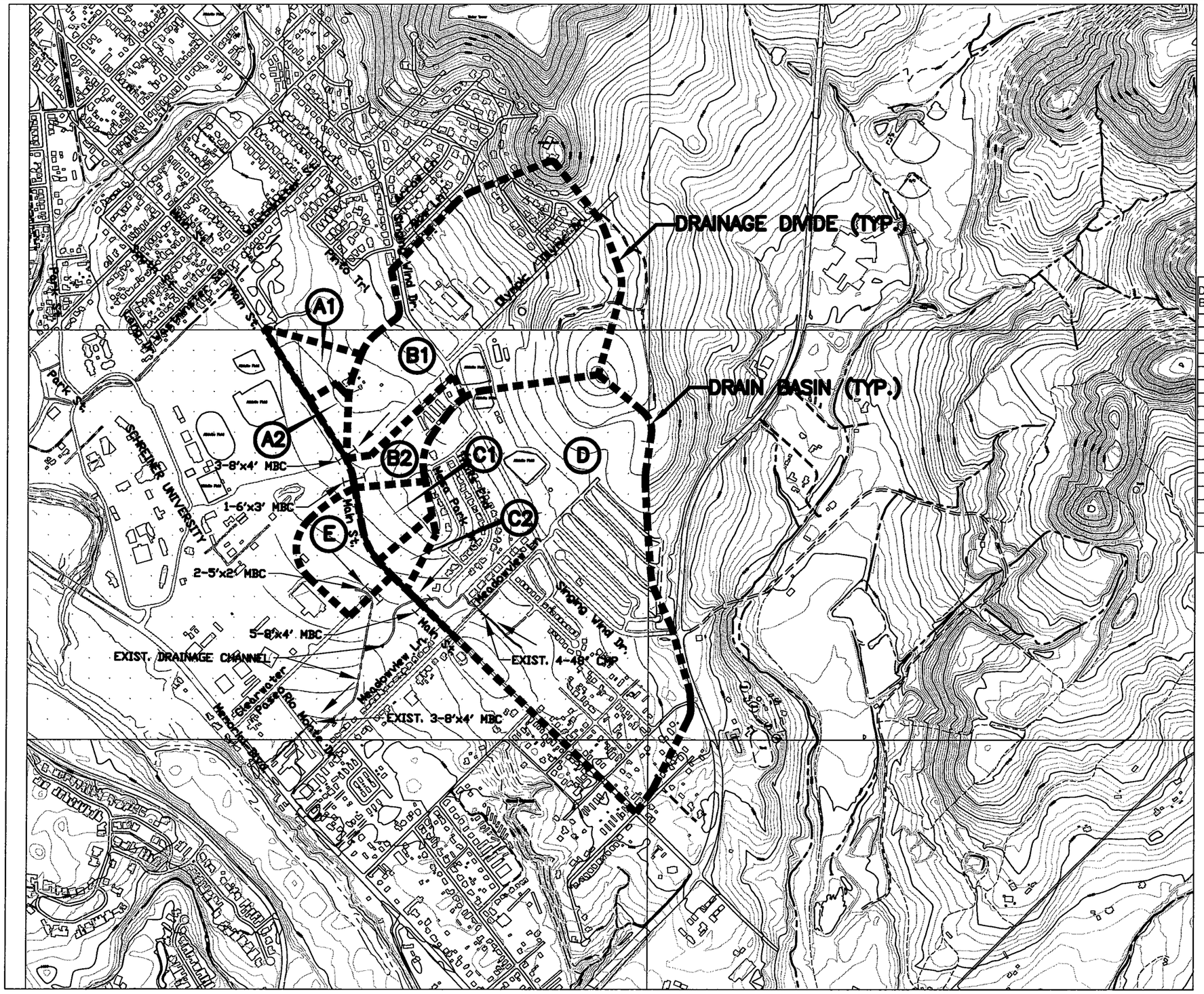

N

SCALE : 1" = 1000'

HYDROLOGY

DRAIN BASIN	AREA (Ac.)	Tc (Min.)	C	I15 (in./hr.)	Q15 (cfs)	I50 (in./hr.)	Q50 (cfs)
		–		–	–	–	–
A1	6.90	15	0.5	6.8	23.46	–	–
A2	3.54	15	0.5	6.8	12.04	–	–
		–	–	–	–	–	–
B1	96.86	21	0.6	–	–	6.9	401.00
B2	14.14	10	0.6	–	–	8.2	69.50
		–		–	–	–	–
C1	8.32	15	0.5	6.8	28.29	–	–
C2	6.08	15	0.5	6.8	20.67	–	–
D	165.3	23	0.6	–	–	6.9	684.34
E	14.9	17	0.6	6.4	57.22	7.7	68.84

NOTE: RAINFALL INTENSITY BASED ON TXDOT DRAINAGE CRITERIA.

NOTES:

1. KERRVILLE 2003 AERIALS AND PLANIMETRIC MAPS USED FOR DRAINAGE STUDY & BACKGROUND FOR THIS DRAWING

2. DRAINAGE DESIGN IS IN ACCORDANCE WITH CITY OF KERRVILLE DESIGN MANUAL FOR STORM DRAINAGE FACILITIES.

Lockwood, Andrews & Newnam, Inc.

STATE OF TEXAS
DAWN ANN GREEN
79721
LICENSED
PROFESSIONAL ENGINEER

Dawn A Green 9-30-04

City of Kerrville
Main Street
Extension
Project

DRAINAGE AREA MAP

No.	Date	Revisions	App.

Scale: Date:
Designed by: T.C.
Drawn by: M.K.
Checked by: P.J.
Approved by: D.G.
Project No. 2178-20-001

C35

NOTES:
1. ALL CURB INLETS RANGING IN SIZE FROM 10' TO 30' SHALL HAVE FILTER INSERTS. SEE DRAIN SHEET FOR DETAILS.
2. FOR OIL/WATER SEPARATOR SEE DETAILS.

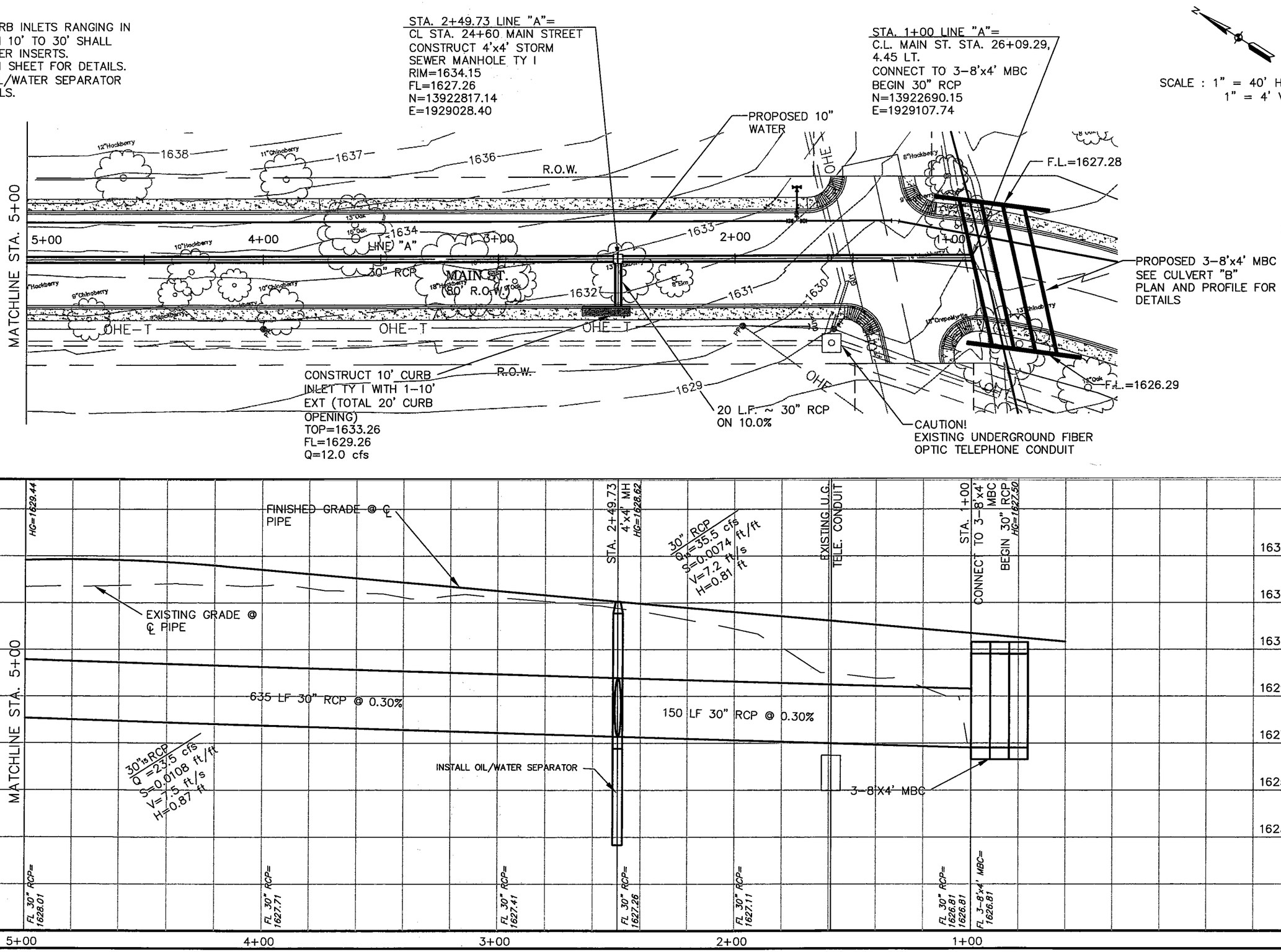

Lockwood, Andrews & Newnam, Inc.

STATE OF TEXAS
DAWN ANN GREEN
79721
LICENSED PROFESSIONAL ENGINEER

Dawn Green 9-30-04

City of Kerrville
Main Street Extension Project

STORM DRAINAGE
LINE "A" PLAN & PROFILE
STA. 1+00 TO
STA. 5+00

No.	Date	Revisions	App.

Scale: 1" = 40' Date: Aug. 2004
Designed by: T.C.
Drawn by: M.K.
Checked by: P.J.
Approved by: D.G.
Project No. 2178-20-001

C36

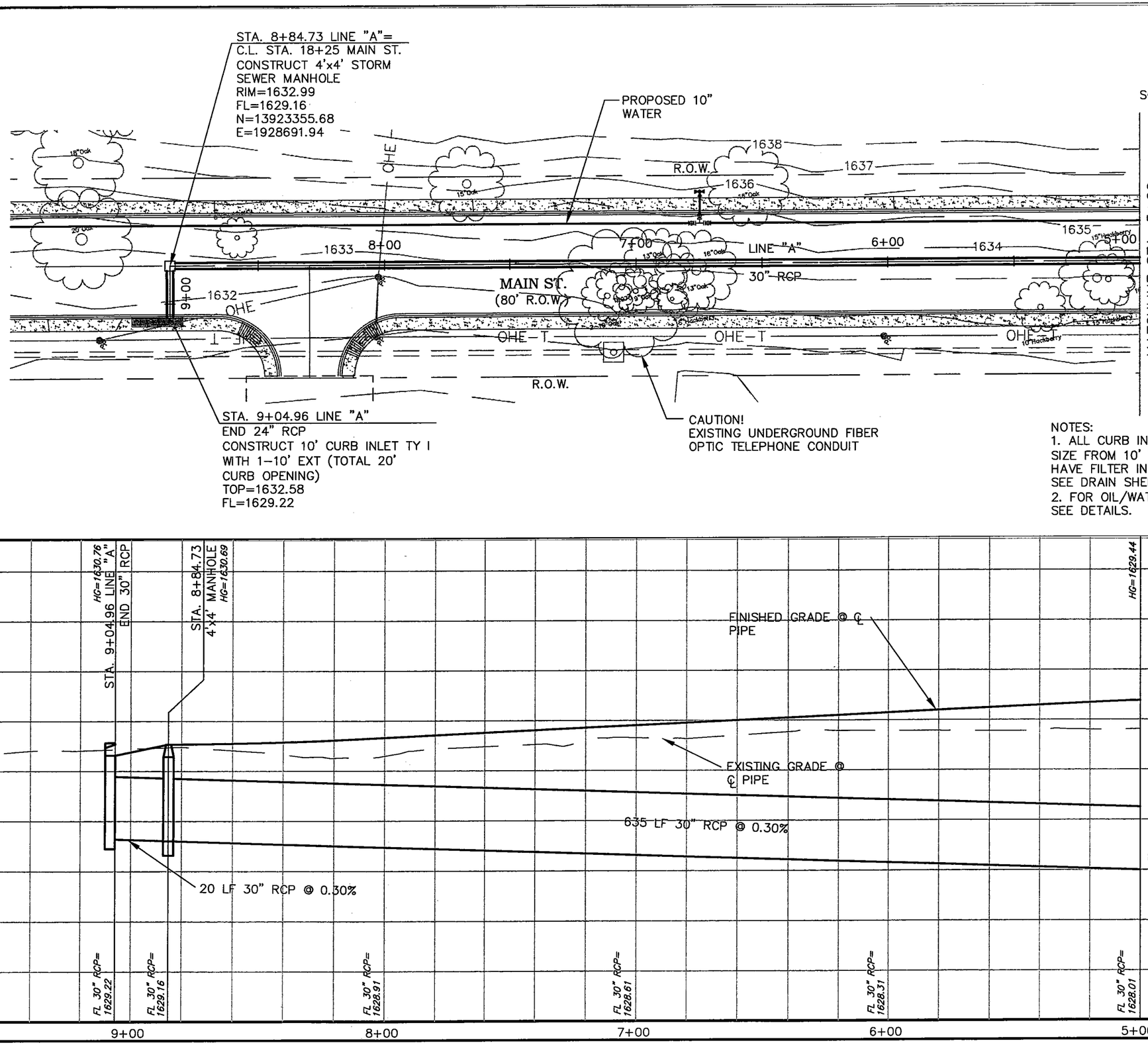

NOTES:
1. ALL CURB INLETS RANGING IN SIZE FROM 10' TO 30' SHALL HAVE FILTER INSERTS. SEE DRAIN SHEET FOR DETAILS.
2. FOR OIL/WATER SEPARATOR SEE DETAILS.

Lockwood, Andrews & Newnam, Inc.

STATE OF TEXAS
DAWN ANN GREEN
79721
LICENSED
PROFESSIONAL ENGINEER

City of Kerrville
Main Street
Extension
Project

LINE "A" PLAN & PROFILE
STA. 5+00 TO
END

No.	Date	Revisions	App.

Scale: -
Date: Aug. 2004
Designed by: T.C.
Drawn by: M.K.
Checked by: P.J.
Approved by: D.G.
Project No. 2178-20-001

C37

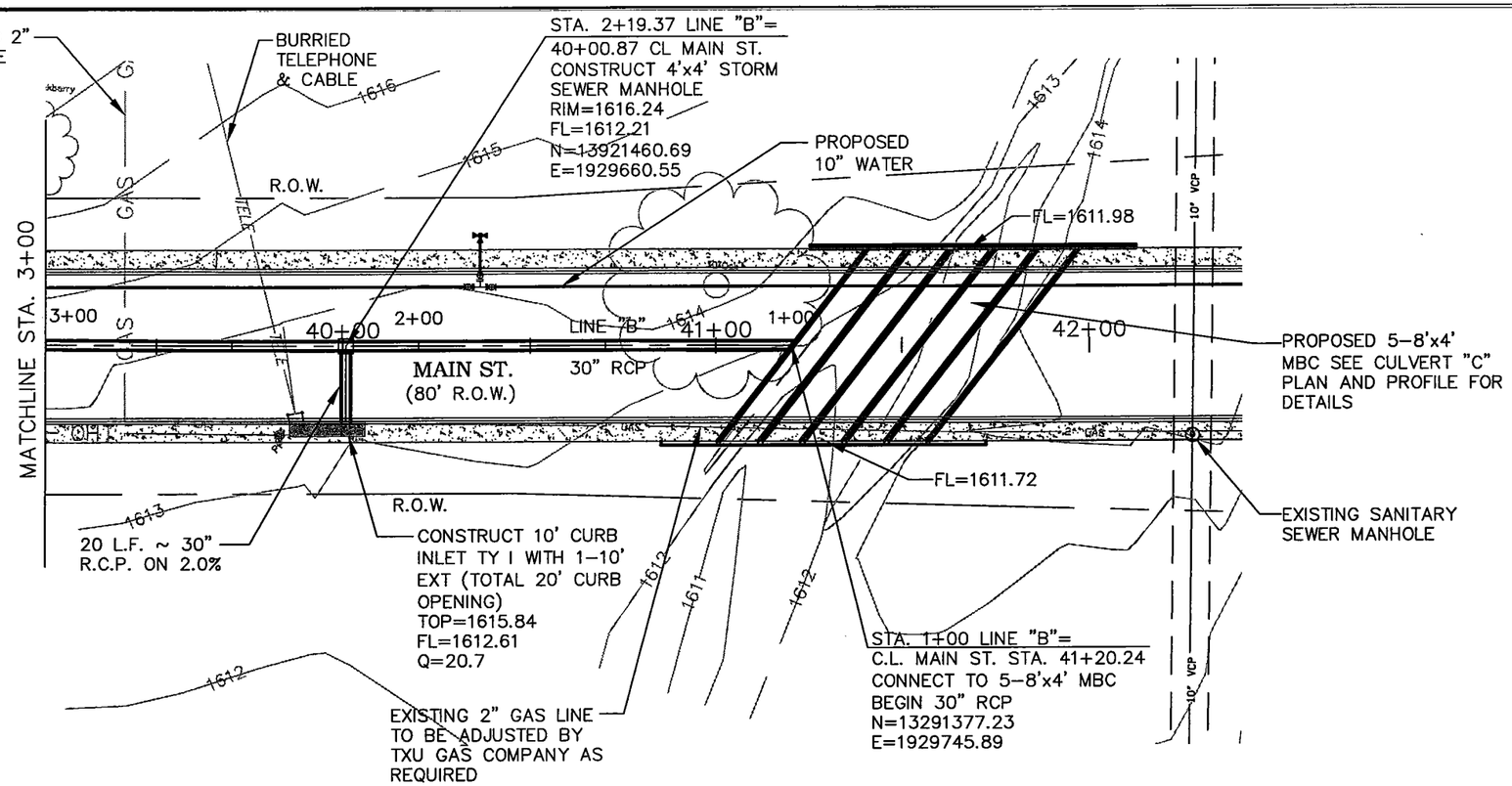

SCALE : 1" = 40' HORZ.
1" = 4' VERT.

NOTES:
1. ALL CURB INLETS RANGING IN SIZE FROM 10' TO 30' SHALL HAVE FILTER INSERTS. SEE DRAIN SHEET FOR DETAILS.
2. FOR OIL/WATER SEPARATOR SEE DETAILS.
3. EXISTING GAS LINE TO BE ADJUSTED BY TXU GAS COMPANY TO AVOIDCONFLICT WITH CURB INLET AND PIPE.

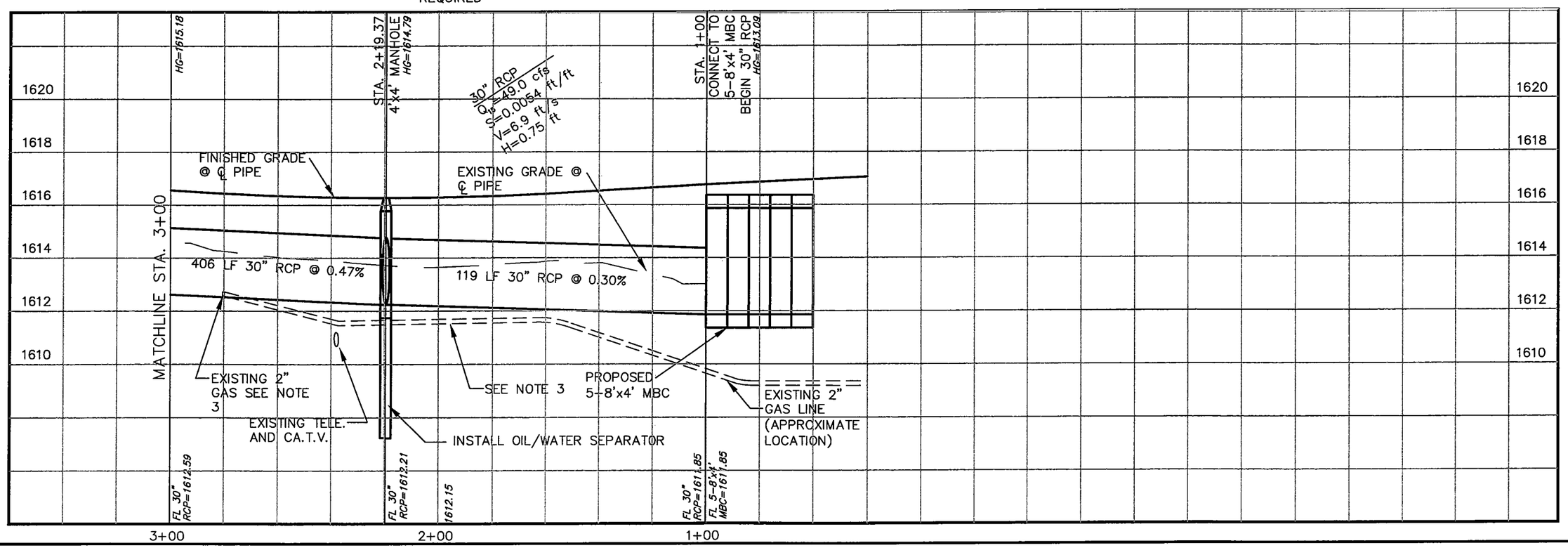

Lockwood, Andrews & Newnam, Inc.

STATE OF TEXAS
DAWN ANN GREEN
79721
LICENSED PROFESSIONAL ENGINEER

Dawn Green 9-30-04

City of Kerrville
Main Street Extension Project

LINE "B" PLAN & PROFILE
STA. 1+00 TO STA. 3+00

No.	Date	Revisions	App.

Scale - Date: Aug. 2004
Designed by: T.C.
Drawn by: M.K.
Checked by: P.J.
Approved by: D.G.
Project No. 2178-20-001

C38

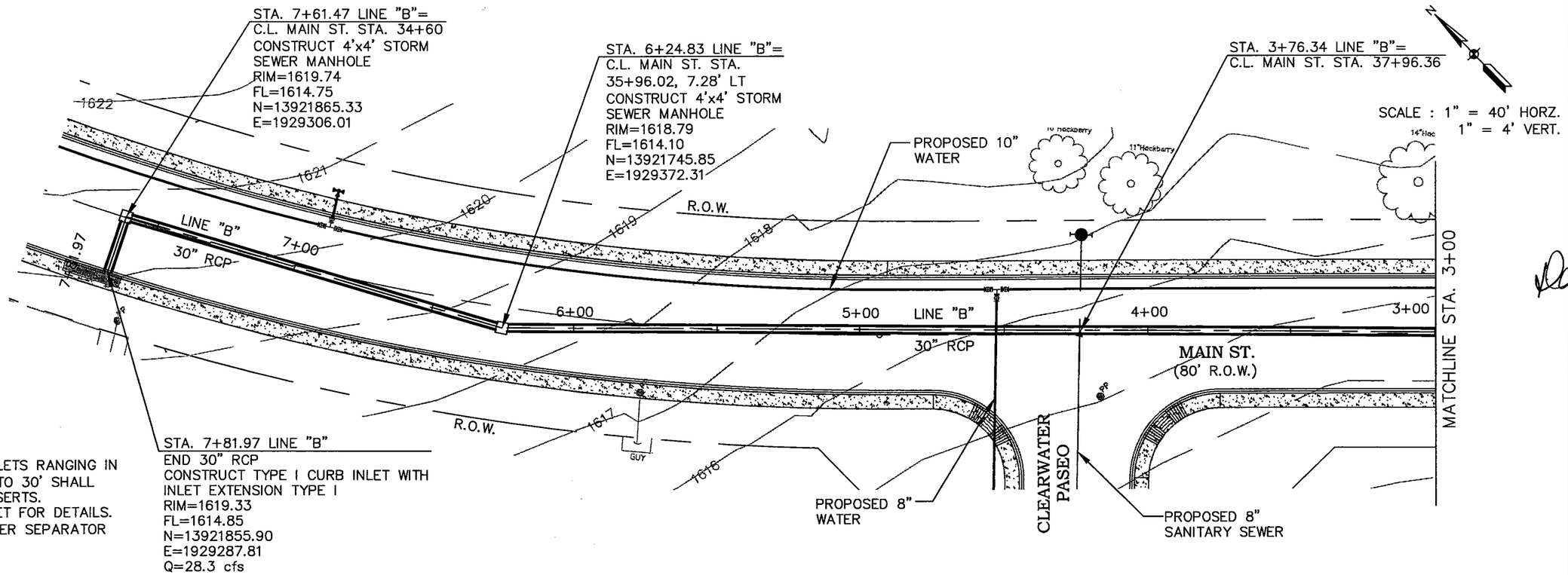

NOTES:
1. ALL CURB INLETS RANGING IN SIZE FROM 10' TO 30' SHALL HAVE FILTER INSERTS. SEE DRAIN SHEET FOR DETAILS.
2. FOR OIL/WATER SEPARATOR SEE DETAILS.

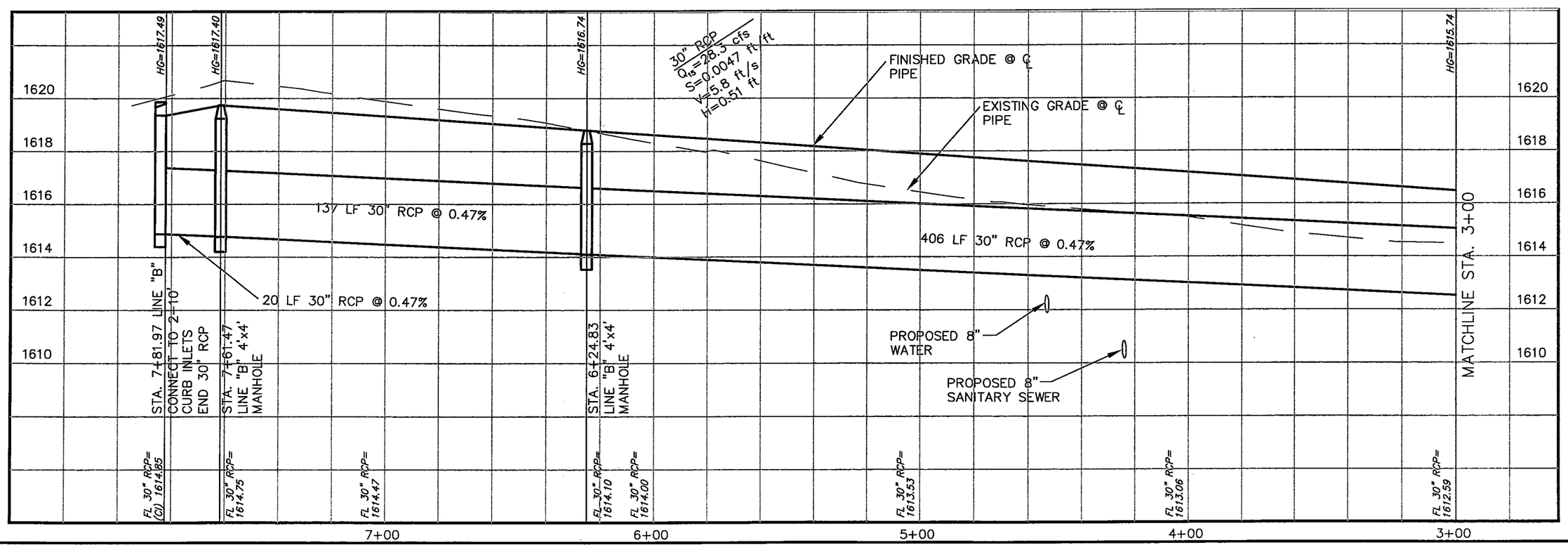

Lockwood, Andrews & Newnam, Inc.

STATE OF TEXAS
DAWN ANN GREEN
79721
LICENSED
PROFESSIONAL ENGINEER

Dawn Green 9-30-04

City of Kerrville
Main Street
Extension
Project

LINE "B" PLAN & PROFILE
STA. 3+00 TO
END

No.	Date	Revisions	App.

Scale - Date: Aug. 2004
Designed by: T.C.
Drawn by: M.K.
Checked by: P.J.
Approved by: D.G.
Project No. 2178-20-001

C39

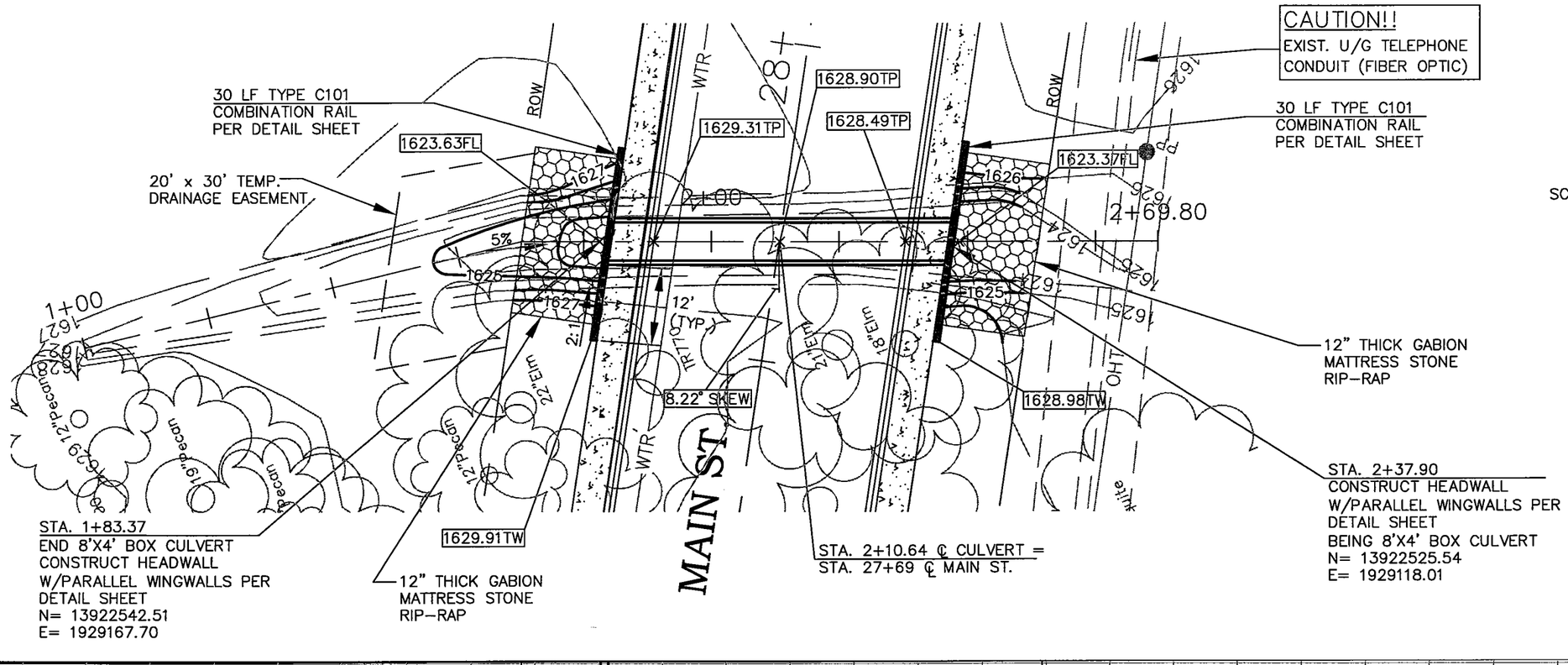

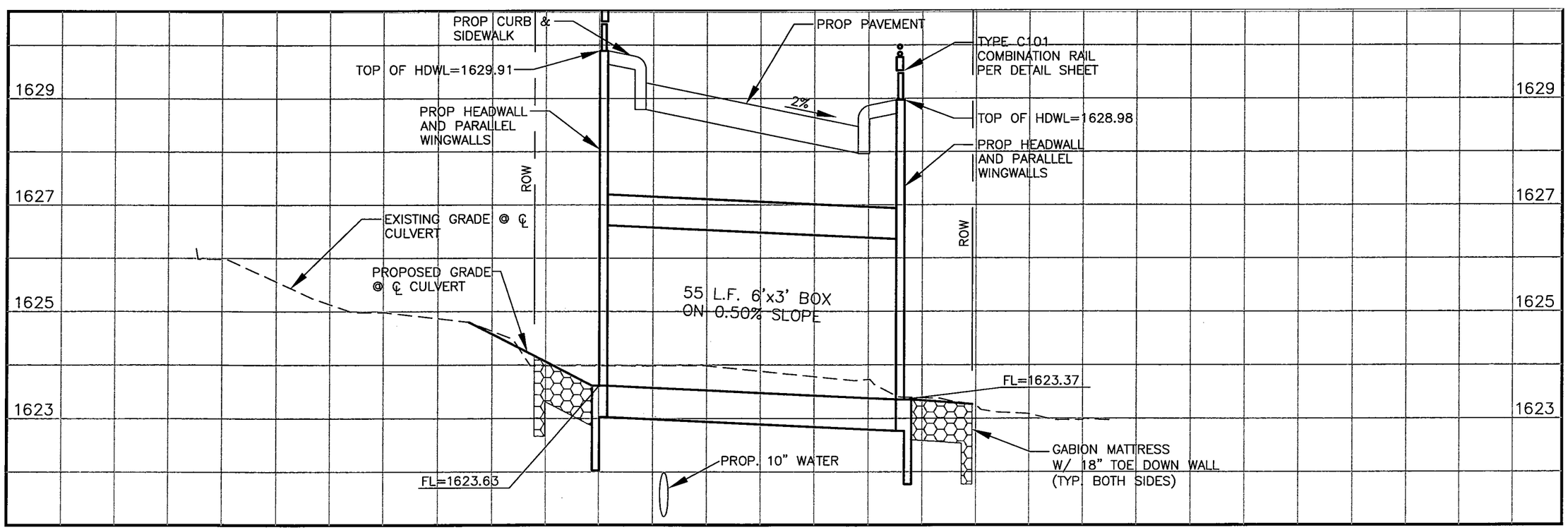

Lockwood, Andrews & Newnam, Inc.

STATE OF TEXAS
DAWN ANN GREEN
79721
LICENSED
PROFESSIONAL ENGINEER

City of Kerrville
Main Street Extension Project

MAIN STREET
CULVERT "A"
PLAN & PROFILE

No.	Date	Revisions	App.

Scale: 1" = 20' Date: Aug. 2004
Designed by T.C.
Drawn by M.K.
Checked by P.J.
Approved by D.G.
Project No. 2178-20-001

C40

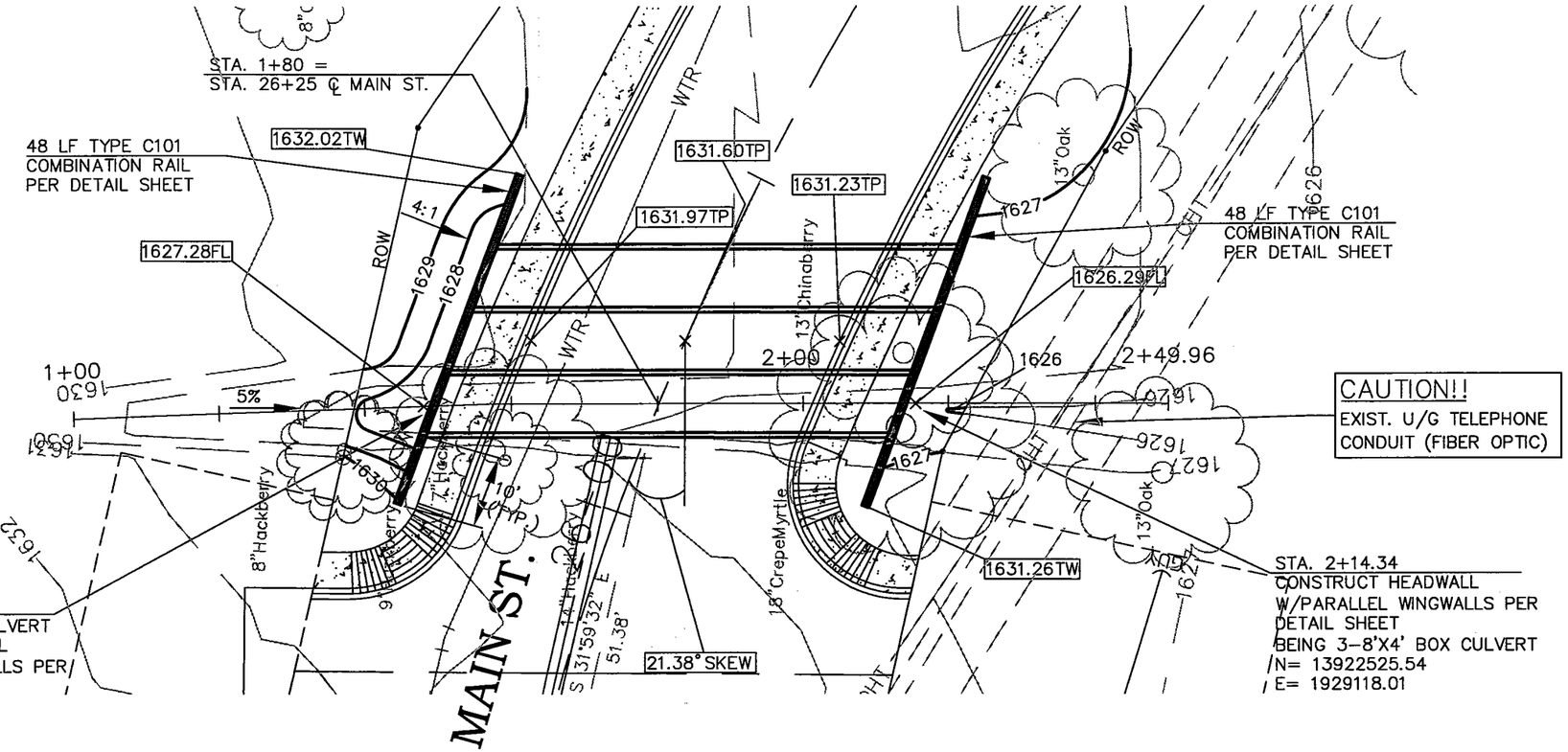

SCALE : 1" = 20' HORZ.
1" = 2' VERT.

NOTE:
TEL. CONDUIT AND CONCRETE CAP SHOWN IN PROFILE ARE NOT SHOWN TO SCALE. REFER TO CALLOUTS FOR ACCURATE ELEVATIONS.

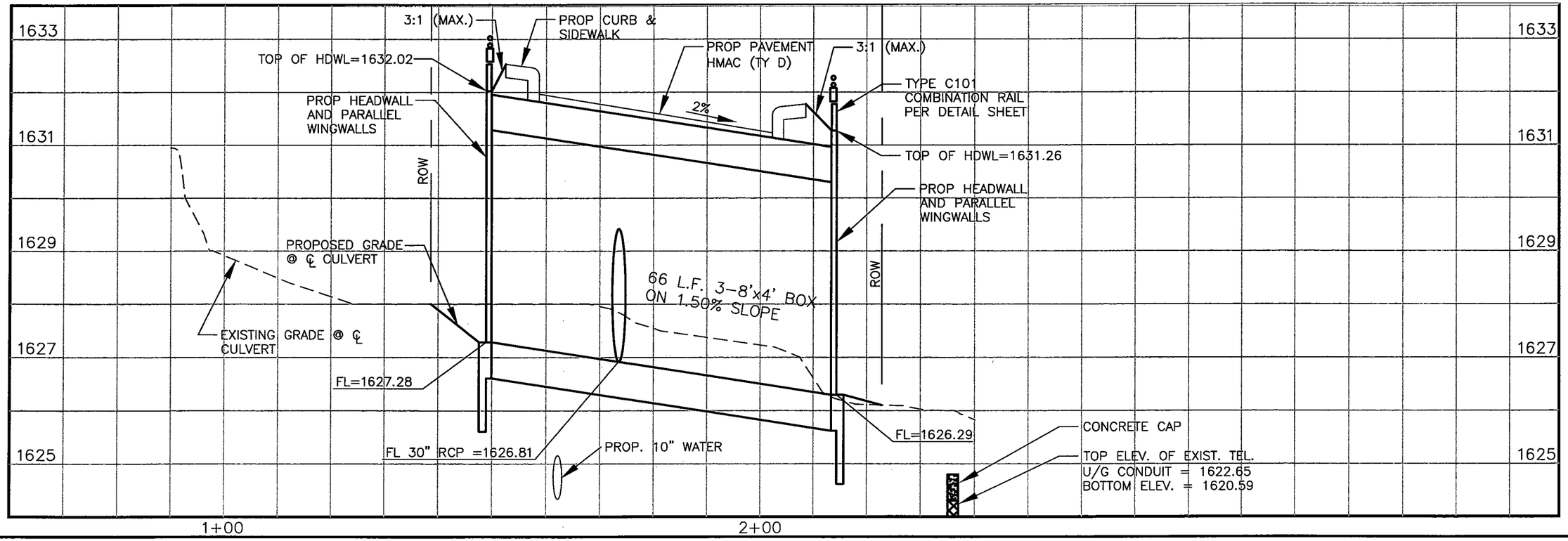

Lockwood, Andrews & Newnam, Inc.

STATE OF TEXAS
DAWN ANN GREEN
79721
LICENSED
PROFESSIONAL ENGINEER

Dawn Green 9-30-04

City of Kerrville
Main Street
Extension
Project

MAIN STREET
CULVERT "B"
PLAN & PROFILE

No.	Date	Revisions	App.

Scale 1" = 20' Date Aug. 2004
Designed by: T.C.
Drawn by: M.K.
Checked by: P.J.
Approved by: D.G.
Project No. 2178-20-001

C41

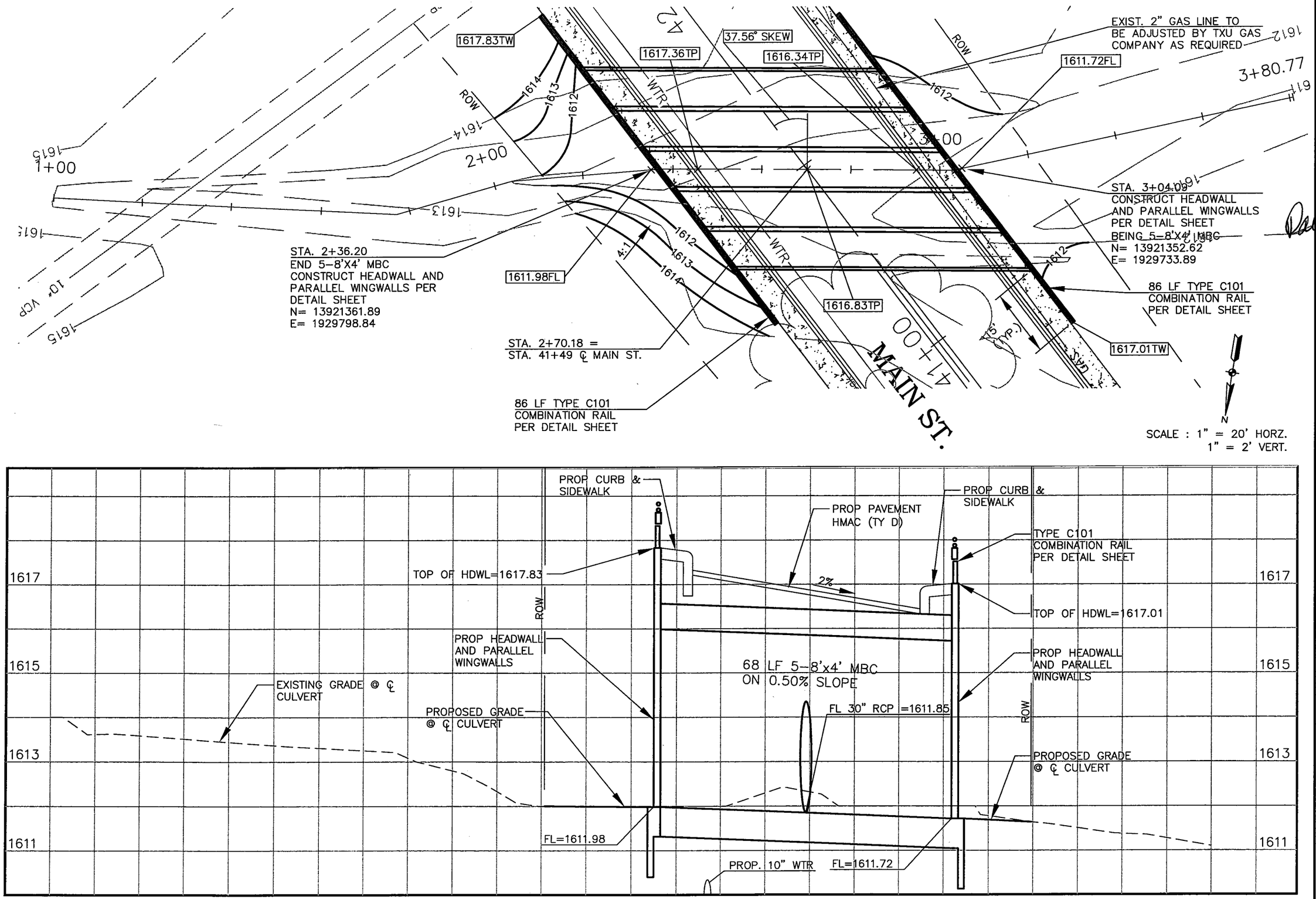

Lockwood, Andrews & Newnam, Inc.

STATE OF TEXAS
DAVID ANN GREEN
79721
LICENSED
PROFESSIONAL ENGINEER

David Green 9-20-04

City of Kerrville
Main Street
Extension
Project

MAIN STREET
CULVERT "C"
PLAN & PROFILE

No.	Date	Revisions	App.

Scale: 1" = 20' Date: Aug. 2004
Designed by: T.C.
Drawn by: M.K.
Checked by: P.J.
Approved by: D.G.
Project No. 2178-20-001

C42

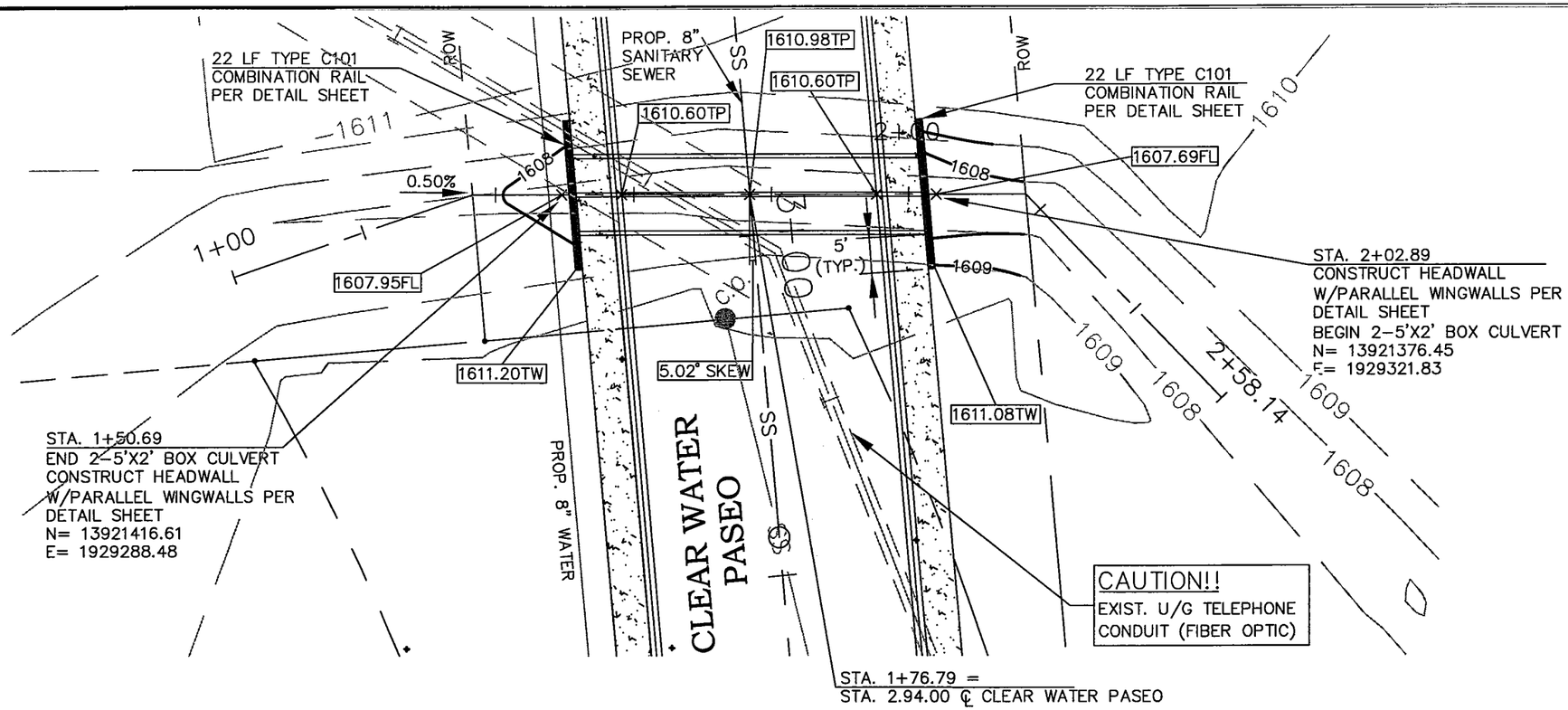

SCALE : 1" = 20' HORZ.
1" = 2' VERT.

NOTE:
TEL. CONDUIT AND CONCRETE CAP SHOWN IN PROFILE ARE NOT SHOWN TO SCALE. REFER TO CALLOUTS FOR ACCURATE ELEVATIONS.

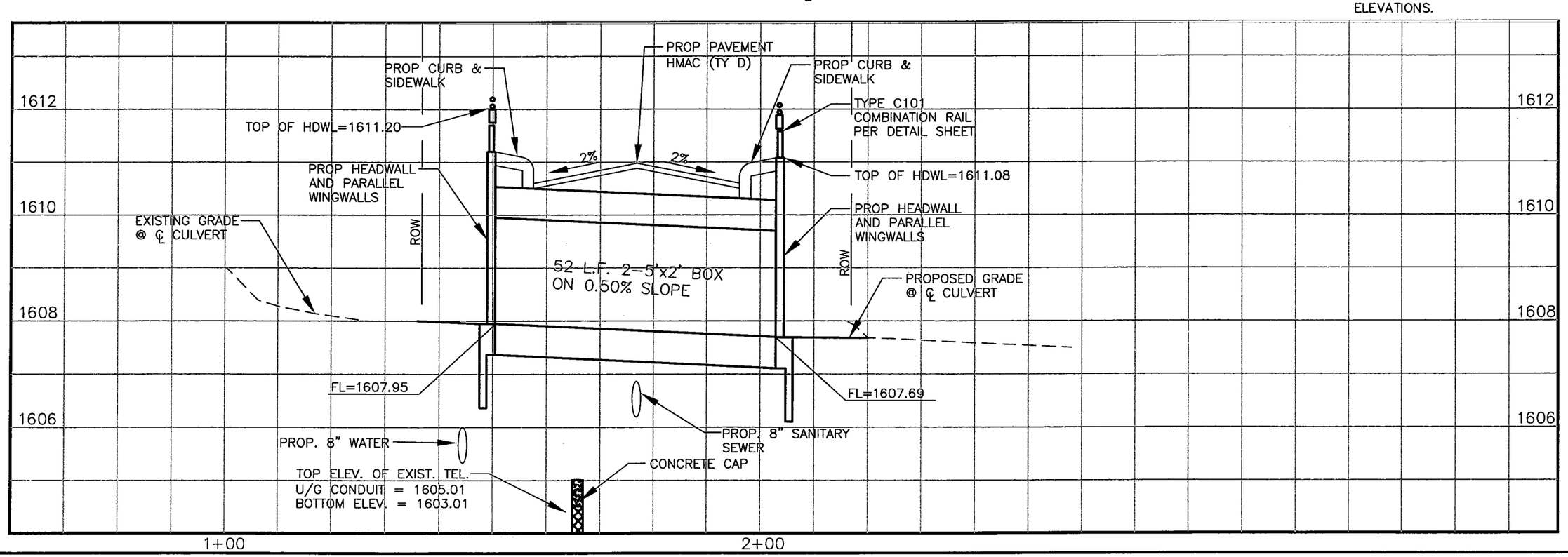

Lockwood, Andrews & Newnam, Inc.

STATE OF TEXAS
DAWN ANN GREEN
79721
LICENSED
PROFESSIONAL ENGINEER

Dawn Green 9-20-04

City of Kerrville
Main Street
Extension
Project

CLEARWATER PASEO
CULVERT "D"
PLAN & PROFILE

No.	Date	Revisions	App.

Scale 1" = 20' Date: Aug. 2004
Designed by: T.C.
Drawn by: M.K.
Checked by: P.J.
Approved by: D.G.
Project No. 2178-20-001

C43

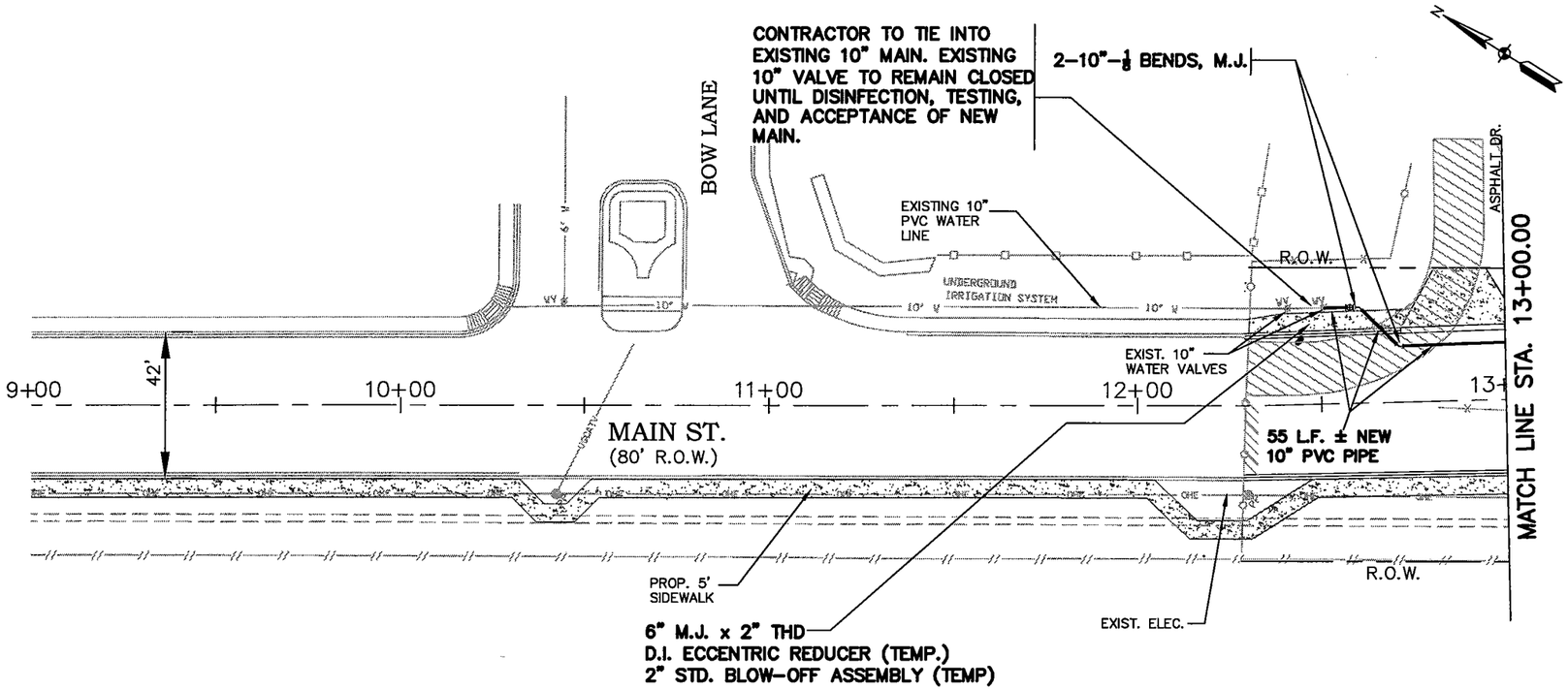

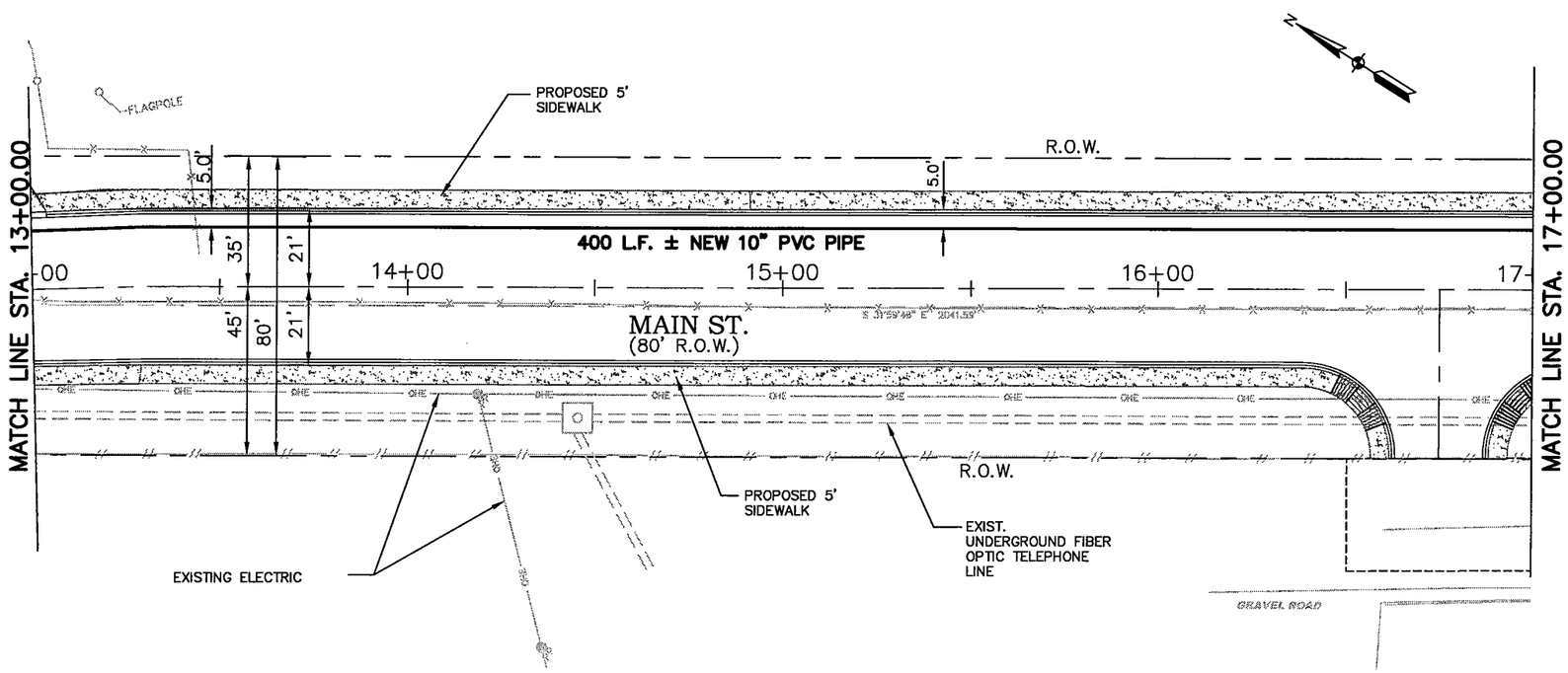

NOTE:
1) ALL DIMENSIONS AND COORDINATES ARE TO BACK OF CURB UNLESS OTHERWISE NOTED.
2) SEE WATER LINE NOTES ON SHEET C2.

SCALE : 1" = 40'

Lockwood, Andrews & Newnam, Inc.

STATE OF TEXAS
DAWN ANN GREEN
79721
LICENSED PROFESSIONAL ENGINEER

Dawn Green 9-30-04

City of Kerrville
Main Street Extension Project

MAIN STREET
WATER DISTRIBUTION SYSTEM
STA. 9+00 TO STA. 17+00

No.	Date	Revisions	App.

Scale 1" = 40' Date Aug. 2004
Designed by: T.C.
Drawn by: M.K.
Checked by: P.J.
Approved by: D.G.
Project No. 2178-20-001

C44

L:\119731\120-02178-005\PROD\5_0_DESIGN-REFERENCE\5_13_DRAWINGS\FP\C40-Water

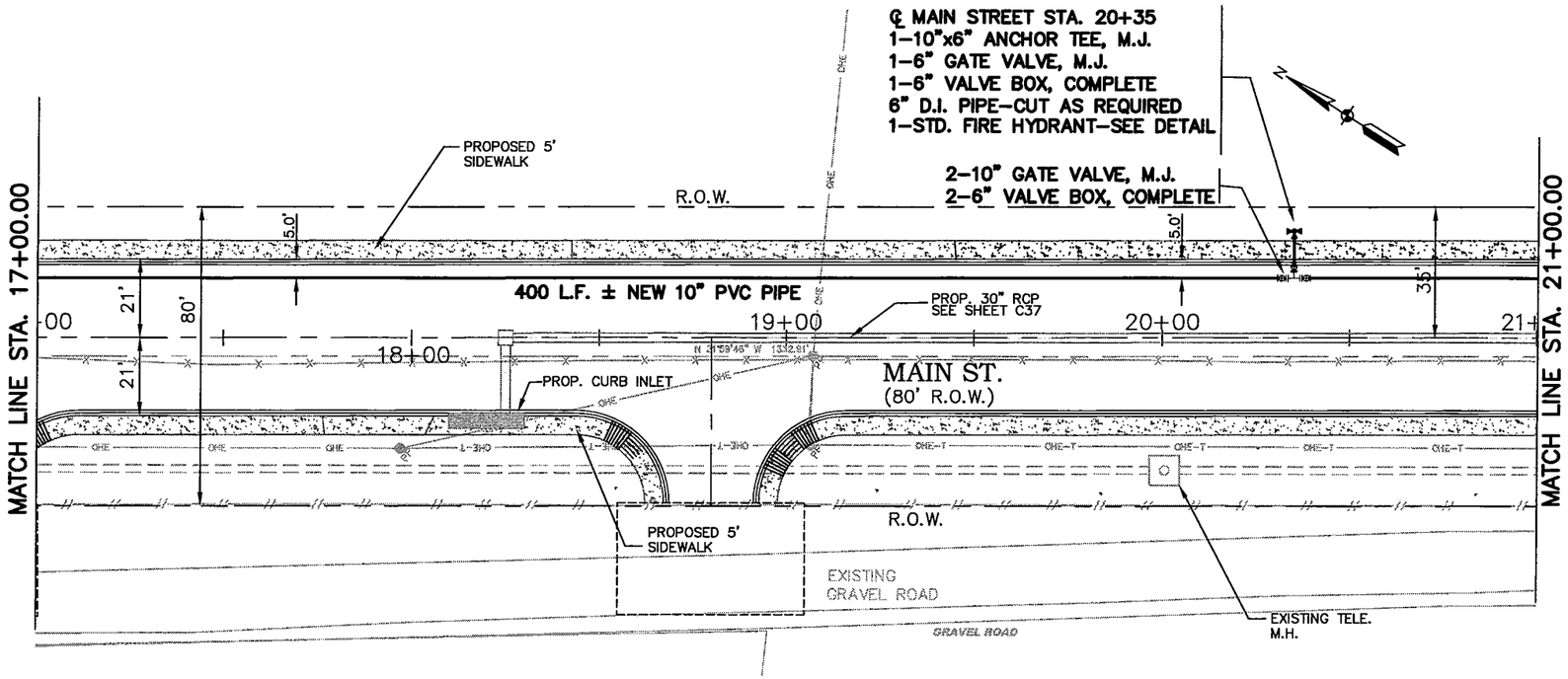

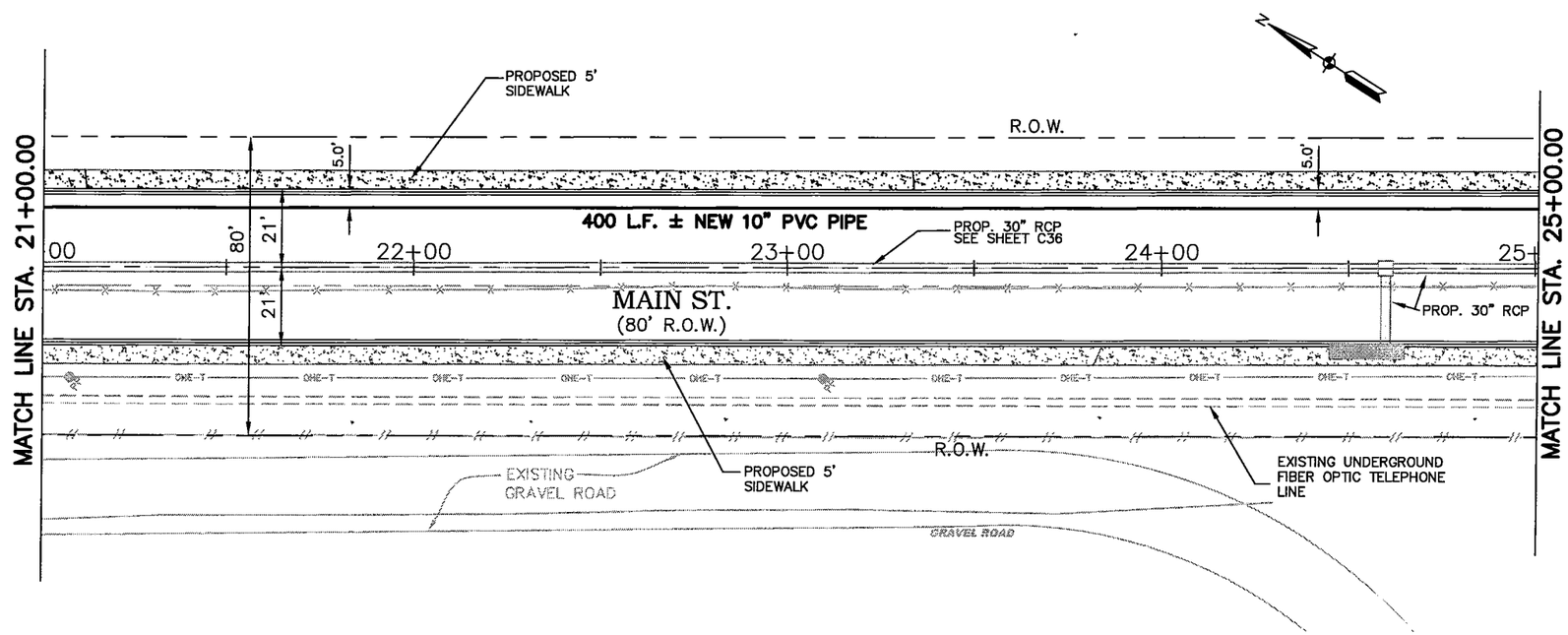

NOTE:
1) ALL DIMENSIONS AND COORDINATES ARE TO BACK OF CURB UNLESS OTHERWISE NOTED.
2) SEE WATER LINE NOTES ON SHEET C2.

SCALE : 1" = 40'

Lockwood, Andrews & Newnam, Inc.

STATE OF TEXAS
DAWN ANN GREEN
79721
LICENSED PROFESSIONAL ENGINEER

Dawn A Green
9-30-04

City of Kerrville
Main Street
Extension
Project

MAIN STREET
WATER DISTRIBUTION SYSTEM
STA. 17+00 TO
STA. 25+00

No.	Date	Revisions	App.

Scale: 1" = 40' Date: Aug. 2004
Designed by: T.C.
Drawn by: M.K.
Checked by: P.J.
Approved by: D.G.
Project No. 2178-20-001

C45

L:\119731\120-02178-005\PROD\5_0_DESIGN-REFERENCE\5_13_DRAWINGS\FP\C41-WATER.DWG

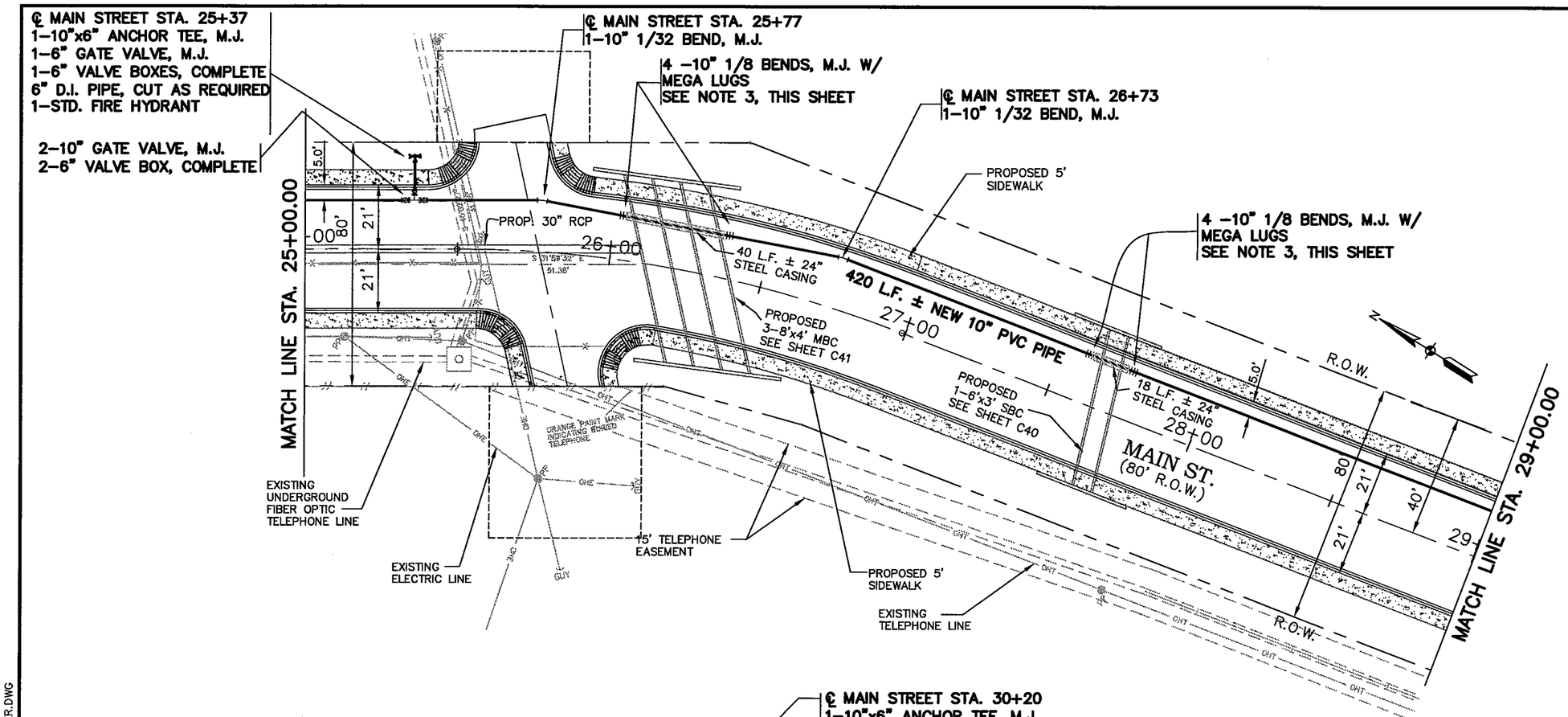

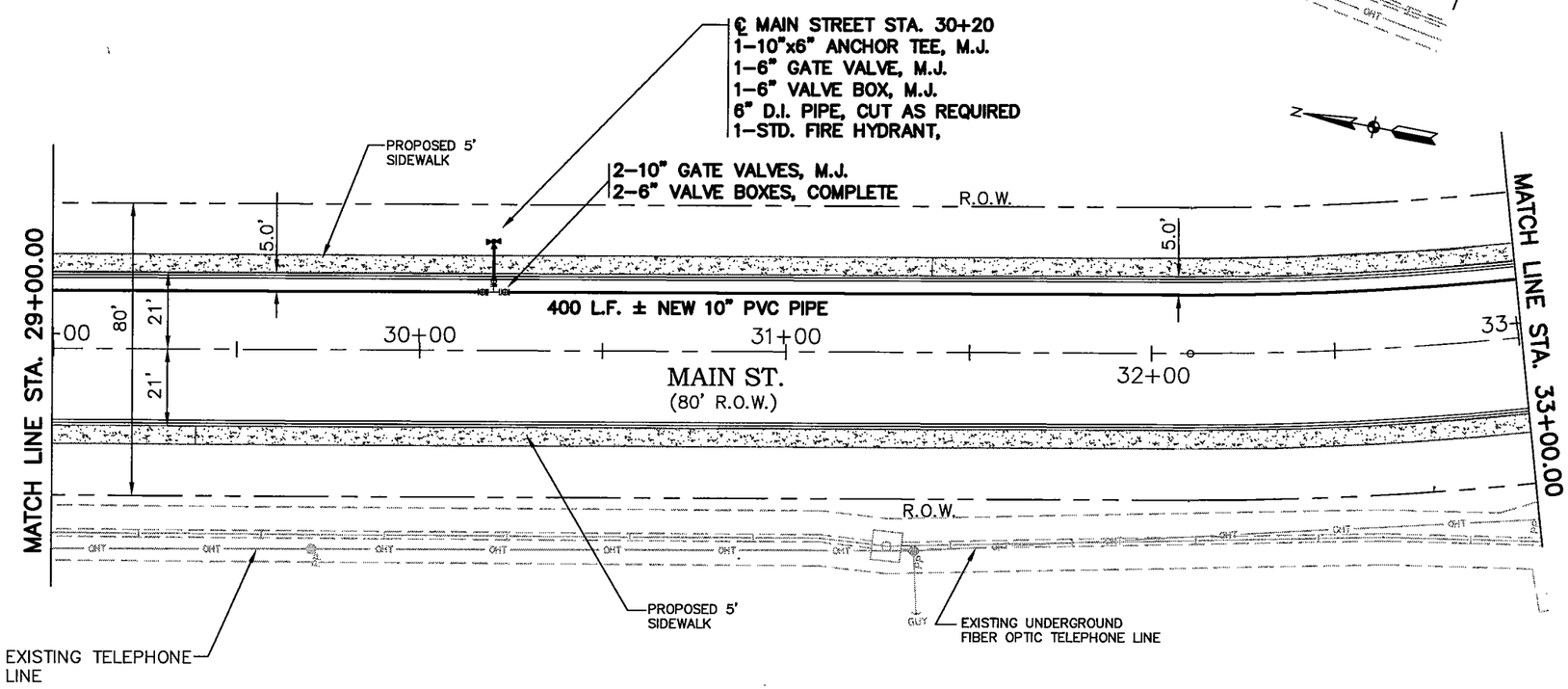

NOTE:
1) ALL DIMENSIONS AND COORDINATES ARE TO BACK OF CURB UNLESS OTHERWISE NOTED.
2) SEE WATER LINE NOTES ON SHEET C2.
3) CONTRACTOR TO INSTALL PROPOSED 10" WATER LINE IN 24" STEEL PIPE CASING UNDER PROPOSED CULVERT. CONTRACTOR MUST MAINTAIN MIN. 2' SEPARATION BETWEEN TOP OF PROPOSED CASING PIPE AND BOTTOM OF PROPOSED CULVERT. FOR DETAIL SEE SHEET C59.
4.) FOR STEEL PIPE CASING DETAIL, SEE SHEET C62.

SCALE : 1" = 40'

Lockwood, Andrews & Newnam, Inc.

STATE OF TEXAS
DAWN ANN GREEN
79721
LICENSED
PROFESSIONAL ENGINEER

Dawn Green
9-30-04

City of Kerrville
Main Street
Extension
Project

MAIN STREET
WATER DISTRIBUTION SYSTEM
STA. 29+00 TO
STA. 33+00

No.	Date	Revisions	App.

Scale: 1" = 40' Date: Aug. 2004
Designed by: T.C.
Drawn by: M.K.
Checked by: P.J.
Approved by: D.G.
Project No. 2178-20-001

C46

L:\119731\120-02178-005\PROD\5_0_DESIGN-REFERENCE\5_13_DRAWINGS\FP\C42-WATER.DWG

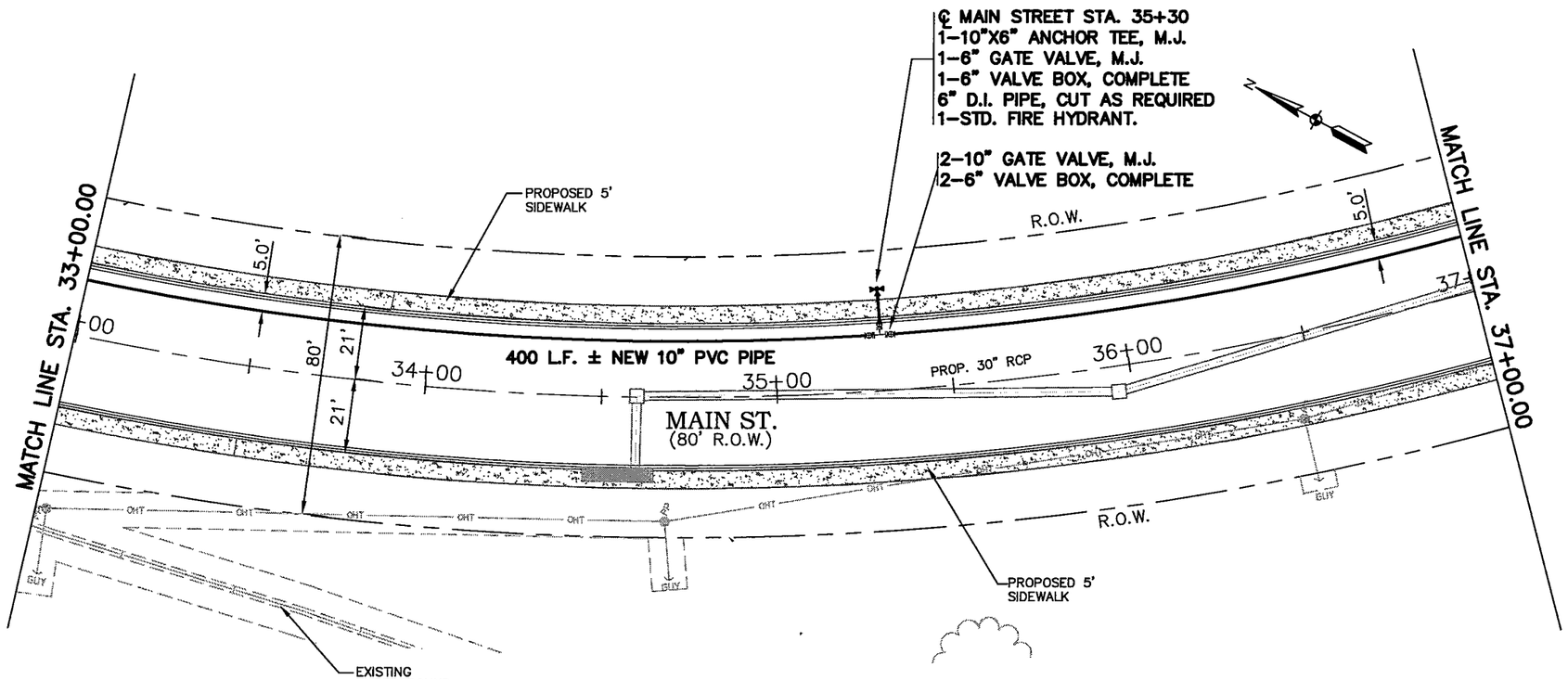

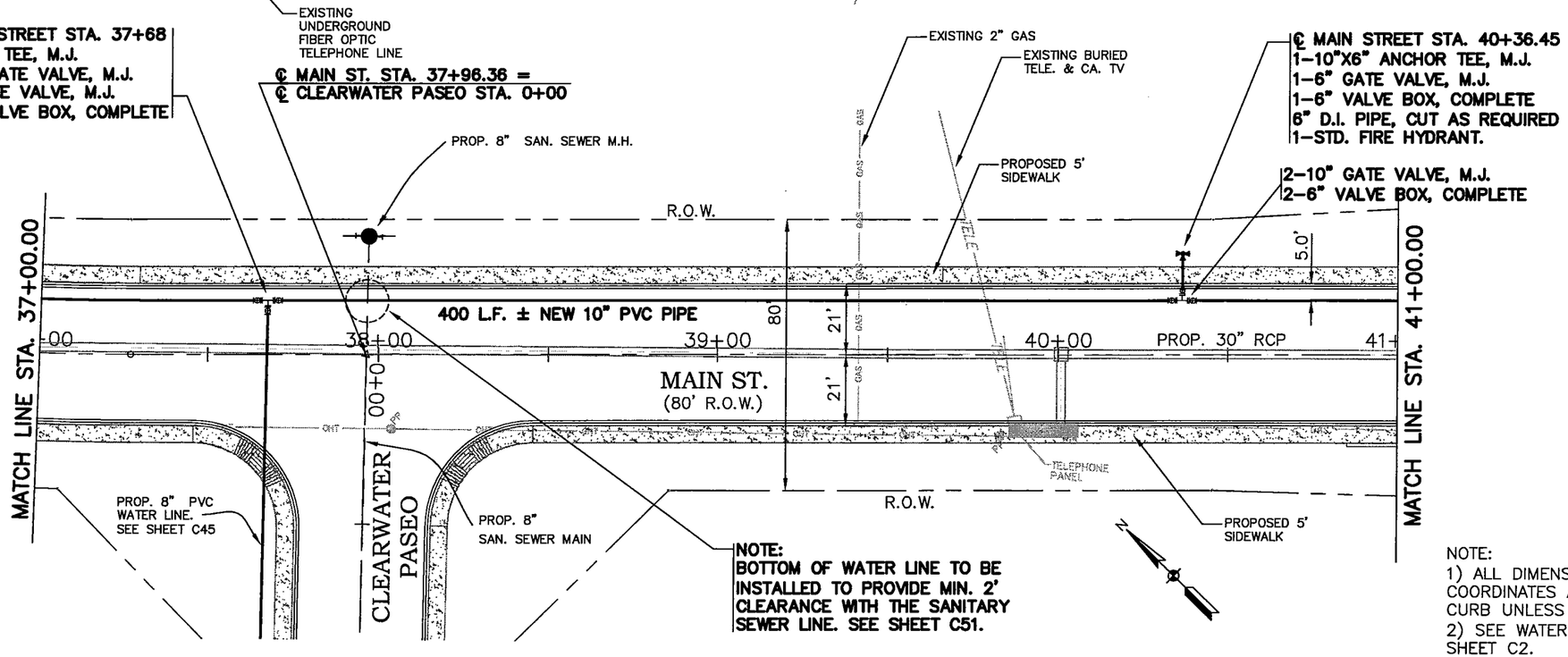

NOTE:
1) ALL DIMENSIONS AND COORDINATES ARE TO BACK OF CURB UNLESS OTHERWISE NOTED.
2) SEE WATER LINE NOTES ON SHEET C2.

SCALE : 1" = 40'

Lockwood, Andrews & Newnam, Inc.

STATE OF TEXAS
DAWN ANN GREEN
79721
LICENSED
PROFESSIONAL ENGINEER

Dawn Green
9-30-04

City of Kerrville
Main Street
Extension
Project

MAIN STREET
WATER DISTRIBUTION SYSTEM
STA. 33+00 TO
STA. 41+00

No.	Date	Revisions	App.

Scale 1" = 40' Date: Aug. 2004
Designed by T.C.
Drawn by M.K.
Checked by P.J.
Approved by D.G.
Project No. 2178-20-001

C47

L:\119731\120-02178-005\PROD\5_0_DESIGN-REFERENCE\5_13_DRAWINGS\FP\C43-WATER.DWG

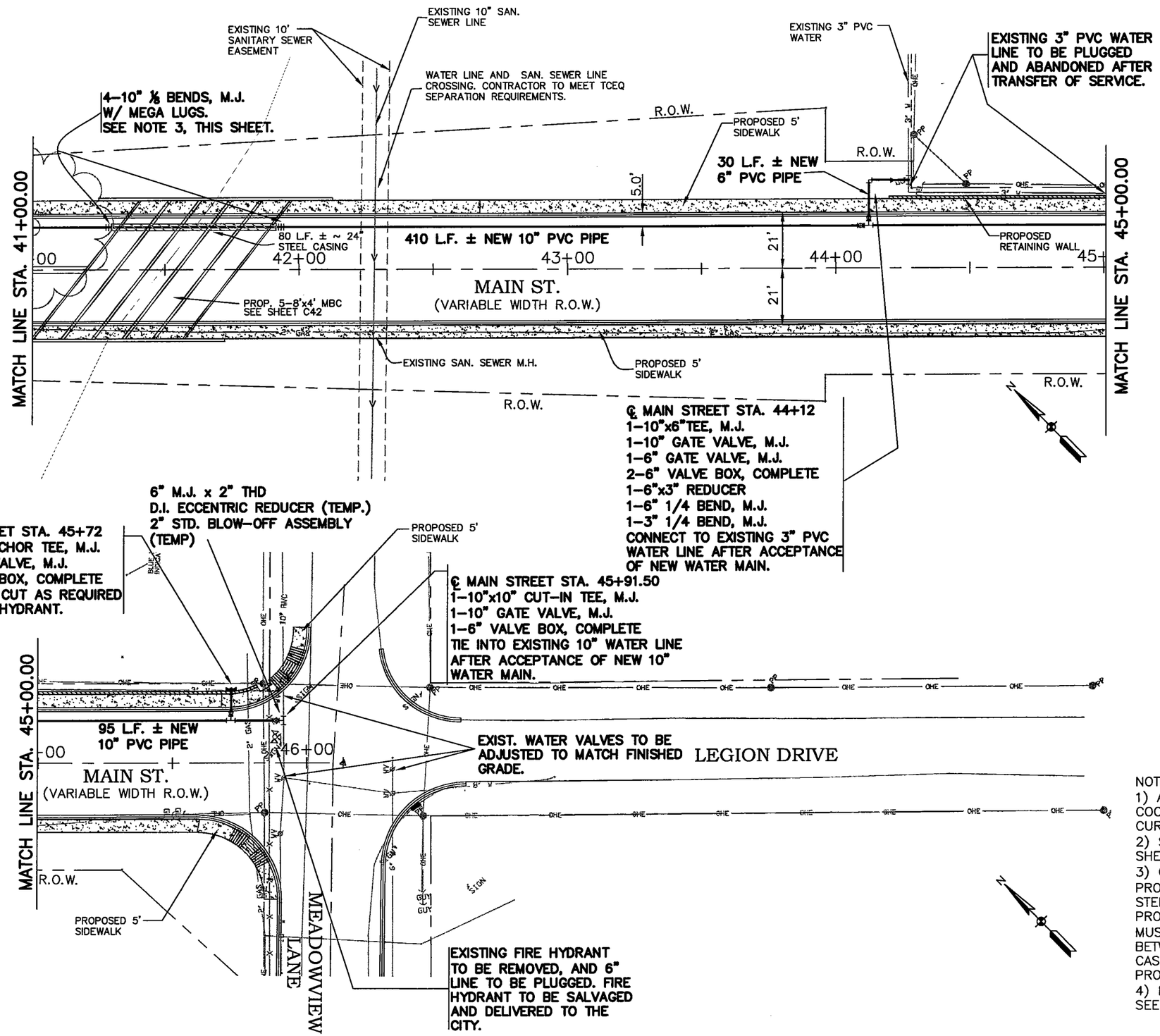

NOTE:
1) ALL DIMENSIONS AND COORDINATES ARE TO BACK OF CURB UNLESS OTHERWISE NOTED.
2) SEE WATER LINE NOTES ON SHEET C2.
3) CONTRACTOR TO INSTALL PROPOSED 10" WATER IN 24" STEEL PIPE CASING LINE UNDER PROPOSED CULVERT. CONTRACTOR MUST MAINTAIN MIN. 2' SEPARATION BETWEEN TOP OF PROPOSED CASING PIPE AND BOTTOM OF PROPOSED CULVERT.
4) FOR STEEL PIPE CASING DETAIL, SEE SHEET C62.

SCALE : 1" = 40'

Lockwood, Andrews & Newnam, Inc.

STATE OF TEXAS — JOHN W. GREEN — 79721 — LICENSED PROFESSIONAL ENGINEER

9-30-04

City of Kerrville
Main Street
Extension
Project

MAIN STREET
WATER DISTRIBUTION SYSTEM
STA. 41+00 TO END

No.	Date	Revisions	App.

Scale 1" = 40' Date: Aug. 2004
Designed by T.C.
Drawn by M.K.
Checked by P.J.
Approved by D.G.
Project No. 2178-20-001

C48

L:\119731\120-02178-005\PROD\5_0_DESIGN-REFERENCE\5_13_DRAWINGS\FP\C44-WATER.DWG

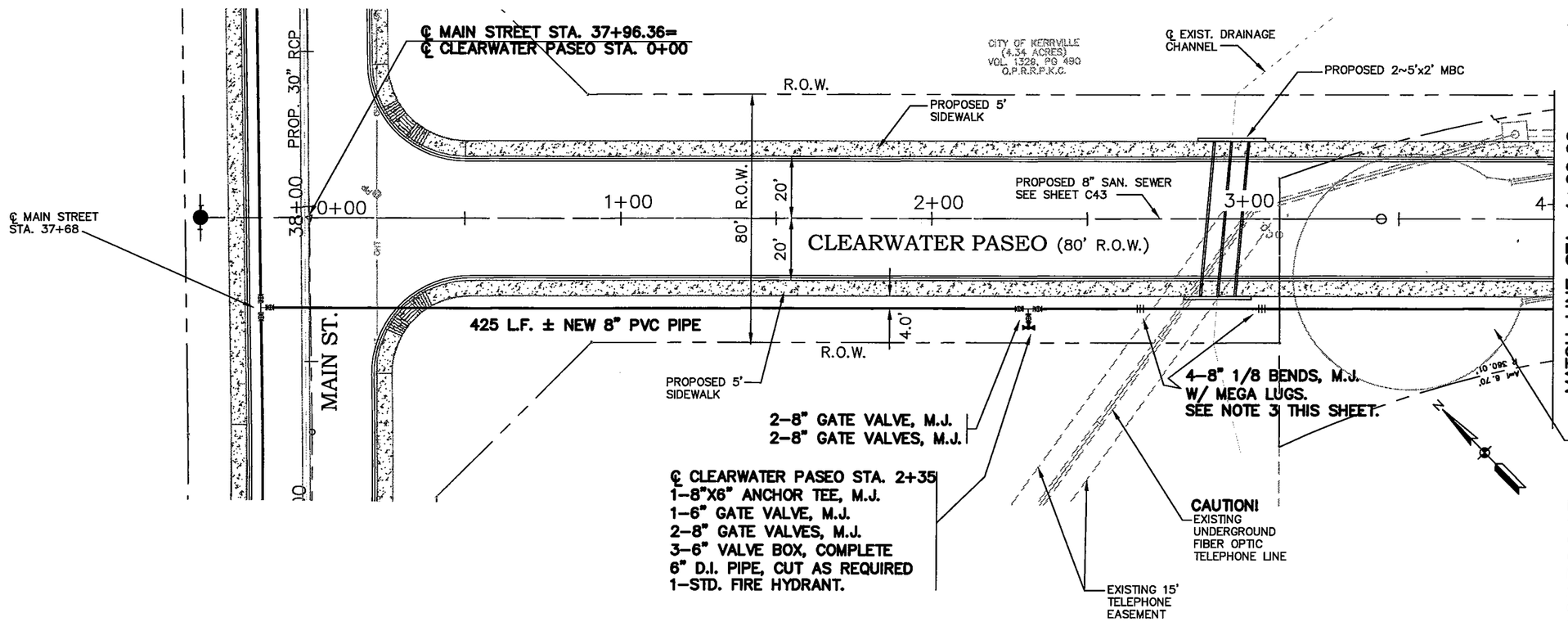

NOTES:

1) ALL DIMENSIONS AND COORDINATES ARE TO BACK OF CURB UNLESS OTHERWISE NOTED.
2) SEE WATER LINE NOTES ON SHEET C2.
3) CONTRACTOR TO INSTALL PROPOSED 8" WATER LINE UNDER EXISTING FIBER OPTIC TELE. CONDUIT & DRAINAGE STRUCTURE. CONTRACTOR MUST MAINTAIN MIN. 2' SEPARATION BETWEEN TOP OF PROPOSED WATER MAIN AND BOTTOM OF EXISTING TELE. CONDUIT.
4) FOR STEEL PIPE CASING DETAIL, SEE SHEET C62.

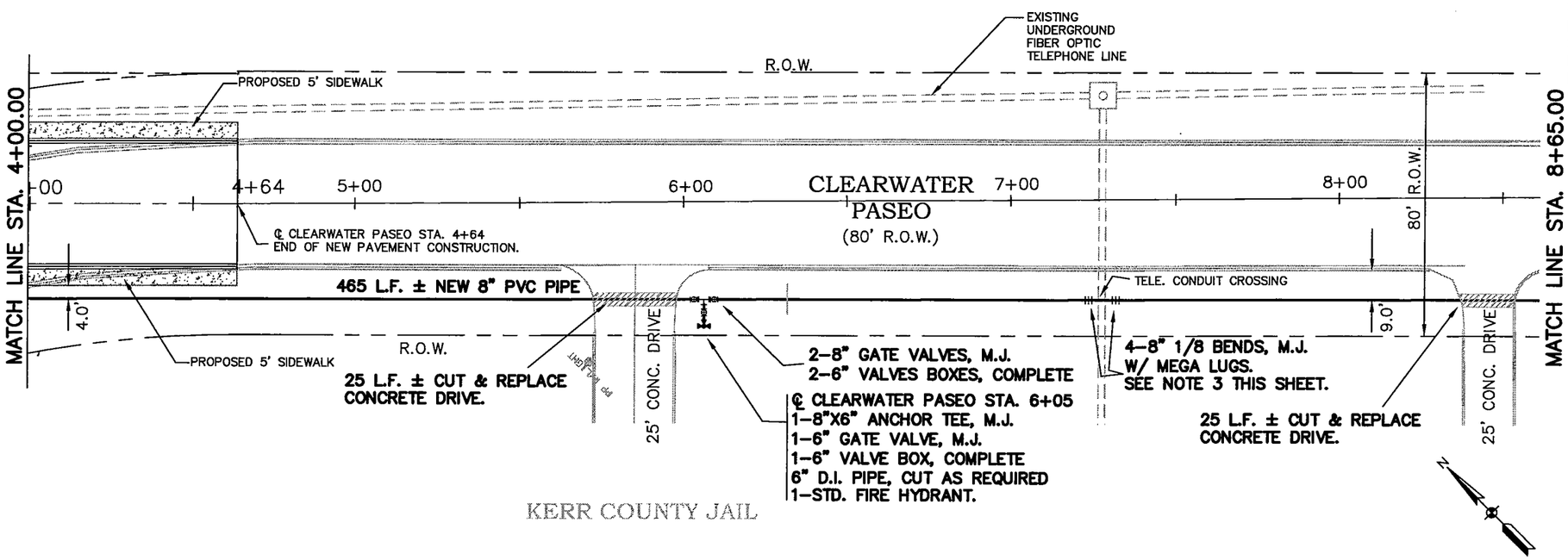

SCALE : 1" = 40'

Lockwood, Andrews & Newnam, Inc.

STATE OF TEXAS
DAWN ANN GREEN
79721
LICENSED
PROFESSIONAL ENGINEER

Dawn Green
9-30-04

City of Kerrville
Main Street
Extension
Project

CLEARWATER PASEO DRIVE
WATER DISTRIBUTION SYSTEM
STA. 0-16 TO 8+65

No.	Date	Revisions	App.

Scale - Date: Aug. 2004
Designed by: T.C.
Drawn by: M.K.
Checked by: P.J.
Approved by: D.G.
Project No. 2178-20-001

C49

L:\119731\120-02178-005\PROD\5_0_DESIGN-REFERENCE\5_13_DRAWINGS\FP\C45-WATER.DWG

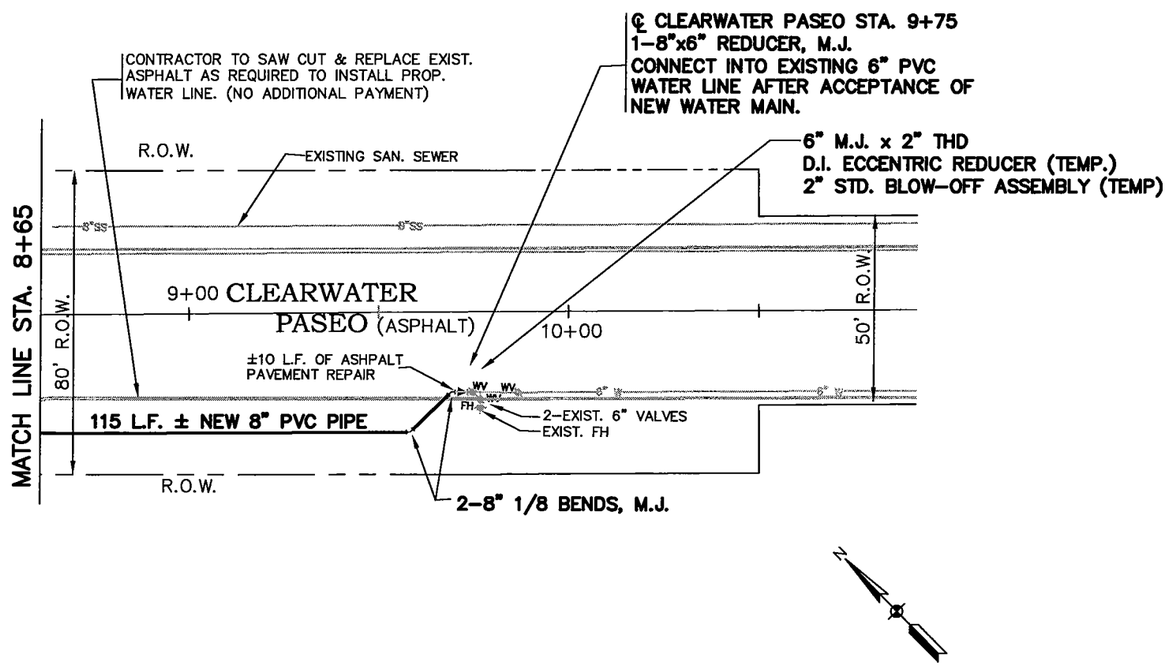

NOTE:
1) ALL DIMENSIONS AND COORDINATES ARE TO BACK OF CURB UNLESS OTHERWISE NOTED.
2) SEE WATER LINE NOTES ON SHEET C2.

SCALE : 1" = 40'

Lockwood, Andrews & Newnam, Inc.

STATE OF TEXAS
DAWN ANN GREEN
79721
LICENSED
PROFESSIONAL ENGINEER

Dawn A Green
9-30-04

City of Kerrville
Main Street
Extension
Project

CLEARWATER PASEO DRIVE
WATER DISTRIBUTION SYSTEM
STA. 8+65 TO STA. 9+75

No.	Date	Revisions	App.

Scale - Date: Aug. 2004
Designed by: T.C.
Drawn by: M.K.
Checked by: P.J.
Approved by: D.G.
Project No. 2178-20-001

C50

L:\119731\120-02178-005\PROD\5_0_DESIGN-REFERENCE\5_13_DRAWINGS\FINAL PLANS\C40-C46-WATER\C46-WATER.DWG\FP\C46-WATER.DWG

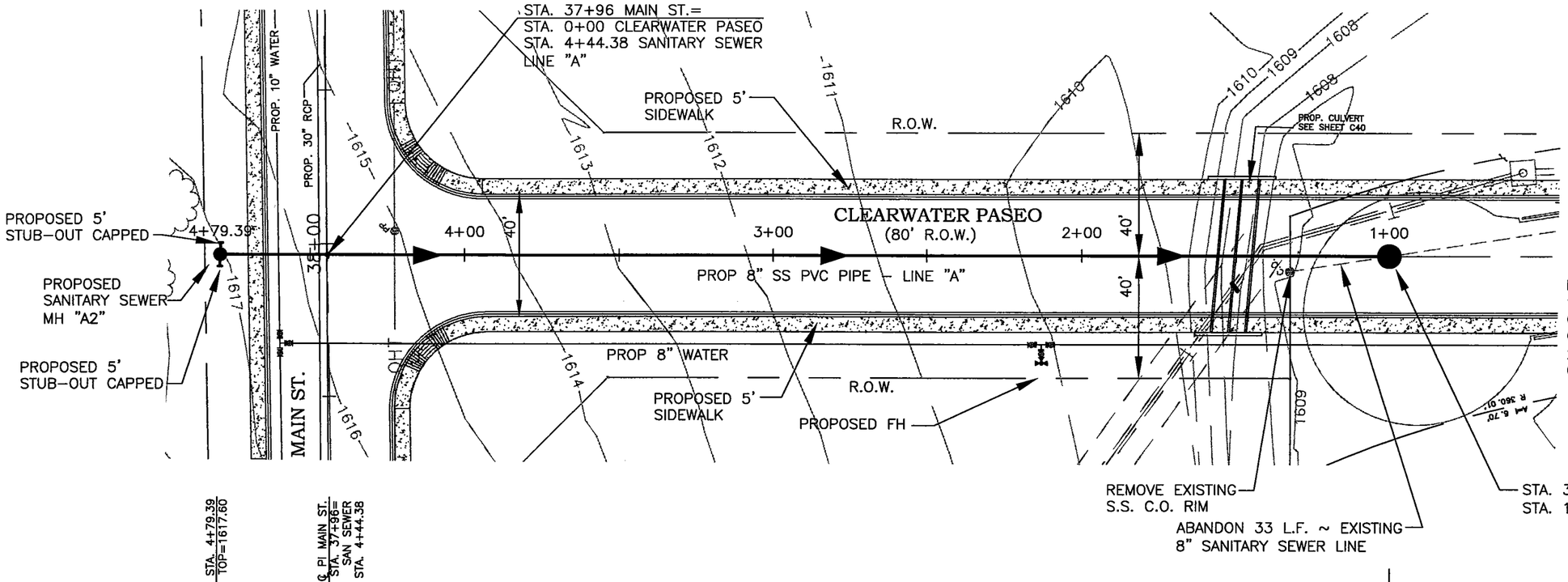

SCALE : 1" = 40' HORZ.
1" = 4' VERT.

NOTE:
1) ALL DIMENSIONS AND COORDINATES ARE TO BACK OF CURB UNLESS OTHERWISE NOTED.
2) SEE WATER PLANS FOR DETAILS OF WATER LINE.

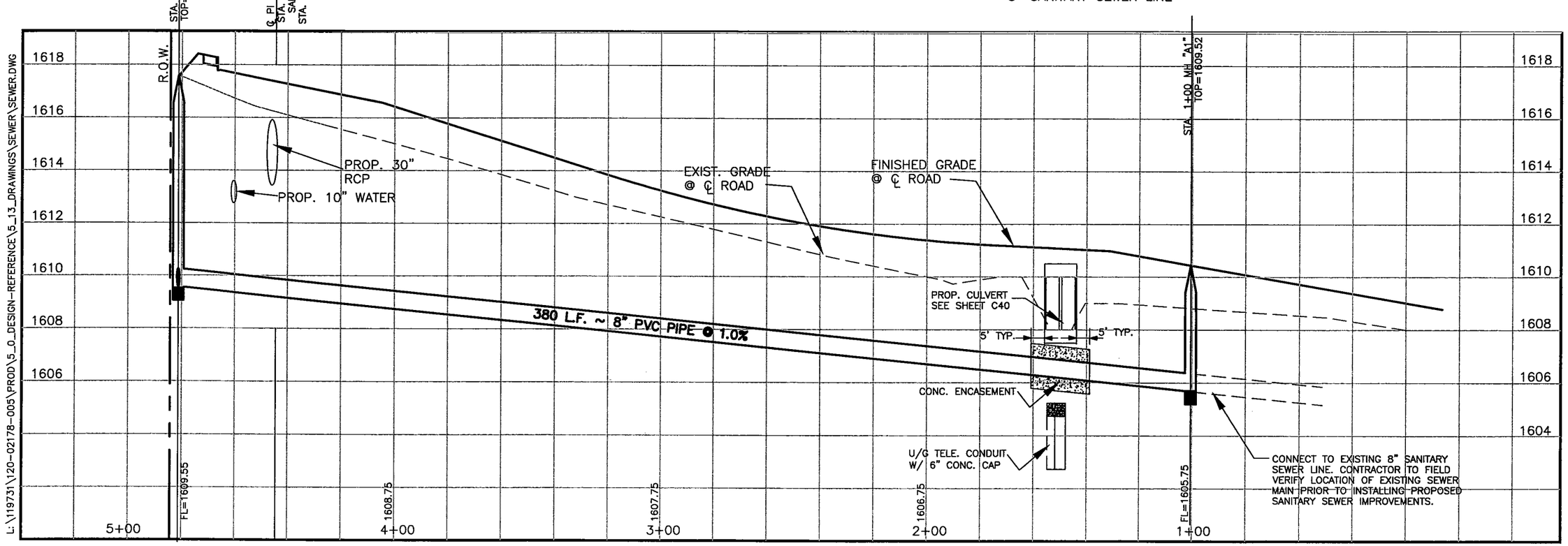

L:\119731\120-02178-005\PROD\5_0_DESIGN-REFERENCE\5_13_DRAWINGS\SEWER\SEWER.DWG

Lockwood, Andrews & Newnam, Inc.

STATE OF TEXAS
DAN WM GREEN
79721
LICENSED PROFESSIONAL ENGINEER

9-30-04

City of Kerrville
Main Street
Extension
Project

CLEARWATER PASEO
SEWER PLAN & PROFILE
STA. 0+00 TO
STA. 4+00

No.	Date	Revisions	App.

Scale: Date:
Designed by: T.C.
Drawn by: M.K.
Checked by: P.J.
Approved by: D.G.
Project No. 2178-20-001

C51

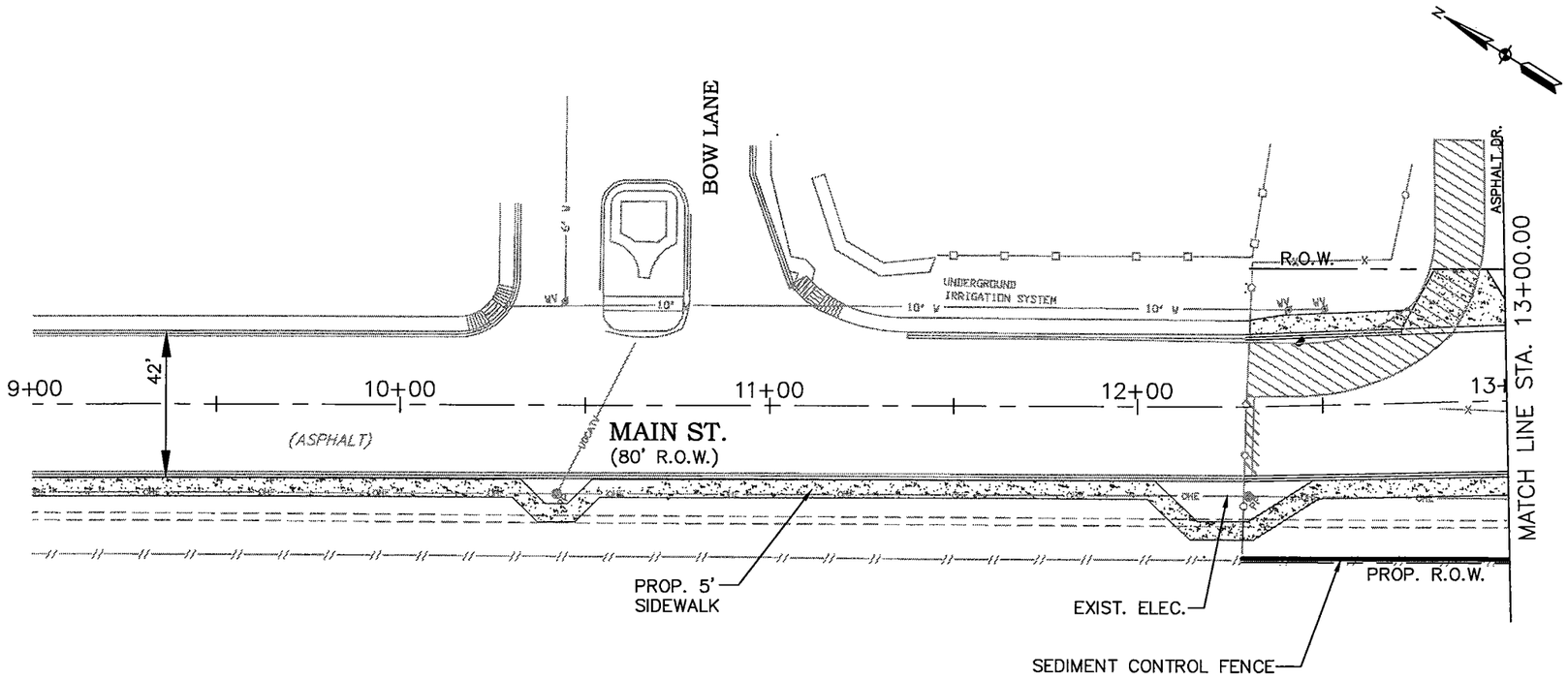

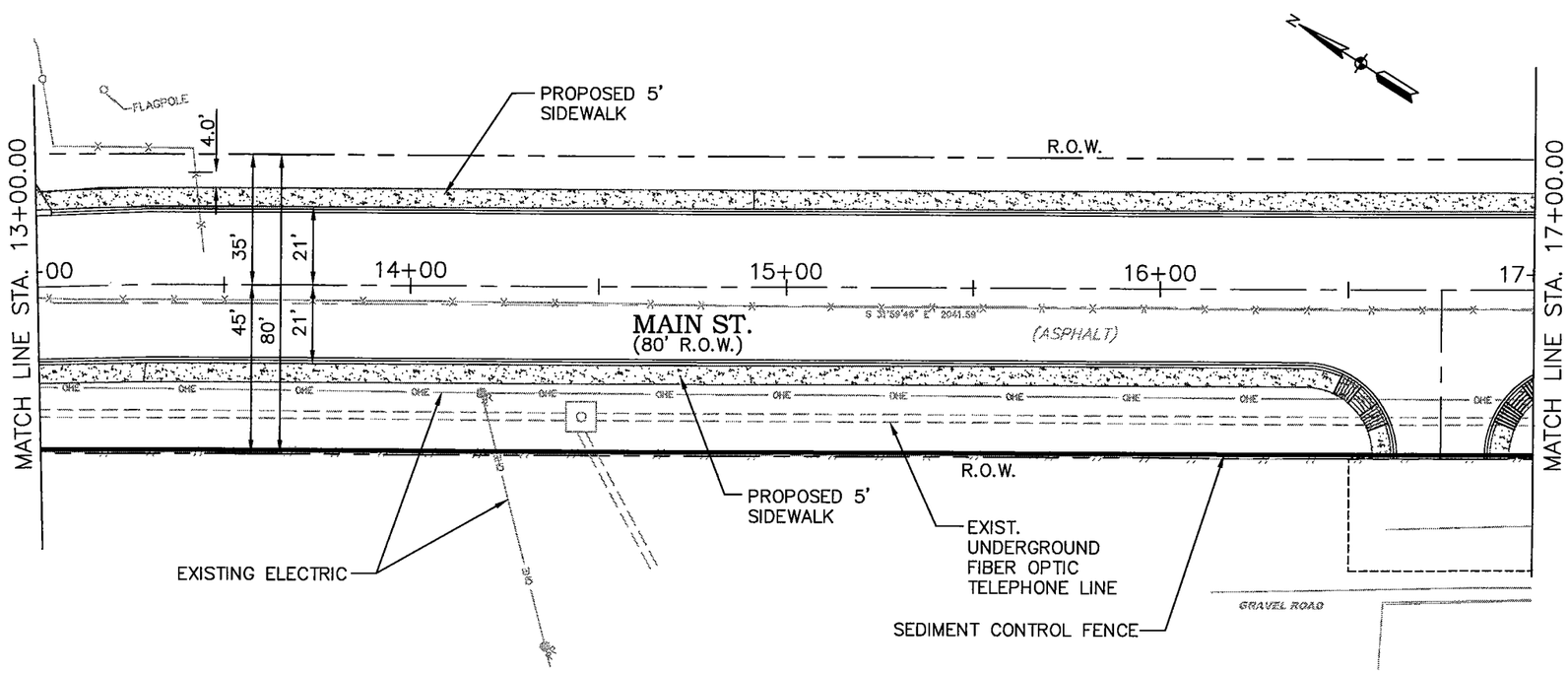

NOTE:
1) ALL DIMENSIONS AND COORDINATES ARE TO BACK OF CURB UNLESS OTHERWISE NOTED.

SCALE : 1" = 40'

Lockwood, Andrews & Newnam, Inc.

STATE OF TEXAS
DAWN ANN GREEN
79721
LICENSED
PROFESSIONAL ENGINEER

9-30-04

City of Kerrville
Main Street
Extension
Project

MAIN STREET
STORM WATER POLLUTION
PREVENTION PLAN
STA. 9+00 TO
STA. 17+00

No.	Date	Revisions	App.

Scale: 1" = 40' Date: Aug. 2004
Designed by: M.G.
Drawn by: M.K.
Checked by: P.J.
Approved by: D.G.
Project No. 2178-20-001

C52

L:\119731\120-02178-005\PROD\5_0_DESIGN-REFERENCE\5_13_DRAWINGS\WTR.DWG

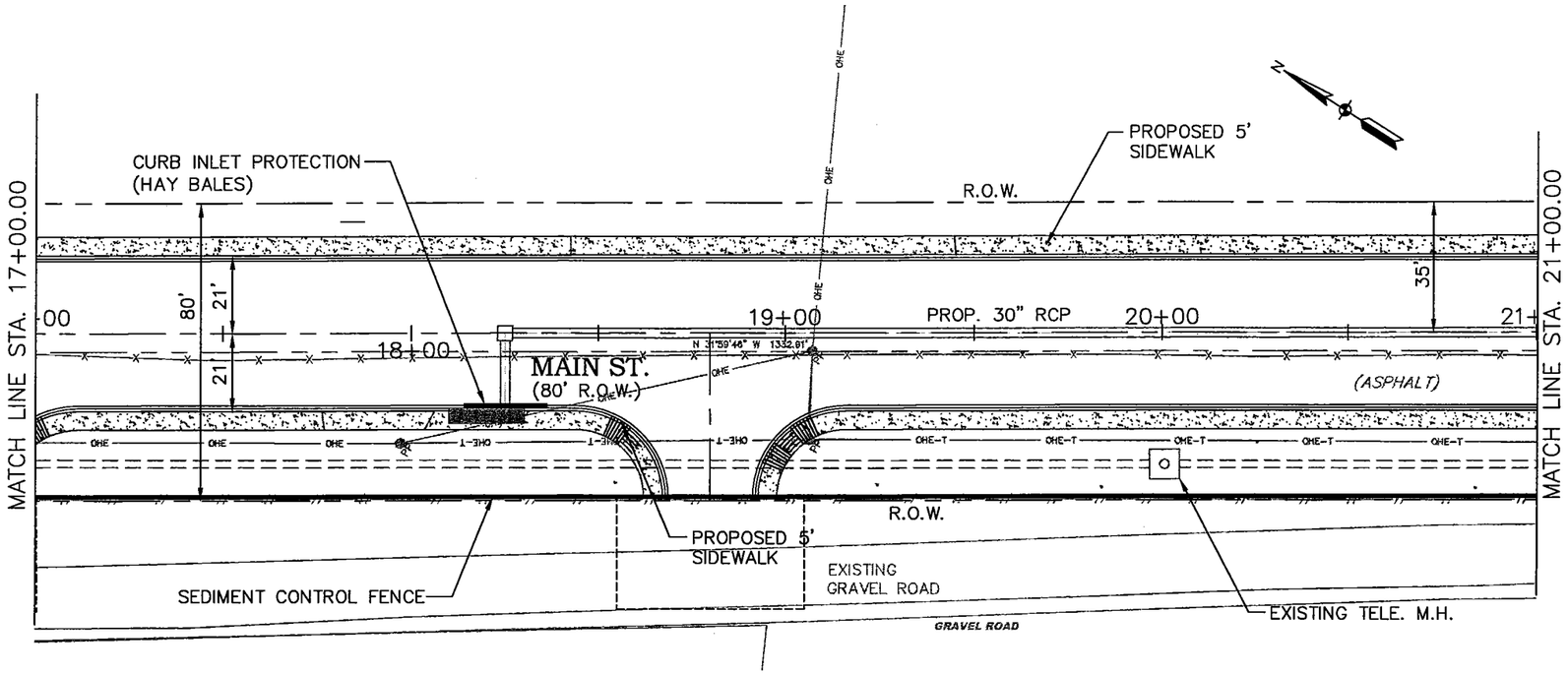

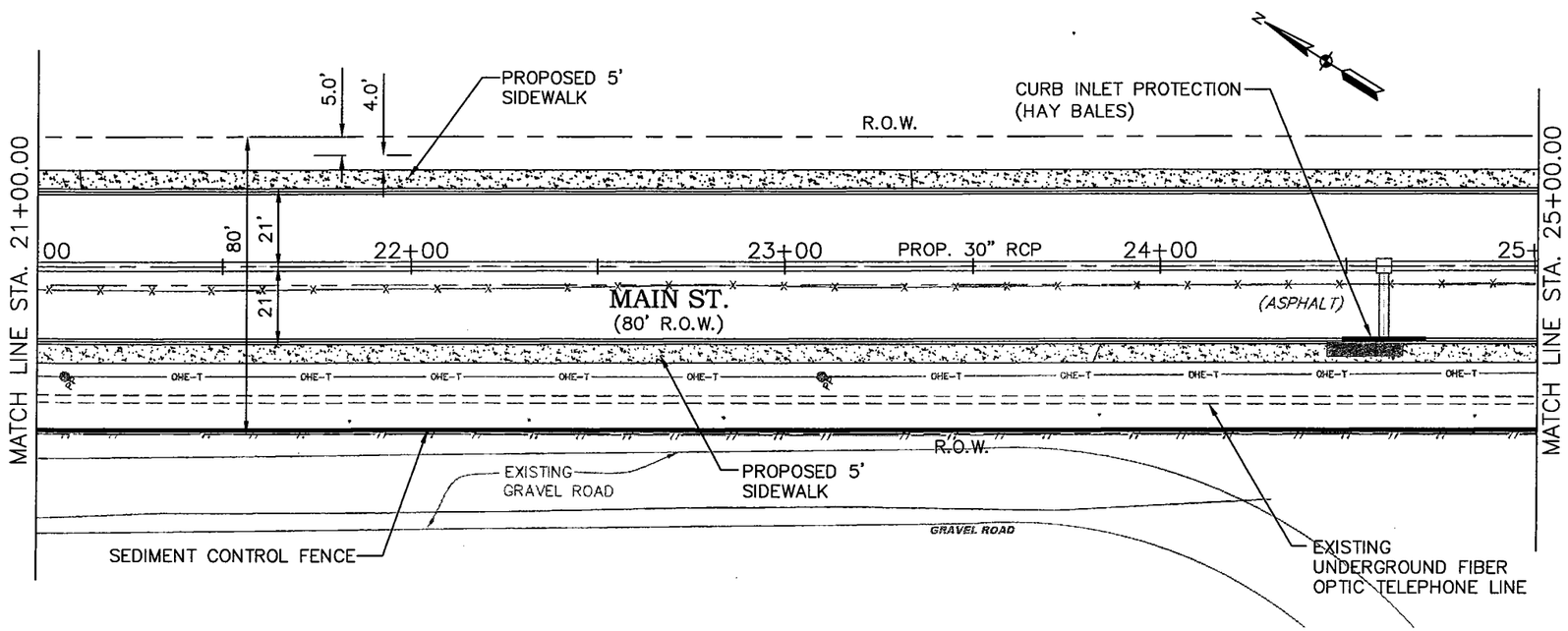

NOTE:
1) ALL DIMENSIONS AND COORDINATES ARE TO BACK OF CURB UNLESS OTHERWISE NOTED.

SCALE : 1" = 40'

L:\119731\120-02178-005\PROD\5_0_DESIGN-REFERENCE\5_13_DRAWINGS\C05.DWG

Lockwood, Andrews & Newnam, Inc.

STATE OF TEXAS
JOHN ANN GREEN
79721
LICENSED
PROFESSIONAL ENGINEER

City of Kerrville
Main Street
Extension
Project

MAIN STREET
STORM WATER POLLUTION
PREVENTION PLAN
STA. 17+00 TO
STA. 25+00

No.	Date	Revisions	App.

Scale: 1" = 40' Date: Aug. 2004
Designed by: R.G.
Drawn by: M.K.
Checked by: P.J.
Approved by: D.G.
Project No. 2178-20-001

C53

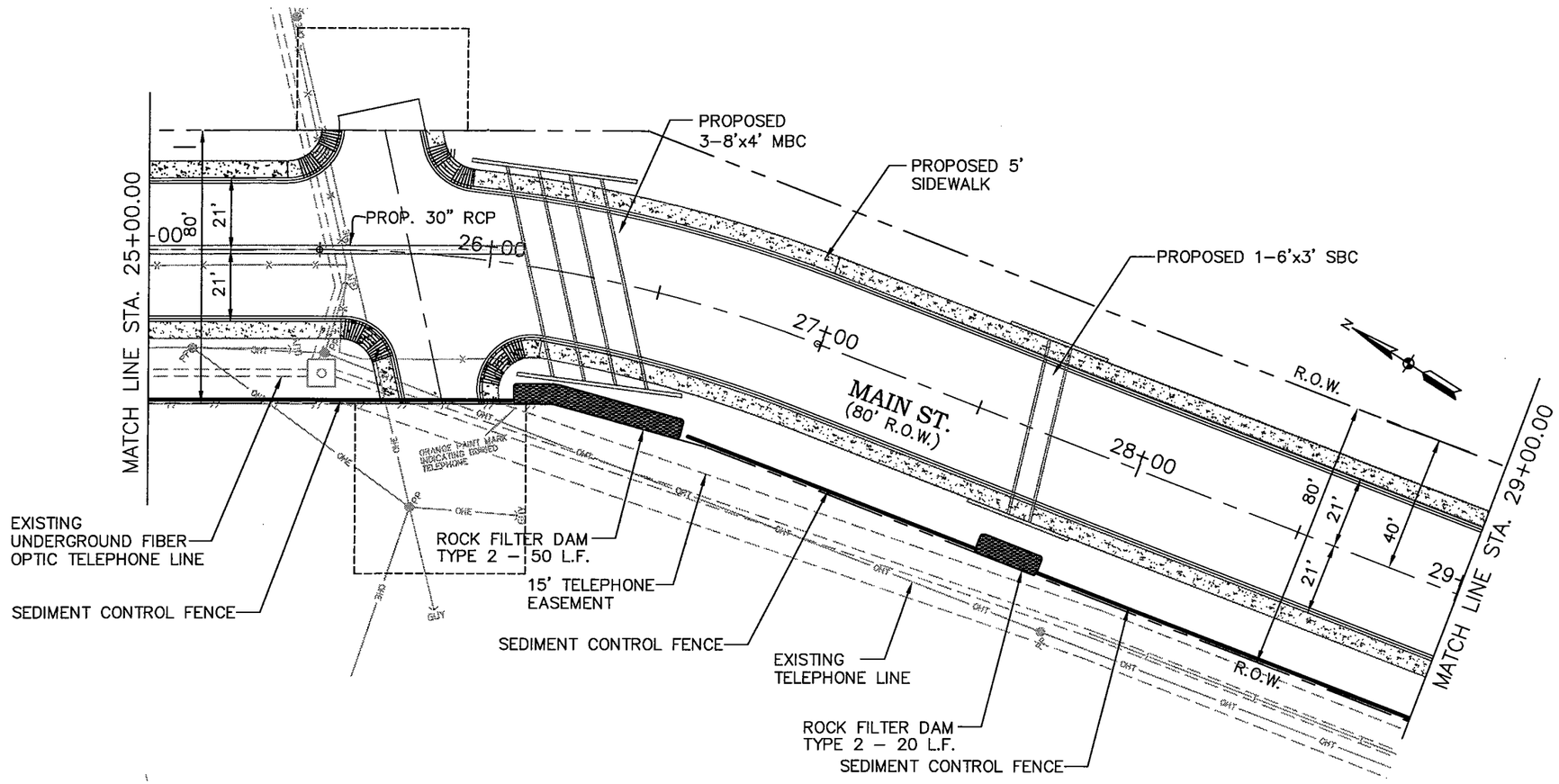

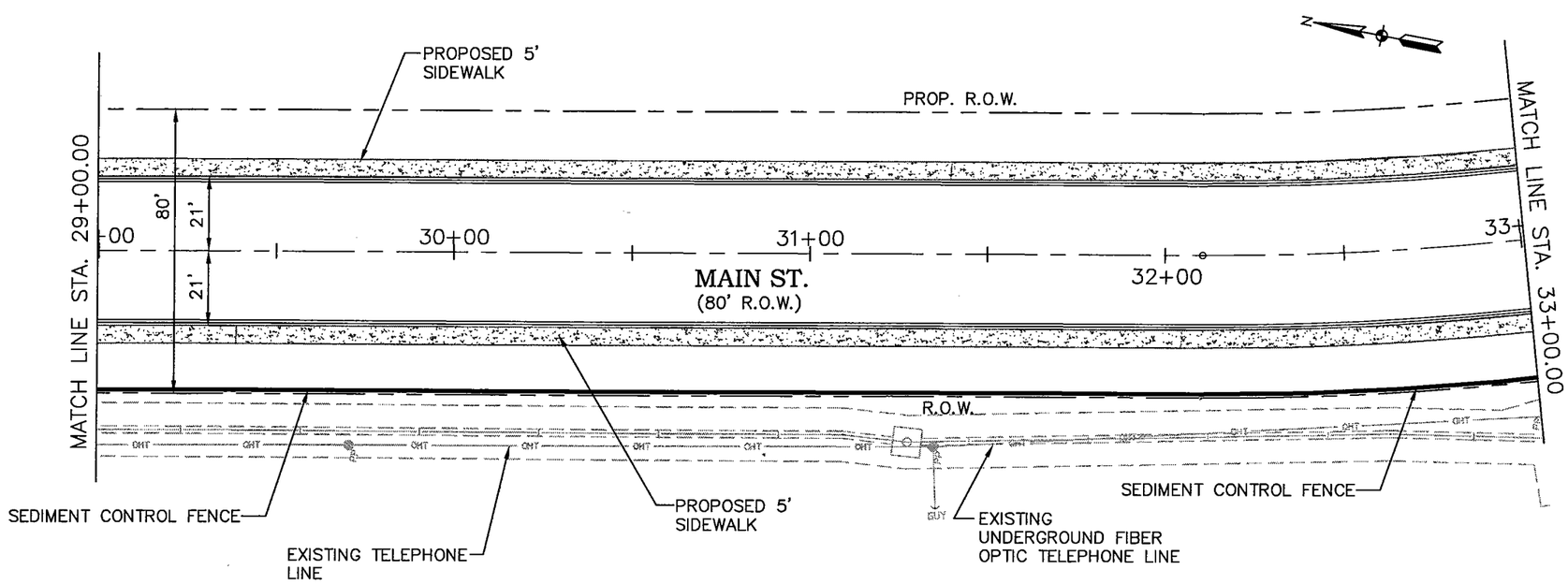

NOTE:
1) ALL DIMENSIONS AND COORDINATES ARE TO BACK OF CURB UNLESS OTHERWISE NOTED.

SCALE : 1" = 40'

L:\119731\120-02178-005\PROD\5_0_DESIGN-REFERENCE\5_13_DRAWINGS\Wtr.DWG

Lockwood, Andrews & Newnam, Inc.

STATE OF TEXAS
DAWN ANN GREEN
79721
LICENSED
PROFESSIONAL ENGINEER

City of Kerrville
Main Street
Extension
Project

MAIN STREET
STORM WATER POLLUTION
PREVENTION PLAN
STA. 29+00 TO
STA. 33+00

No.	Date	Revisions	App.

Scale: 1" = 40' Date: Aug. 2004
Designed by: R.G.
Drawn by: M.K.
Checked by: P.J.
Approved by: D.G.
Project No. 2178-20-001

C54

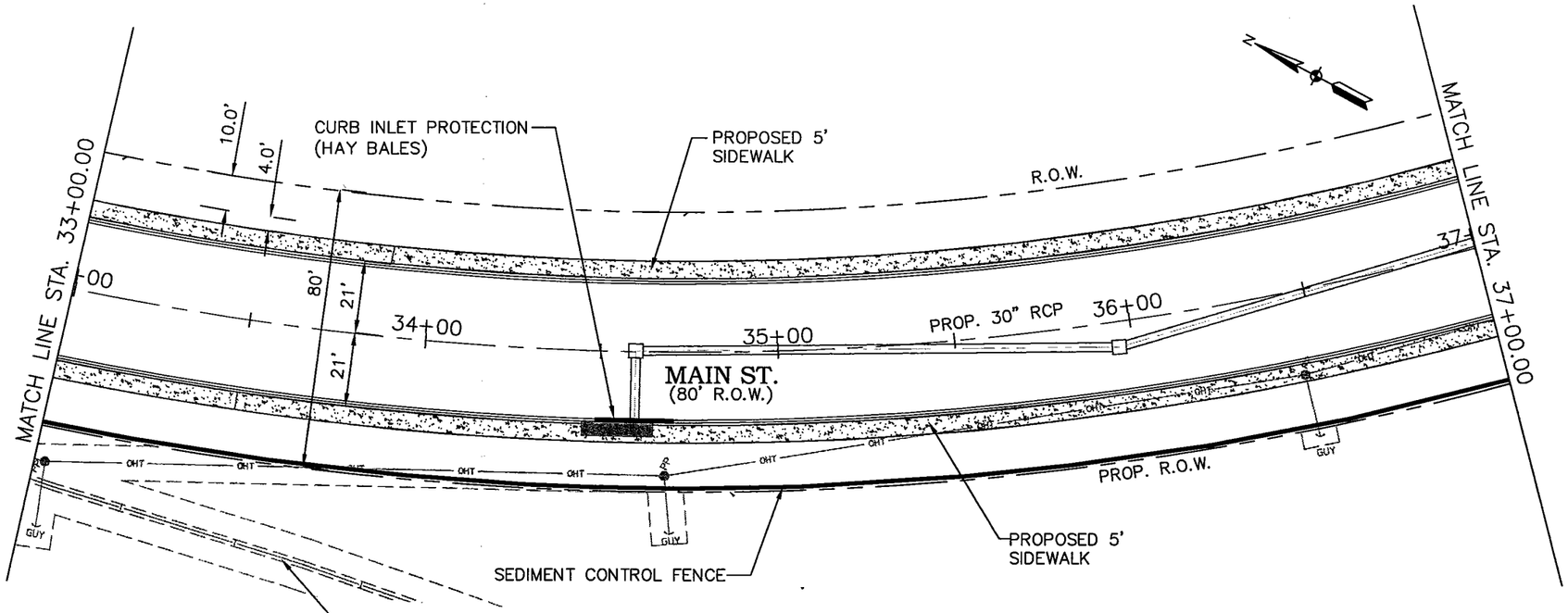

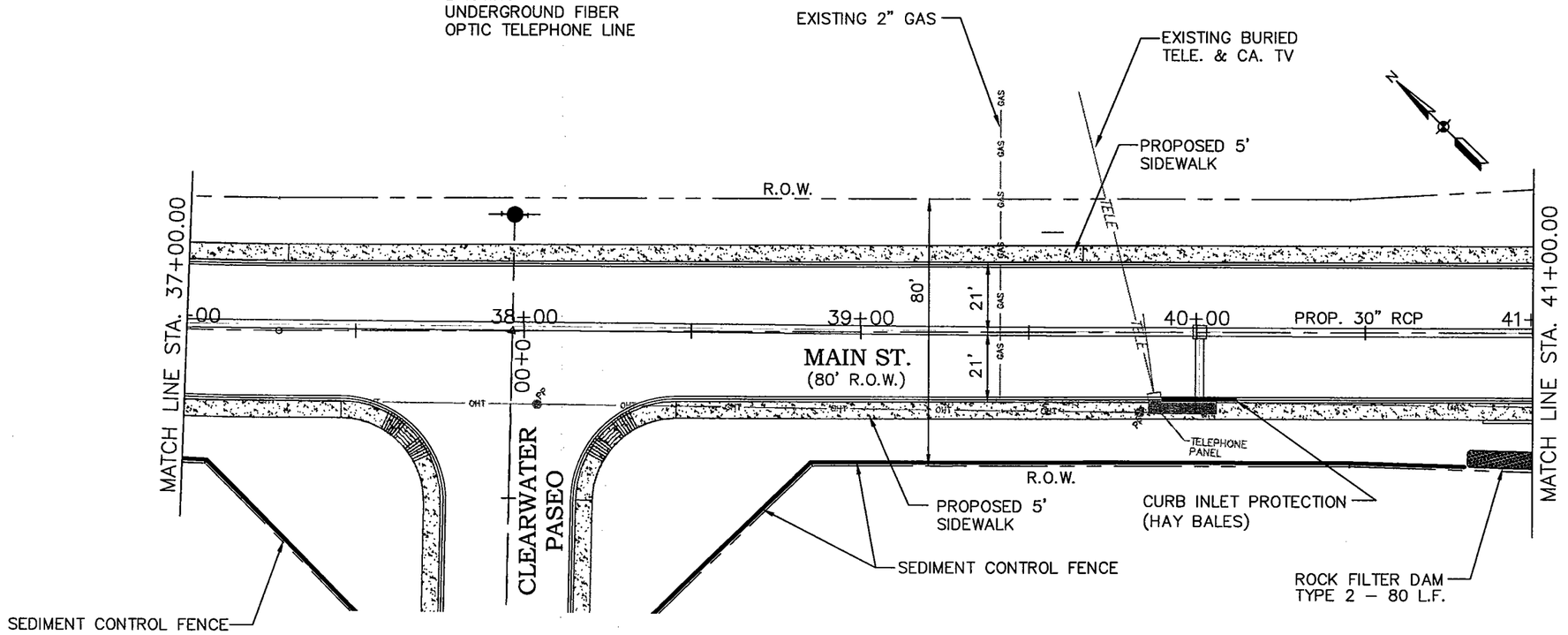

NOTE:
1) ALL DIMENSIONS AND COORDINATES ARE TO BACK OF CURB UNLESS OTHERWISE NOTED.

SCALE : 1" = 40'

Lockwood, Andrews & Newnam, Inc.

STATE OF TEXAS
DAN AN GRON
79721
LICENSED
PROFESSIONAL ENGINEER

9-30-04

City of Kerrville
Main Street
Extension
Project

MAIN STREET
STORM WATER POLLUTION
PREVENTION PLAN
STA. 33+00 TO
STA. 41+00

No.	Date	Revisions	App.

Scale 1" = 40' Date: Aug. 2004
Designed by: R.B.
Drawn by: M.K.
Checked by: P.J.
Approved by: D.G.
Project No. 2178-20-001

C55

L:\119731\120-02178-005\PROD\5_0_DESIGN-REFERENCE\5_13_DRAWINGS\C05.DWG

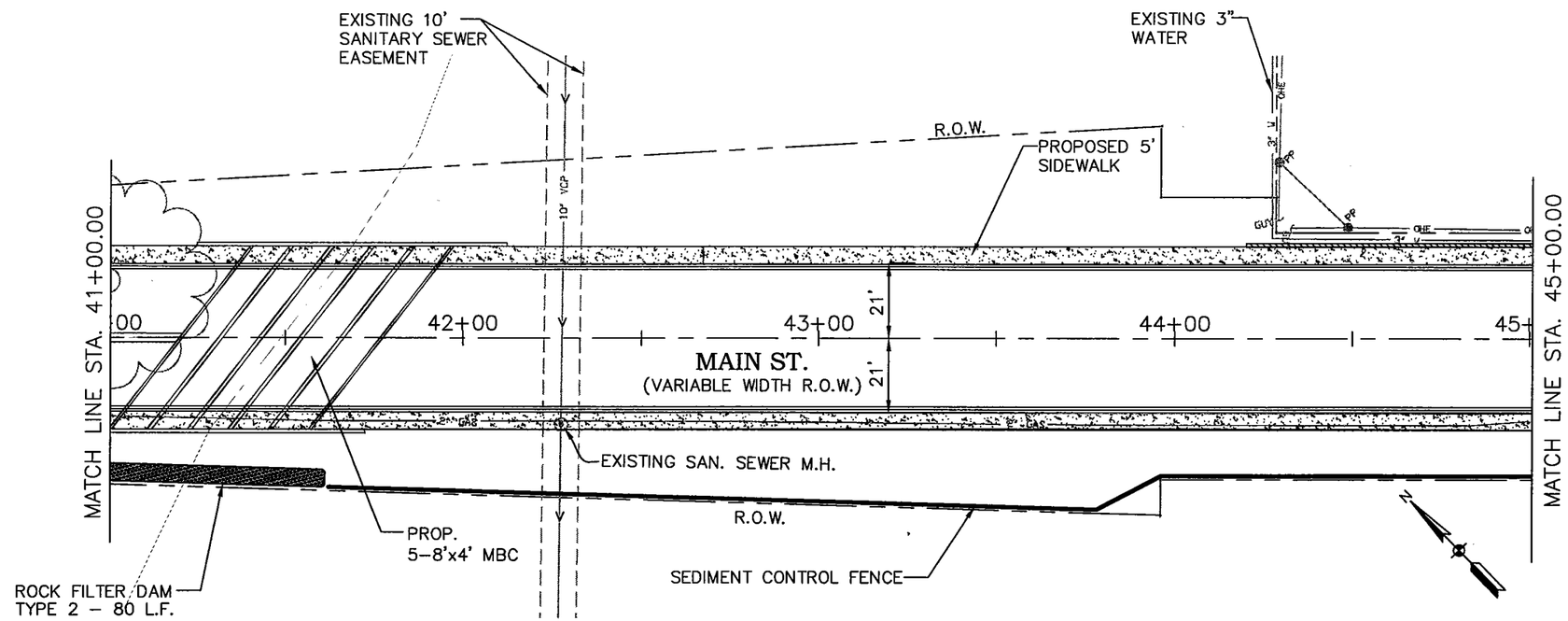

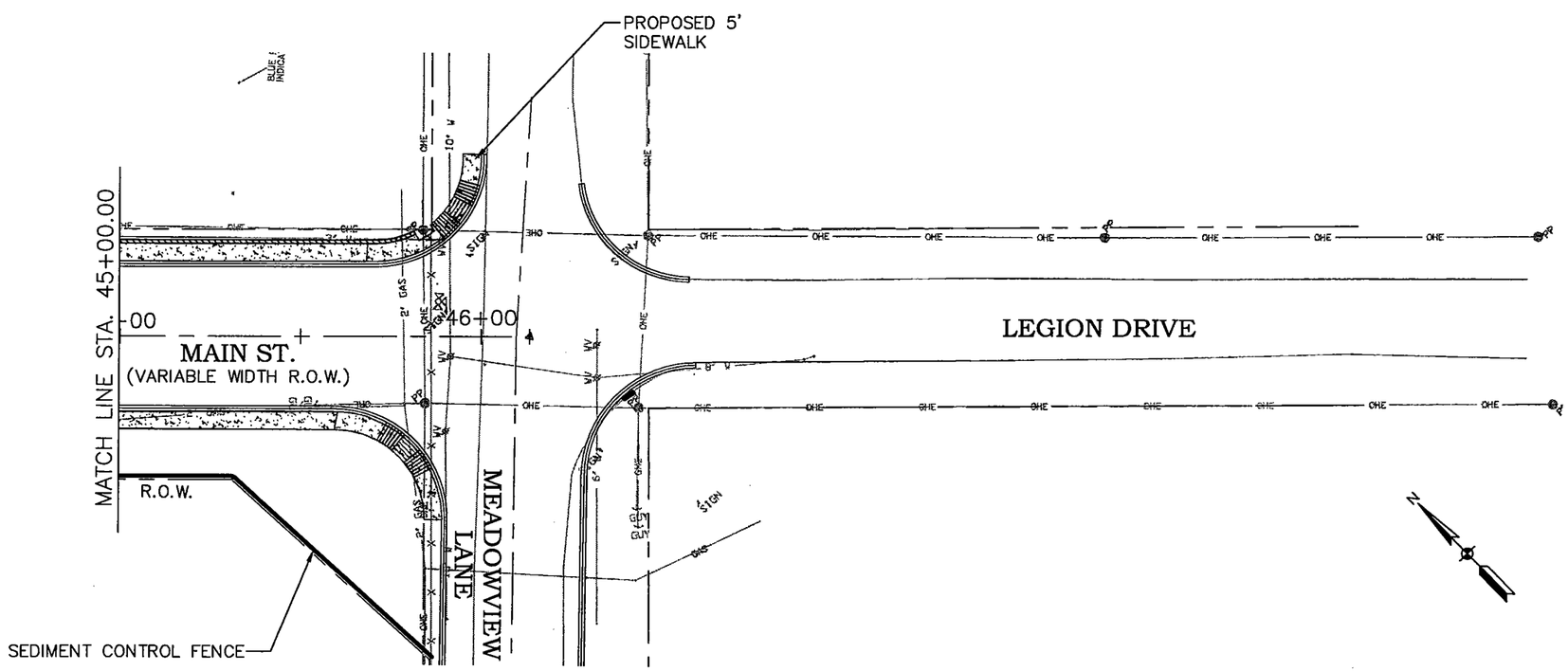

NOTE:
1) ALL DIMENSIONS AND COORDINATES ARE TO BACK OF CURB UNLESS OTHERWISE NOTED.

SCALE : 1" = 40'

Lockwood, Andrews & Newnam, Inc.

STATE OF TEXAS
DAWN ANN GREEN
79721
LICENSED PROFESSIONAL ENGINEER

City of Kerrville
Main Street
Extension
Project

MAIN STREET
STORM WATER POLLUTION
PREVENTION PLAN
STA. 41+00 TO END

No.	Date	Revisions	App.

Scale: 1" = 40' Date: Aug. 2004
Designed by: R.G.
Drawn by: M.K.
Checked by: P.J.
Approved by: D.G.
Project No. 2178-20-001

C56

L:\119731\120-02178-005\PROD\5_0_DESIGN-REFERENCE\5_13_DRAWINGS\C05.DWG

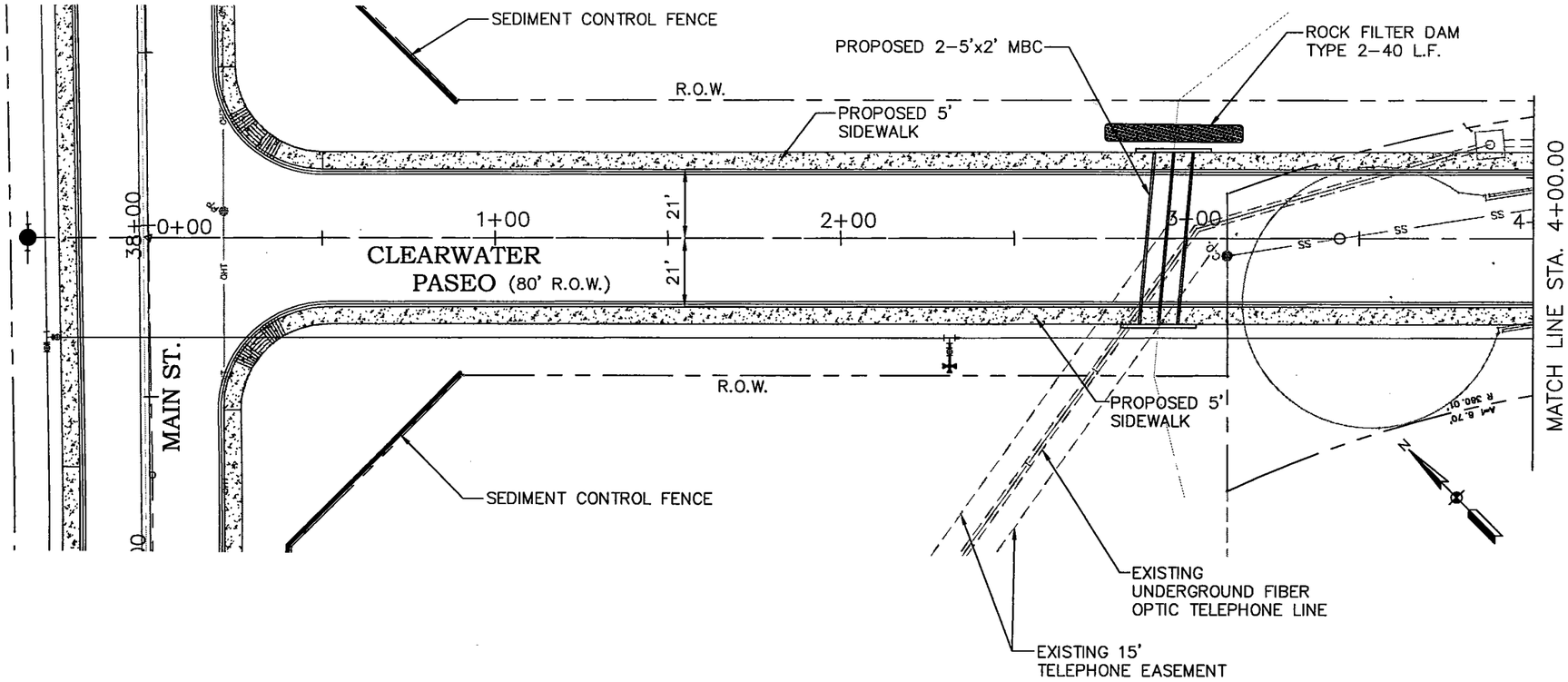

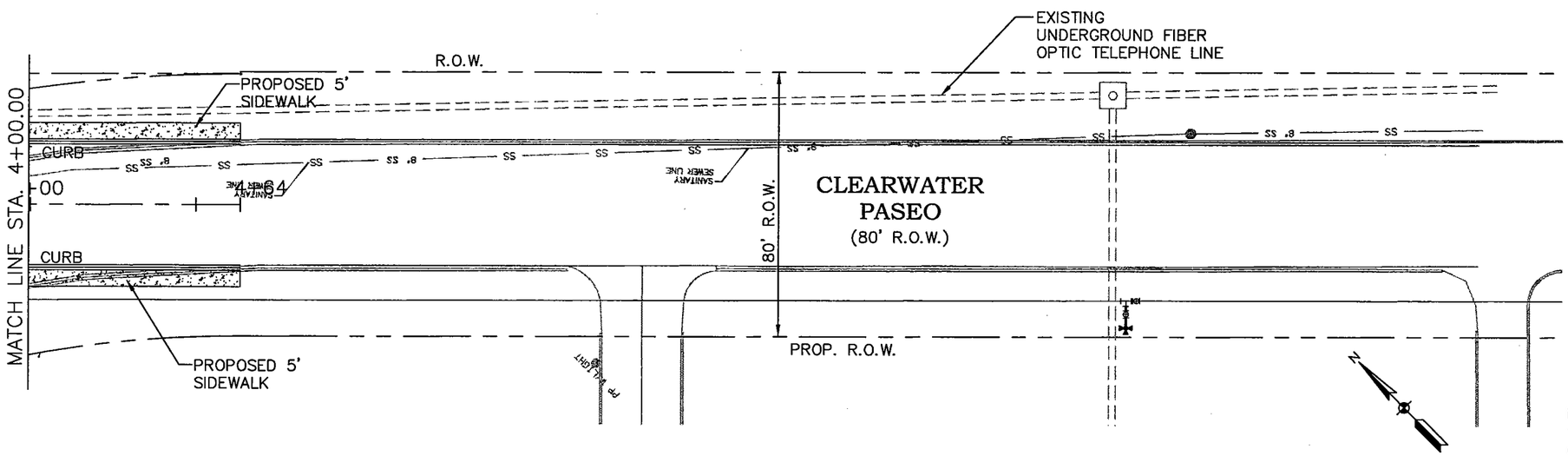

NOTE:
1) ALL DIMENSIONS AND COORDINATES ARE TO BACK OF CURB UNLESS OTHERWISE NOTED.

SCALE : 1" = 40'

Lockwood, Andrews & Newnam, Inc.

STATE OF TEXAS
DAWN ANN GREEN
79721
LICENSED PROFESSIONAL ENGINEER

City of Kerrville
Main Street
Extension
Project

CLEARWATER PASEO DRIVE
STORM WATER POLLUTION
PREVENTION PLAN
STA. 1+00 TO END

No.	Date	Revisions	App.

Scale 1" = 40' Date: Aug. 2004
Designed by: R.R.
Drawn by: M.K.
Checked by: P.J.
Approved by: D.G.
Project No. 2178-20-001

C57

L:\119731\120-02178-005\PROD\5_0_DESIGN-REFERENCE\5_13_DRAWINGS\C05.DWG

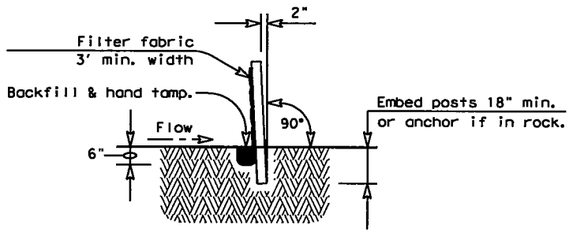

SECTION A-A

SEDIMENT CONTROL FENCE USAGE GUIDELINES

A sediment control fence may be constructed near the downstream perimeter of a disturbed area along a contour to intercept sediment from overland runoff. A 2 year storm frequency may be used to calculate the flow rate to be filtered.

Sediment control fence should be sized to filter a max. flow through rate of 100 GPM/FT^2. Sediment control fence is not recommended to control erosion from a drainage area larger than 2 acres.

PLAN SHEET LEGEND

Sediment Control Fence —— SCF ——

GENERAL NOTES

1. The guidelines shown hereon are suggestions only and may be modified by the Engineer.

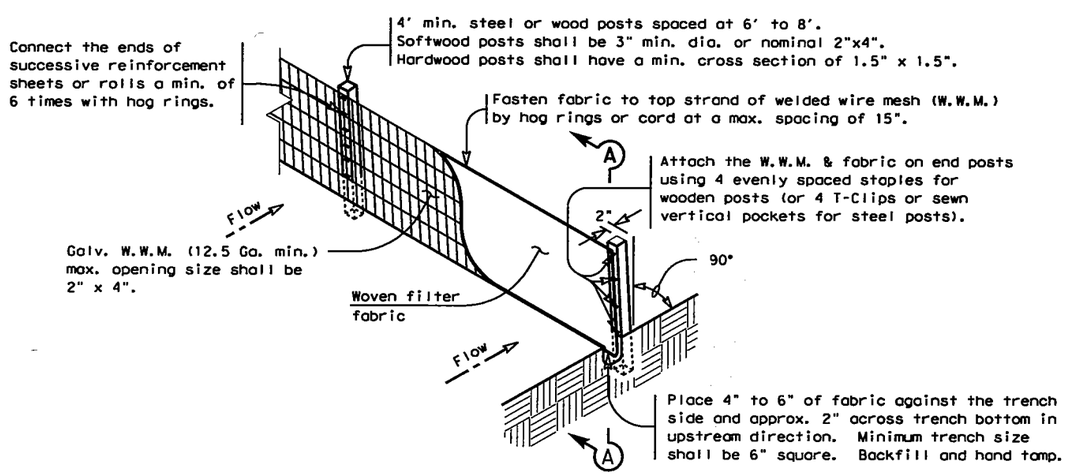

TEMPORARY SEDIMENT CONTROL FENCE

—— SCF ——

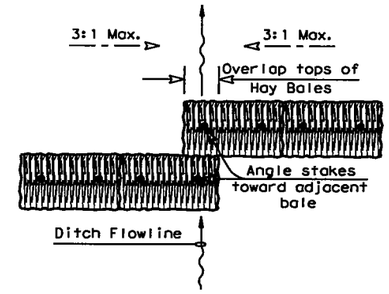

PLAN VIEW

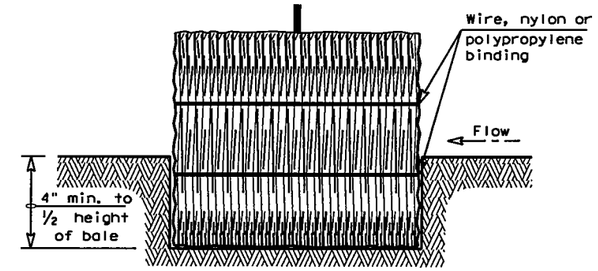

SECTION B-B

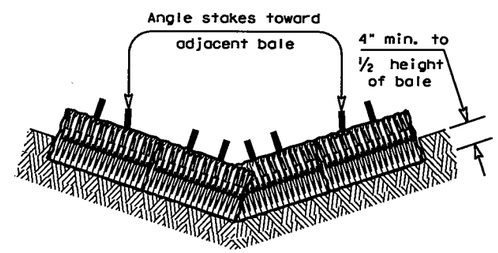

PROFILE VIEW

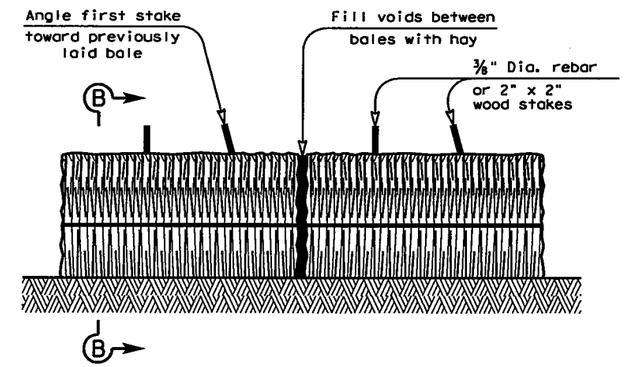

BALED HAY FOR EROSION CONTROL

—— BH ——

PLANS SHEET LEGEND

Baled Hay —— BH ——

BALED HAY USAGE GUIDELINES

A Baled Hay installation may be constructed near the downstream perimeter of a disturbed area along a contour to intercept sediment from overland runoff. A two year storm frequency may be used to calculate the flow rate to be filtered. The installation should be sized to filter a maximum flow thru rate of 5 GPM/FT^2 of cross sectional area. Baled hay may be used at the following locations:

1. Where the runoff approaching the baled hay flows over disturbed soil for less than 100'. If the slope of the disturbed soil exceeds 10%, the length of slope upstream the baled hay should be less than 50'.
2. Where the installation will be required for less than 3 months.
3. Where the contributing drainage area is less than ½ acre.

For Baled Hay installations in small ditches, the additional following considerations apply:

1. The ditch sideslopes should be graded as flat as possible to maximize the drainage flowrate thru the hay.
2. The ditch should be graded large enough to contain the overtopping drainage when sediment has filled to the top of the baled hay.

Bales should be replaced usually every 2 months or more often during wet weather when loss of structural integrity is accelerated.

GENERAL NOTES

1. Hay bales shall be a minimum of 30" in length and weigh a minimum of 50 Lbs.
2. Hay bales shall be bound by either wire or nylon or polypropylene string. The bales shall be composed entirely of vegetative matter.
3. Hay bales shall be embedded in the soil a minimum of 4" and where possible ½ the height of the bale.
4. Hay bales shall be placed in a row with ends tightly abutting the adjacent bales. The bales shall be placed with bindings parallel to the ground.
5. Hay bales shall be securely anchored in place with ⅜" Dia. rebar or 2" x 2" wood stakes, driven through the bales. The first stake shall be angled towards the previously laid bale to force the bales together.
6. The guidelines shown hereon are suggestions only and may be modified by the Engineer.

DISCLAIMER:
The use of this standard is governed by the "Texas Engineering Practice Act". No warranty of any kind is made by TxDOT for any purpose whatsoever. TxDOT assumes no responsibility for the conversion of this standard to other formats or for incorrect results or damages resulting from its use.

LEVELS DISPLAYED

1	3	4	5	6	7	8	9	10	11	12	13	14	15	16
17	18	19	20	21	22	23	24	25	26	27	28	29	30	31	32
33	34	35	36	37	38	39	40	41	42	43	44	45	46	47	48
49	50	51	52	53	54	55	56	57	58	59	60	61	62	63

Texas Department of Transportation
Design Division (Roadway)

TEMPORARY EROSION, SEDIMENT AND WATER POLLUTION CONTROL MEASURES

FENCED & BALED HAY

EC(1)-93

FILE: EC193.DGN	DN: HEJ	CK: HEJ	DW: BGD	CK:	
©TxDOT JUNE 1993	DISTRICT	FEDERAL AID PROJECT			SHEET
REVISIONS	COUNTY		CONTROL	SECT	JOB	HIGHWAY

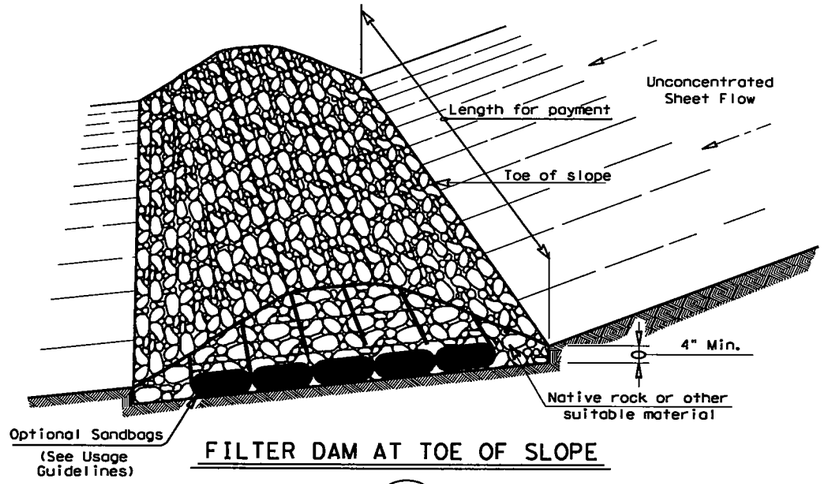

FILTER DAM AT TOE OF SLOPE

RFD1

TYPE 1

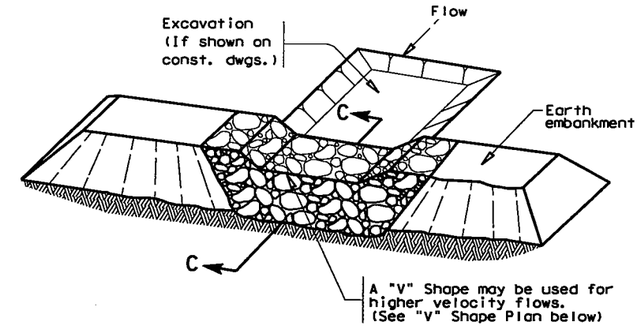

FILTER DAM AT SEDIMENT TRAP

RFD1 — OR — RFD2

TYPE 1 OR TYPE 2

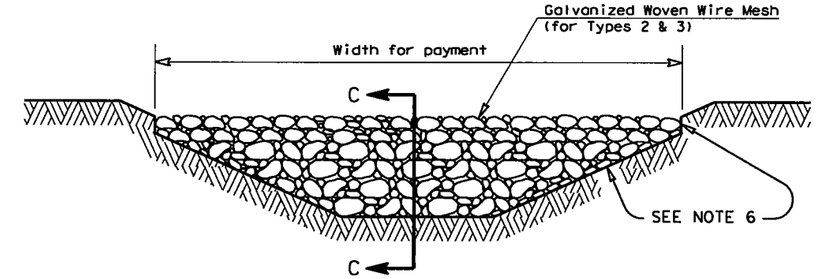

FILTER DAM AT CHANNEL SECTIONS

RFD1 — OR — RFD2 — OR — RFD3

TYPE 1 OR TYPE 2

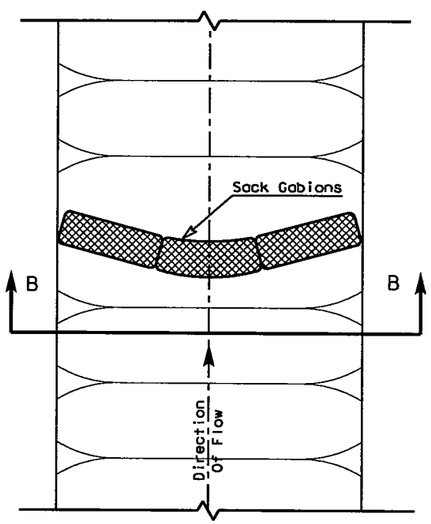

PLAN VIEW

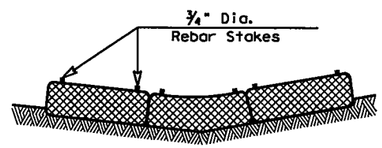

SECTION B-B

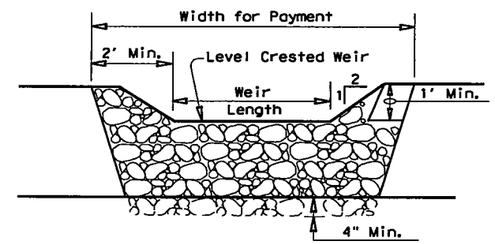

PROFILE

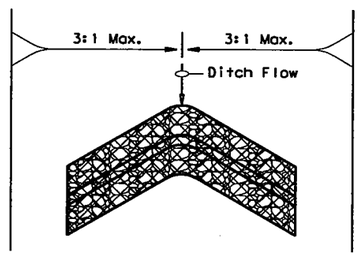

"V" SHAPE

(Plan View)

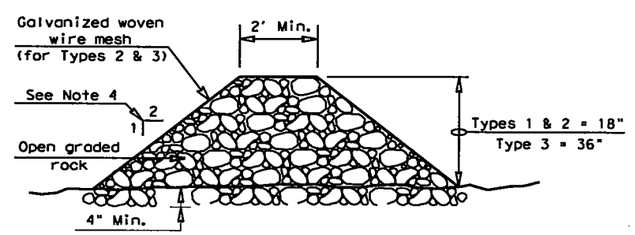

SECTION C-C

PLANS SHEET LEGEND

Type 1 Rock Filter Dam — RFD1

Type 2 Rock Filter Dam — RFD2

Type 3 Rock Filter Dam — RFD3

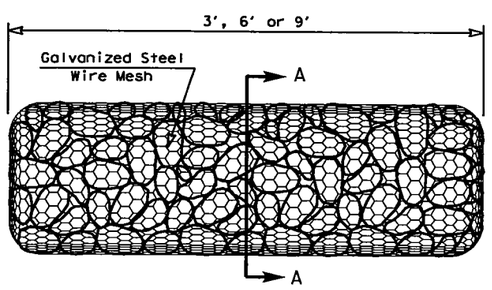

TYPE 4 (SACK GABIONS)

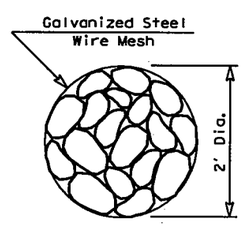

SECTION A-A

ROCK FILTER DAM USAGE GUIDELINES

Rock Filter Dams should be constructed downstream from disturbed areas to intercept sediment from overland runoff and/or concentrated flow. The dams should be sized to filter a maximum flow through rate of 60 GPM/FT^2 of cross sectional area. A 2 year storm frequency may be used to calculate the flow rate.

Type 1 (18" high with no wire mesh): Type 1 may be used at the toe of slopes, around inlets, in small ditches, and at dike or swale outlets. This type of dam is recommended to control erosion from a drainage area of 5 acres or less. Type 1 may not be used in concentrated high velocity flows (approx. 8 Ft/Sec or more) in which aggregate wash out may occur. Sandbags may be used at the embedded foundation (4" deep min.) for better filtering efficiency of low flows if called for on the plans or directed by the Engineer.

Type 2 (18" high with wire mesh): Type 2 may be used in ditches and at dike or swale outlets.

Type 3 (36" high with wire mesh): Type 3 may be used in stream flow and should be secured to the stream bed.

Type 4 (Sack gabions): Type 4 May be used in ditches and smaller channels to form an erosion control dam.

GENERAL NOTES

1. If shown on the plans or directed by the Engineer, filter dams should be placed near the toe of slopes where erosion is anticipated, upstream and/or downstream at drainage structures, and in roadway ditches and channels to collect sediment.
2. Materials (aggregate, wire mesh, sandbags, etc.) shall be as indicated by the specification for "Rock Filter Dams for Erosion and Sedimentation Control".
3. The rock filter dam dimensions shall be as indicated on the SW3P plans.
4. Side slopes should be 2:1 or flatter. Dams within the safety zone shall have sideslopes of 6:1 or flatter.
5. Maintain a minimum of 1' between top of rock filter dam weir and top of embankment for filter dams at sediment traps.
6. Filter dams should be embedded a minimum of 4" into existing ground.
7. The sediment trap for ponding of sediment laden runoff shall be of the dimensions shown on the plans.
8. Rock filter dam types 2 & 3 shall be secured with 20 gauge galvanized woven wire mesh with 1" diameter hexagonal openings. The aggregate shall be placed on the mesh to the height & slopes specified. The mesh shall be folded at the upstream side over the aggregate and tightly secured to itself on the downstream side using wire ties or hog rings. In stream use the mesh should be secured or staked to the stream bed prior to aggregate placement.
9. Sack Gabions should be staked down with ¾" dia. rebar stakes.
10. Flow outlet should be onto a stabilized area (vegetation, rock, etc.).
11. The guidelines shown hereon are suggestions only and may be modified by the Engineer.

DISCLAIMER:
The use of this standard is governed by the "Texas Engineering Practice Act". No warranty of any kind is made by TxDOT for any purpose whatsoever. TxDOT assumes no responsibility for the conversion of this standard to other formats or for incorrect results or damages resulting from its use.

LEVELS DISPLAYED

1	3	4	5	6	7	8	9	10	11	12	13	14	15	16			
17	18	19	20	21	22	23	24	25	26	27	28	29	30	31	32		
33	34	35	36	37	38	39	40	41	42	43	44	45	46	47	48		
49	50	51	52	53	54	55	56	57	58	59	60	61	62	63			

Texas Department of Transportation
Design Division (Roadway)

TEMPORARY EROSION, SEDIMENT AND WATER POLLUTION CONTROL MEASURES

ROCK FILTER DAMS

EC(2)-93

FILE: EC293.DGN	DN: HEJ	CK: HEJ	DW: BGD	CK:
© TxDOT JUNE 1993	DISTRICT	FEDERAL AID PROJECT		SHEET
REVISIONS				
	COUNTY	CONTROL	SECT	JOB	HIGHWAY

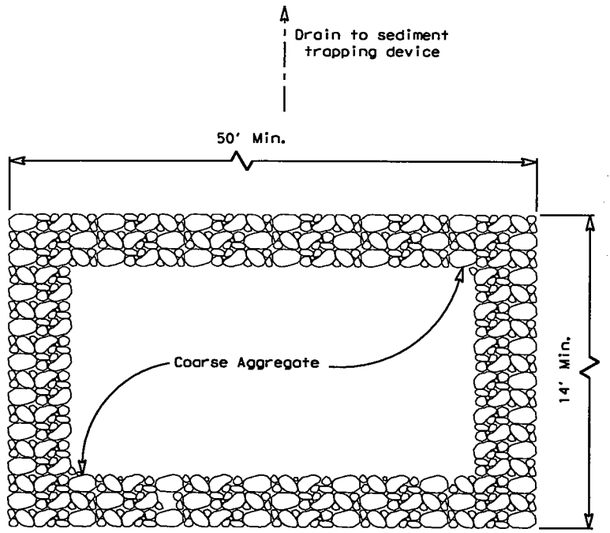

PLAN

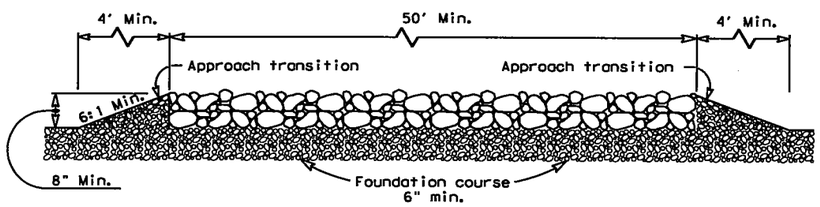

PROFILE

CONSTRUCTION EXIT (TYPE 1)

GENERAL NOTES

1. The length of the type 1 construction exit shall be as indicated on the plans, but not less than 50'.
2. The coarse aggregate should be open graded with a size of 4" to 8".
3. The approach transitions should be no steeper than 6:1 and constructed as directed by the Engineer.
4. The construction exit foundation course shall be flexible base, bituminous concrete, portland cement concrete or other material as approved by the Engineer.
5. The construction exit shall be graded to allow drainage to a sediment trapping device.
6. The guidelines shown hereon are suggestions only and may be modified by the Engineer.

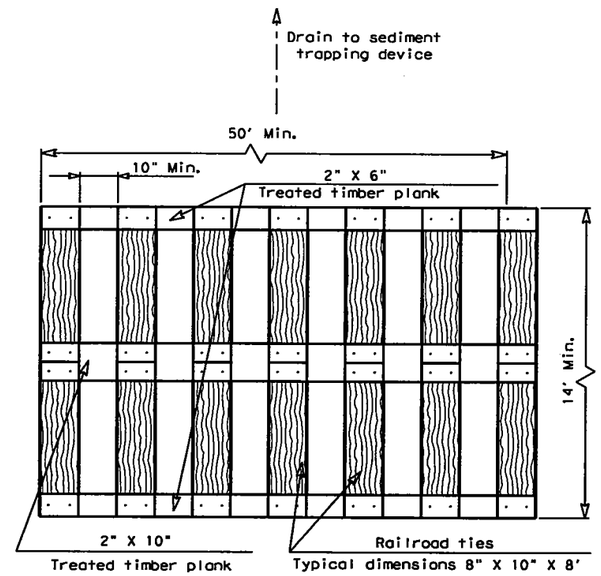

PLAN

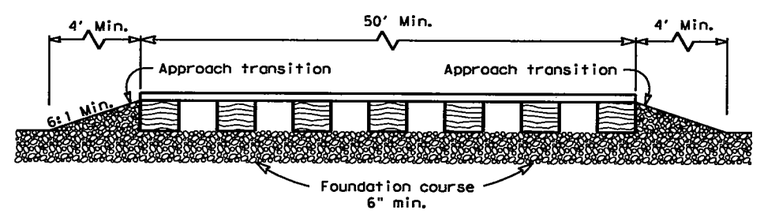

PROFILE

CONSTRUCTION EXIT (TYPE 2)

GENERAL NOTES

1. The length of the type 2 construction exit shall be as indicated on the plans, but not less than 50'.
2. The treated timber planks shall be attached to the railroad ties with ½"x 6" min. lag bolts. Other fasteners may be used as approved by the Engineer.
3. The treated timber planks shall be #2 grade min., and should be free from large and loose knots.
4. The approach transitions shall be no steeper than 6:1 and constructed as directed by the Engineer.
5. The construction exit foundation course shall be flexible base, bituminous concrete, portland cement concrete or other material as approved by the Engineer.
6. The construction exit should be graded to allow drainage to a sediment trapping device.
7. The guidelines shown hereon are suggestions only and may be modified by the Engineer.

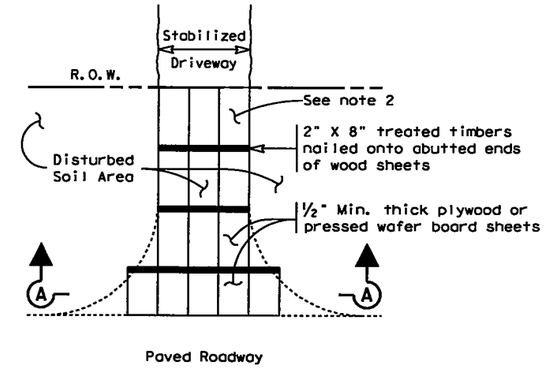

PLAN

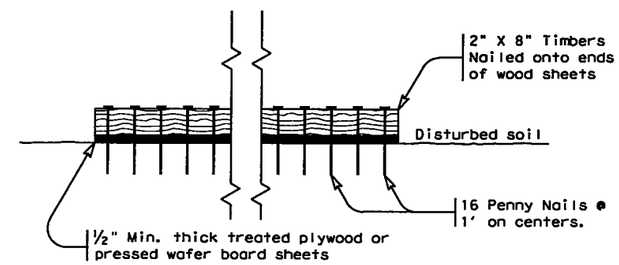

SECTION A-A

CONSTRUCTION EXIT (TYPE 3)

GENERAL NOTES

1. The length of the type 3 construction exit shall be as shown on the plans, or as directed by the Engineer.
2. The type 3 construction exit may be constructed from open graded crushed stone with a size of two to four inches spread a min. of 4" thick to the limits shown on the plans.
3. The treated timber planks shall be #2 grade min., and should be free from large and loose knots.
4. The guidelines shown hereon are suggestions only and may be modified by the Engineer.

DISCLAIMER:
The use of this standard is governed by the "Texas Engineering Practice Act". No warranty of any kind is made by TxDOT for any purpose whatsoever. TxDOT assumes no responsibility for the conversion of this standard to other formats or for incorrect results or damages resulting from its use.

LEVELS DISPLAYED

1		3	4	5		6	7		8	9	10	11	12	13	14	15	16
17	18	19	20	21	22	23	24	25	26	27	28	29	30	31	32
33	34	35	36	37	38	39	40	41	42	43	44	45	46	47	48
49	50	51	52	53	54	55	56	57	58	59	60	61	62	63

Texas Department of Transportation
Design Division (Roadway)

TEMPORARY EROSION, SEDIMENT AND WATER POLLUTION CONTROL MEASURES

CONSTRUCTION EXITS

EC(3)-93

FILE: EC393.DGN	DN: HEJ	CK: HEJ	DW: BGD	CK:
©TxDOT JUNE 1993	DISTRICT	FEDERAL AID PROJECT		SHEET
REVISIONS	COUNTY	CONTROL	SECT	JOB	HIGHWAY

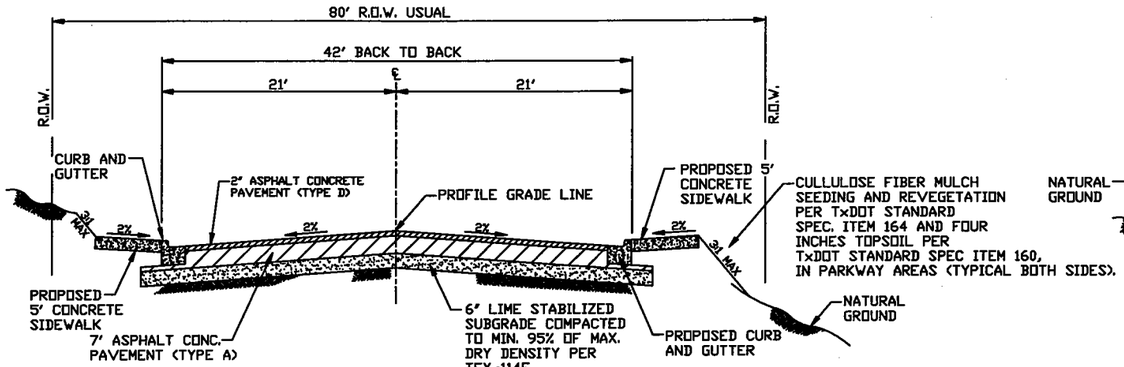

NOTE:
1. TYPICAL ROADWAY SECTION FOR CLEARWATER PASED SIMILAR TO THIS SECTION, EXCEPT ROADWAY WIDTH IS 40'.

2. TYPICAL ROADWAY SECTION FROM STA. 15+00 TO 16+00 SIMILAR TO THIS SECTION EXCEPT CROSS SLOPE IS IN TRANSITION FROM CENETR LINE CROWN AT STA. 15+00 TO FULL SIDE CROWN AT STA. 16+00.

MAIN STREET
TYPICAL ROADWAY SECTION
STA. 12+29 TO STA. 15+00
STA. 43+00 TO STA. 45+60

N.T.S.

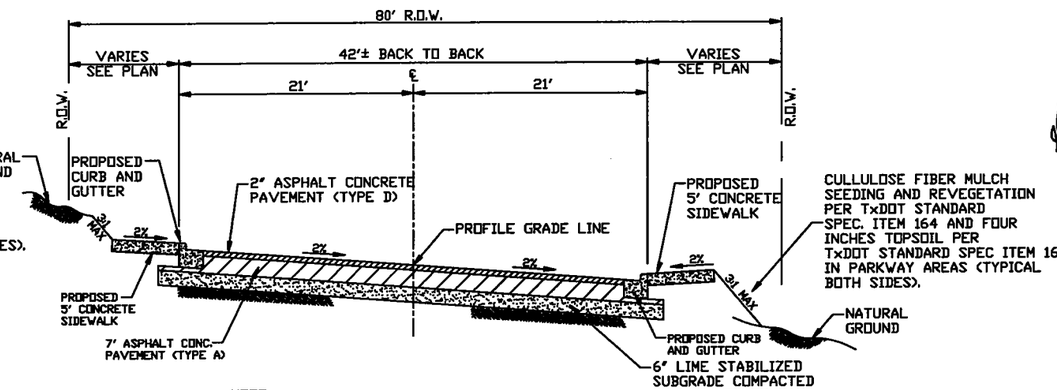

NOTE:
1. TYPICAL ROADWAY SECTION FROM 42+00 TO 43+00 SIMILAR TO THIS SECTION EXCEPT CROSS SLOPE IS IN TRANSITION FROM FULL SIDE CROWN AT 42+00 TO CENTER LINE CROWN AT STA. 43+00.

MAIN STREET
TYPICAL ROADWAY SECTION
STA. 16+00 TO STA. 42+00

N.T.S.

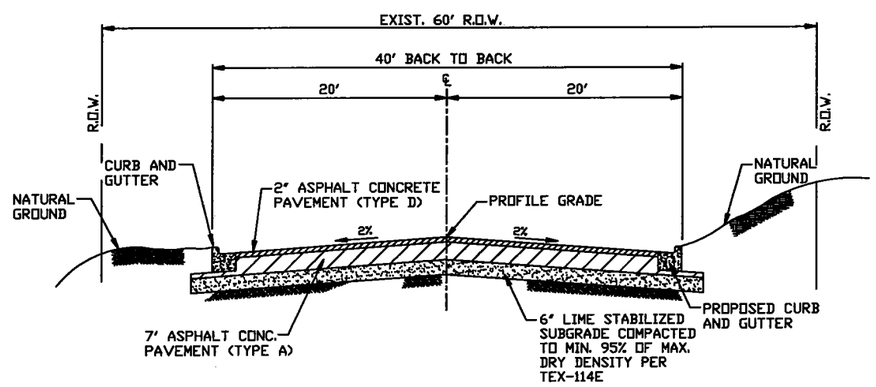

MEADOWVIEW LANE
TYPICAL ROADWAY SECTION

N.T.S.

NOTE:

APPLICATION OF LIME TREATMENT SHALL BE PERFORMED IN ACCORDANCE WITH TxDOT SPEC. ITEM NO. 260.

Lockwood, Andrews & Newnam, Inc.

STATE OF TEXAS
MARK ANN GREEN
79721
LICENSED
PROFESSIONAL ENGINEER

City of Kerrville
Main Street
Extension
Project

MAIN STREET
TYPICAL PAVEMENT
SECTIONS

No.	Date	Revisions	App.

Scale - Date: Aug. 2004
Designed by T.C.
Drawn by M.K.
Checked by P.J.
Approved by D.G.
Project No. 2178-20-001

C61

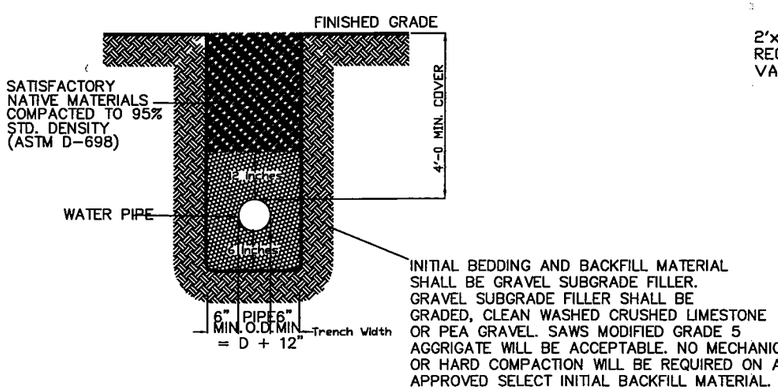

Pipe Bedding and Backfill Detail

N.T.S.

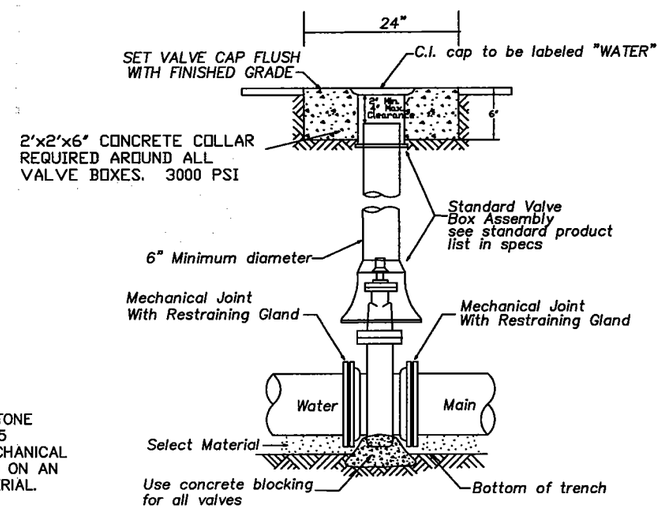

NOTE: ALL FLUSHING AND GATE VALVES TO BE AWWA STANDARD COUNTERCLOCKWISE OPENING WITH RESILIENT SEATS.
VALVE NUT EXTENSION PER CITY OF KERRVILLE STANDARD SPECIFICATIONS.

INSTALLATION OF NON-GEARED GATE VALVE WITH VALVE BOX AND EXTENSION

N.T.S.

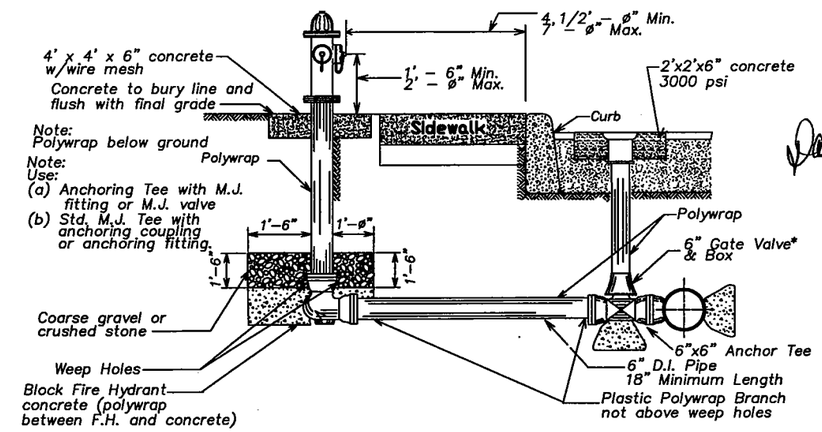

FIRE HYDRANT INSTALLATION

N.T.S.

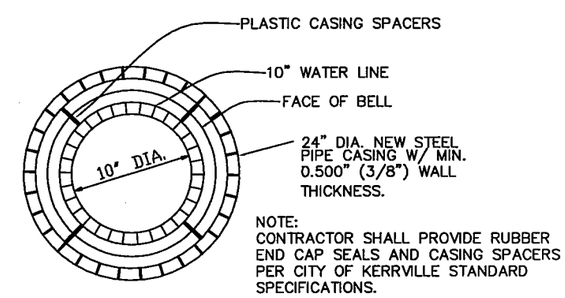

NOTE:
CONTRACTOR SHALL PROVIDE RUBBER END CAP SEALS AND CASING SPACERS PER CITY OF KERRVILLE STANDARD SPECIFICATIONS.

24" CASING DETAIL

N.T.S.

Lockwood, Andrews & Newnam, Inc.

STATE OF TEXAS
DAWN ANN GREEN
79721
LICENSED
PROFESSIONAL ENGINEER

Dawn Green 9-30-04

City of Kerrville
Main Street
Extension
Project

WATER STANDARD DETAILS

No.	Date	Revisions	App.

Scale: Date:
Designed by: T.C.
Drawn by: M.K.
Checked by: P.J.
Approved by: D.G.
Project No. 2178-20-001

C62

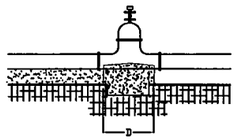

GATE VALVE

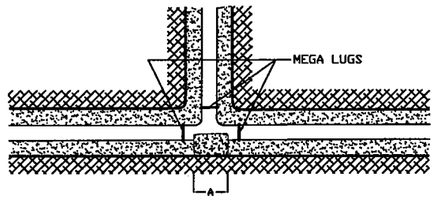

TEE

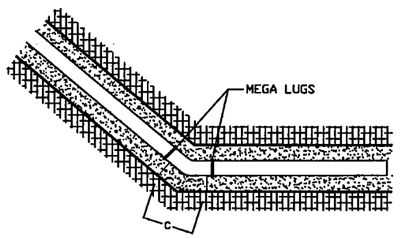

ALL OTHER BENDS

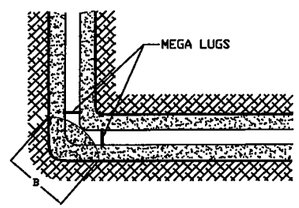

90° BENDS

THRUST BLOCK SCHEDULE				
Pipe Size	A	B	C	D
	Plugs & Tees	90 deg. Bend	45 deg Bend	Gate Valves
6"	1' - 0"	1' - 2"	1' - 2"	NONE
8"	1' - 3"	1' - 6"	1' - 6"	NONE
12"	2' - 8"	3' - 0"	2' - 3"	1' - 0"

NOTES:
1.) THRUST BLOCKS SHALL BE MIN. 2000 P.S.I. CONCRETE.
2.) THRUST BLOCKS PLACED AGAINST UNDISTURBED EARTH.
3.) CONCRETE THRUST BLOCKING SHALL BE PROVIDED WHERE CHANGE IN DIRECTION OCCURS, AT TEES, BENDS, CROSSES, CHANGES IN SIZES, STOP(DEAD ENDS), VALVES AND/OR AS SHOWN HEREIN.
4.) CONTRACTOR SHALL USE THE THRUST BLOCK SCHEDULE FOR DIMENSIONS OF THRUST BLOCKING AREA.

THRUST BLOCK DETAIL

NOT TO SCALE

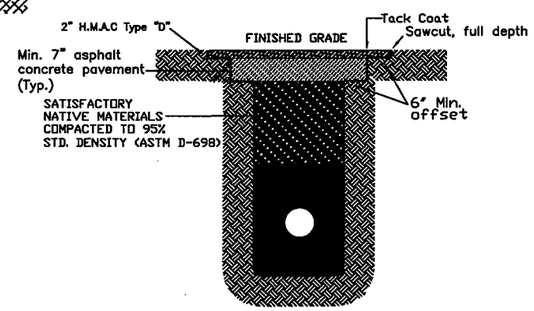

Construction Notes

1. Provide a 6" bridge either side of pipe trench, for 7" ACP (Typ.) "A" and 2" HMAC suface course.
2. Contractor must provide steel trench plates rated for H-20 loadings for trench repair operations.
3. For concrete pavement repair, saw-cut and remove existing concrete pavement as required to install water line. Bed and backfill water as shown in detail. In lieu of asphalt surface and base course, place minimum 6" thick, 3000 psi concrete reinforced with #4 bar @ 12" b/w. Dowel into existing concrete on both sides with ½" dowel x 18" length @ 12" c-c.

Asphalt Pavement Repair Detail

Notes:
1. Embed all exterior metal surfaces in silica sand
2. All reinforcing bars in the Reaction Block shall be #4

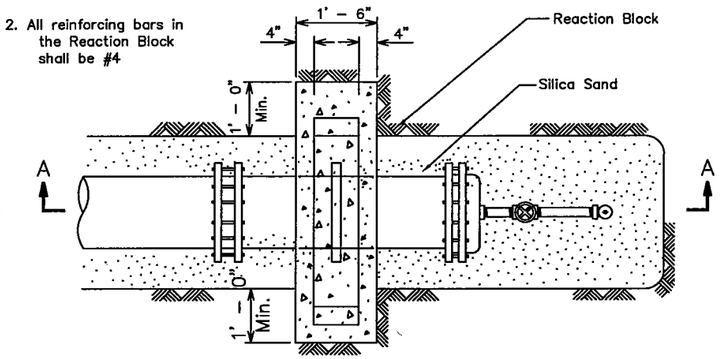

PLAN

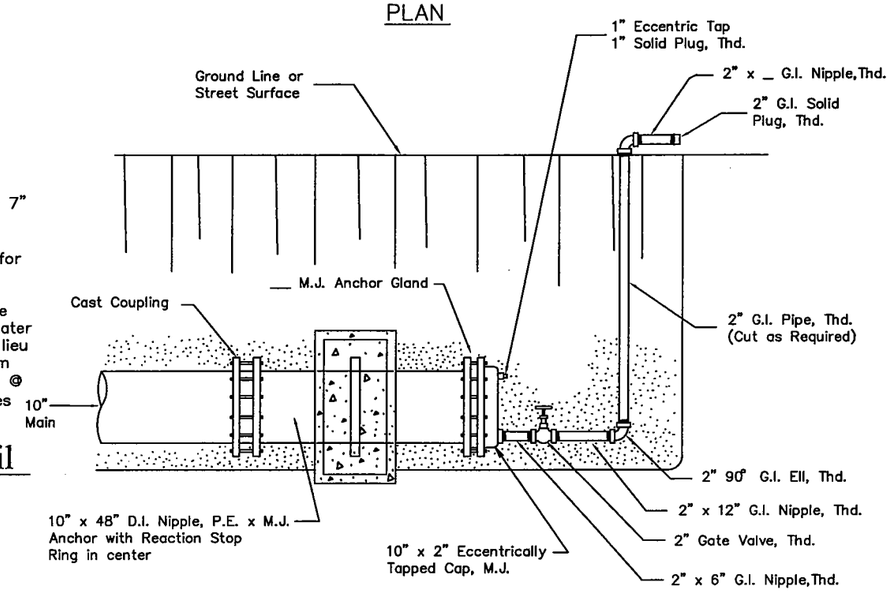

SECTION A-A

Lockwood, Andrews & Newnam, Inc.

STATE OF TEXAS
DAWN ANN GREEN
79721
LICENSED
PROFESSIONAL ENGINEER

City of Kerrville
Main Street
Extension
Project

WATER LINE STANDARD DETAILS

No.	Date	Revisions	App.

Scale:
Date:
Designed by T.C.
Drawn by M.K.
Checked by P.J.
Approved by D.G.
Project No. 2178-20-001

C63

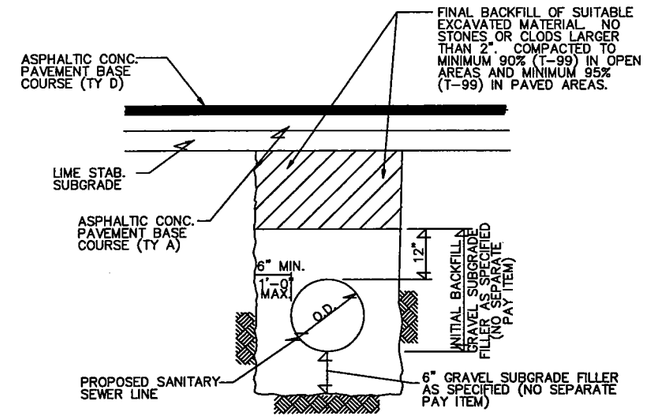

PIPE BEDDING AND BACKFILL DETAIL

NTS

Lockwood, Andrews & Newnam, Inc.

STATE OF TEXAS
DAWN ANN GREEN
79721
LICENSED
PROFESSIONAL ENGINEER

Dawn Green 9-30-04

City of Kerrville
Main Street
Extension
Project

SANITARY SEWER DETAILS

No.	Date	Revisions	App.

Scale:
Date:
Designed by: T.C.
Drawn by: M.K.
Checked by: P.J.
Approved by: D.G.
Project No. 2178-20-001

C64

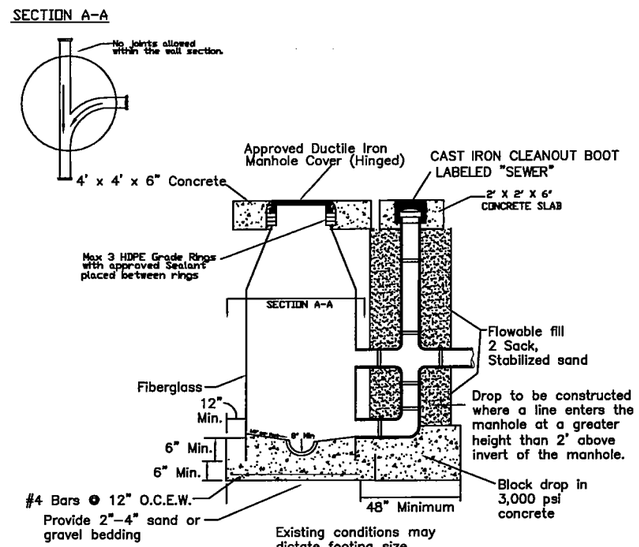

Manhole Sizing

*6' through 8' - 48' ID
*10' through 12' - 60' ID
*14' through 20' - 72' ID
*20' or Larger and other than in-line manholes will be sized by City of Kerrville Engineering

DROP FIBERGLASS MANHOLE DETAIL

SCALE : NONE

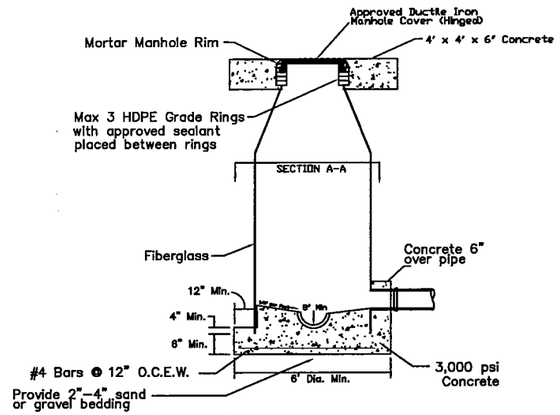

SECTION A-A

MH Sizing

20" or larger and other than in-line manholes will be sized by City of Kerrville Engineering

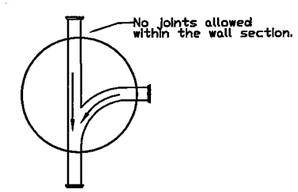

FIBERGLASS MANHOLE DETAIL

SCALE : NONE

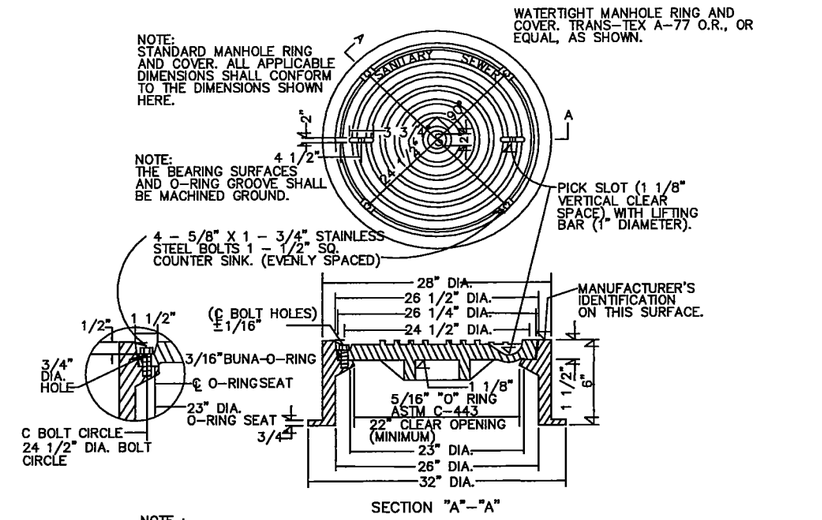

SECTION "A"-"A"

NOTE :
ALL DIMENSIONS MAY VARY EXCEPT THE DIAMETER OR THE LID, AND THE DIAMETER OF THE CENTER LINE OF THE BOLT HOLES, AND THE MINIMUM DIAMETER OF THE CLEAR OPENING. THE COMBINED WEIGHT OF THE MANHOLE RING AND COVER MUST BE AT LEAST 400LBS. ALL MANHOLE COVERS SHALL BE BOLT DOWN - WATER TIGHT.

MANHOLE RING & COVER DETAIL

NOTE : "B"
SEWER PIPE CONNECTING TO MANHOLES ABOVE THE LOWEST SEWER SHALL PROJECT TWO INCHES (2") FROM THE INSIDE WALL, AND INSTALLED WITH A JOINT A MINIMUM OF SIX INCHES (6") AND A MAXIMUM OF EIGHTEEN INCHES (18") FROM OUTSIDE MANHOLE WALL)

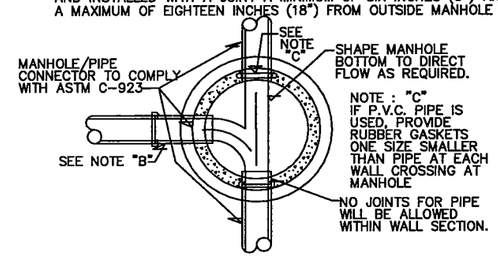

MANHOLE FLOOR PLAN

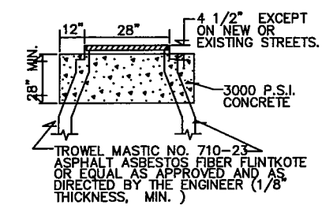

NOTE : MANHOLE RING ENCASEMENT IS REQUIRED ON ALL PROPOSED MANHOLES. PAYMENT FOR MANHOLE RING ENCASEMENT SHALL BE INCLUDED IN COST OF MANHOLE.

SDR 26
PVC Pipe

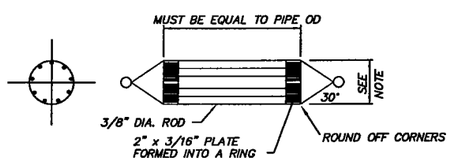

NOTE:
*MANDREL MUST HAVE MANUFACTURE ID PLATE INTACT.
*MANDREL MUST HAVE ODD NUMBER OF RUNNERS, 9 MINIMUM.
*AFTER CONSTRUCTION IS COMPLETED, TRUE O.D. DIMENSION FOR THE FULL LENGTH OF 'B' TO 0.010 INCH BY TOOL AND LATH OR GRINDING.
*CONTRACTOR MUST PROVIDE PROVING RING.

GO, NO GO DEFLECTION TESTING MANDREL

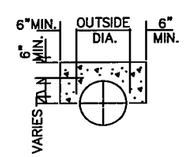

TYPICAL CONCRETE SADDLE

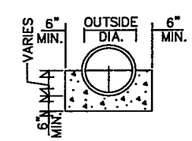

TYPICAL CONCRETE CRADLE

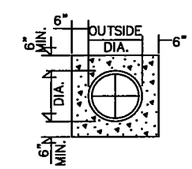

TYPICAL CONCRETE ENCASE

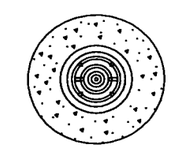

MANHOLE RING ENCASEMENT DETAIL

(ALL MANHOLES)

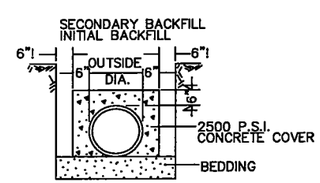

CONCRETE COVER FOR FLEXIBLE PIPE

TO BE USED WHENEVER TRENCH WIDTH IS GREATER THAN 2 FT. PLUS O.D.

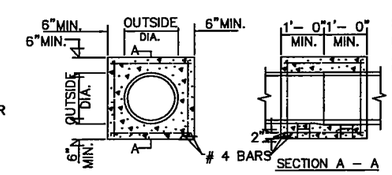

AFTER CENTERING PIPE ENDS WRAP JOINTS WITH 3 IN. WIDE POLYVINYL TAPE OR RUBBER ADAPTER, CAN TEX. 1-70A OR EQUAL.

PIPE SECTIONS TO BE BLOCKED & SUPPORTED SIMILAR TO ENCASEMENT DETAIL ABOVE SUBJECT TO APPROVAL.

CONCRETE JOINTING COLLAR

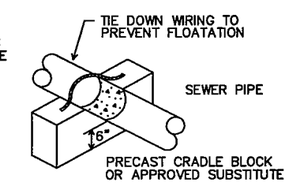

TYPICAL SUPPORT FOR ENCASEMENT OR CRADLE

Lockwood, Andrews & Newnam, Inc.

STATE OF TEXAS
JOHN W. GREEN
78721
LICENSED PROFESSIONAL ENGINEER

John W. Green 4-30-04

City of Kerrville
Main Street
Extension
Project

SANITARY SEWER DETAILS

No.	Date	Revisions	App.

Scale: Date:
Designed by: T.C.
Drawn by: M.K.
Checked by: P.J.
Approved by: D.G.
Project No. 2178-20-001

C65

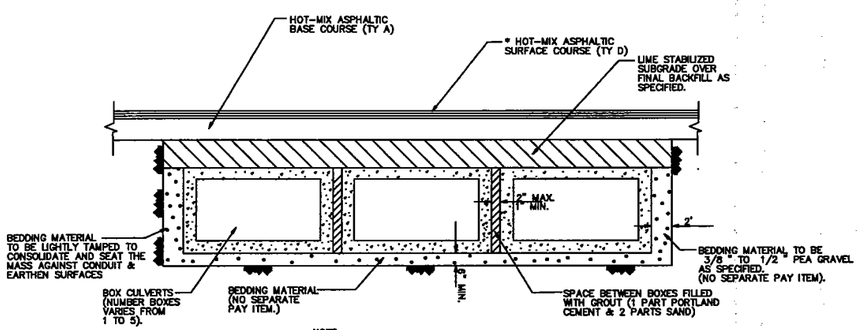

NOTE:
* WHERE A FULL PAVEMENT SECTION IS NOT APPLICABLE ON TOP OF THE BOX, CONTRACTOR TO PLACE HMAC (TY D) (2" MINIMUM) FOR ENTIRE SECTION.

MUTIPLE BOX CULVERTS BEDDING & BACKFILL DETAIL

N. T. S.

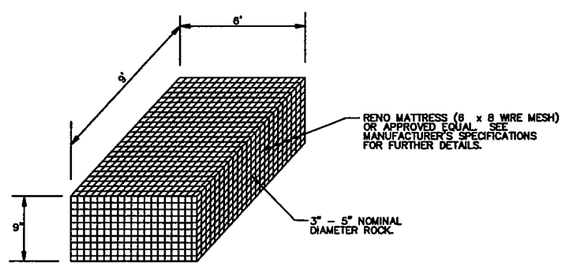

NOTE:
ROCK GABIONS SHALL BE CONSTRUCTED AND INSTALLED PER TxDOT SPECIAL SPECIFICATION NO. 5014.

DRY - STACK ROCK GABION DETAIL

NTS

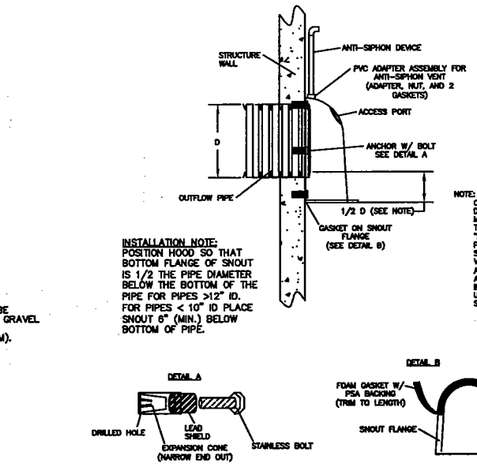

INSTALLATION NOTE:
POSITION HOOD SO THAT BOTTOM FLANGE OF SNOUT IS 1/2 THE PIPE DIAMETER BELOW THE BOTTOM OF THE PIPE FOR PIPES >12" ID. FOR PIPES < 10" ID PLACE SNOUT 6" (MIN.) BELOW BOTTOM OF PIPE.

NOTE:
CONTRACTOR SHALL FURNISH AND INSTALL OIL & DEBRIS STOP ON THE EXIT PIPE AT STORMWATER MANHOLE LOCATIONS SHOWN ON THE DRAWINGS. THE OIL & DEBRIS STOP MODEL SHALL BE THE "SNOUT" AS MANUFACTURED BY BEST MANAGEMENT PRODUCTS, INC. OR APPROVED EQUAL. THE LOCAL SALES REPRESENTATIVE FOR THIS PRODUCT IS VAL VALEZ WITH EAST JORDAN IRON WORKS, SAN ANTONIO, TEXAS. (210)646-3224. MEASUREMENT AND PAYMENT SHALL BE BASED ON EACH UNIT INSTALLED REGARDLESS OF SIZE. A TOTAL OF 4 UNITS IN VARYING SIZES WILL BE REQUIRED. PIPE SIZES RANGE FROM 24-INCHES TO 42-INCHES.

OIL-WATER-DEBRIS SEPARATOR FOR STORMWATER INSTALLATION DIAGRAM (TYPICAL)

N. T. S.

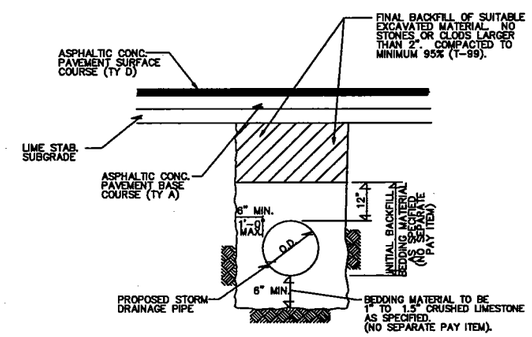

BEDDING AND BACKFILL DETAIL

NTS

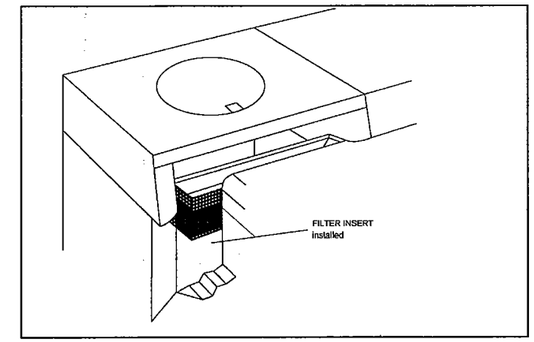

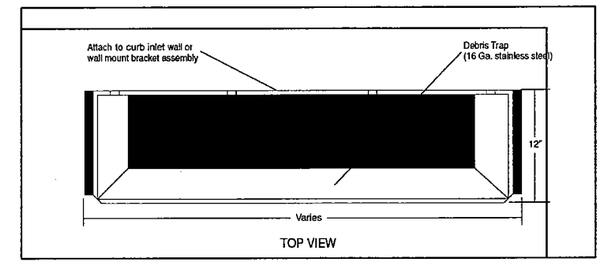

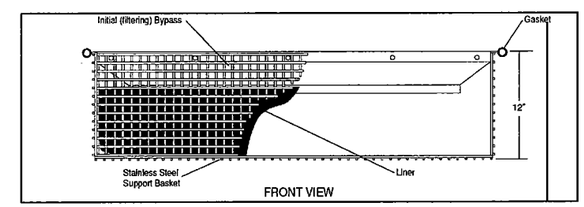

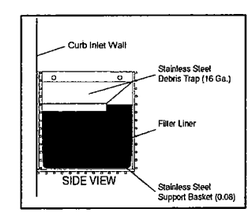

NOTE:
CONTRACTOR SHALL FURNISH AND INSTALL FILTER INSERTS ACROSS THE ENTIRE WIDTH OF EVERY CURB INLET. THE FILTER INSERTS SHALL BE "FLOGARD+PLUS" AS MANUFACTURED BY KRISTAR ENTERPRISES OR APPROVED EQUAL. THE DISTRIBUTOR FOR THIS AREA IS AQUATECH SYSTEMS LOCATED IN PLANO, TEXAS AT (972)881-2288. MEASUREMENT AND PAYMENT FOR THE FILTER INSERTS SHALL BE BASED EACH UNIT INSTALLED REGARDLESS OF CURB INLET LENGTH. THE FILTER INSERTS SHALL BE INSTALLED IN ALL CURB INLETS RANGING IN LENGTH FROM 10' TO 30'.

CURB INLET FILTER INSERTS

N.T.S.

LGN Lockwood, Andrews & Newnam, Inc.
STATE OF TEXAS
DAWN ANN GREEN
79721
LICENSED
PROFESSIONAL ENGINEER

Dawn Green 9-30-04

City of Kerrville
Main Street
Extension
Project

STORM DRAINAGE DETAILS

No.	Date	Revisions	App.

Scale: Date:
Designed by: T.C.
Drawn by: M.K.
Checked by: P.J.
Approved by: D.G.
Project No. 2178-20-001

C66

TABLE OF DIMENSIONS & REINFORCING STEEL
(Wings for One Structure End)

Dimensions					Variable Reinforcing				Estimated ④ Quantities per ft of wing (2~Wings)		Estimated Quantities per ft of Toewall (1~Toewall)	
					Bars J1		Bars J2					
Maximum Wingwall Height Hw	W	X	Y	Z	Size	Spa	Size	Spa	Reinf (Lb/Ft)	Conc (CY/Ft)	Reinf (Lb/Ft)	Conc (CY/Ft)
2'-6"	2'-10"	10"	1'-0"	7"	#4	1'-0"	#4	1'-0"	43.13	0.406	6.85	0.071
2'-9"	2'-10"	10"	1'-0"	7"	#4	1'-0"	#4	1'-0"	43.80	0.424	6.85	0.071
3'-0"	2'-10"	10"	1'-0"	7"	#4	1'-0"	#4	1'-0"	44.47	0.444	6.85	0.071
3'-3"	2'-10"	10"	1'-0"	7"	#4	1'-0"	#4	1'-0"	47.81	0.462	6.85	0.071
3'-6"	2'-10"	10"	1'-0"	7"	#4	1'-0"	#4	1'-0"	48.48	0.480	6.85	0.071
4'-0"	3'-2"	1'-2"	1'-0"	7"	#4	1'-0"	#4	1'-0"	50.26	0.532	6.85	0.071
4'-6"	3'-2"	1'-2"	1'-0"	7"	#4	1'-0"	#4	1'-0"	54.27	0.568	6.85	0.071
5'-0"	3'-9"	1'-7"	1'-2"	7"	#4	1'-0"	#4	1'-0"	57.94	0.632	6.96	0.075
5'-6"	3'-9"	1'-7"	1'-2"	7"	#4	1'-0"	#4	1'-0"	61.95	0.668	6.96	0.075
6'-0"	4'-4"	2'-0"	1'-4"	7"	#5	1'-0"	#5	1'-0"	75.16	0.730	7.07	0.078
6'-6"	4'-4"	2'-0"	1'-4"	7"	#5	1'-0"	#5	1'-0"	79.54	0.768	7.07	0.078
7'-0"	5'-0"	2'-3"	1'-9"	8"	#5	1'-0"	#5	1'-0"	86.65	0.864	8.07	0.093
7'-6"	5'-0"	2'-3"	1'-9"	8"	#5	1'-0"	#5	1'-0"	91.03	0.902	8.07	0.093
8'-0"	5'-6"	2'-8"	1'-10"	8"	#5	6"	#5	6"	133.54	0.962	8.13	0.095
8'-6"	5'-6"	2'-8"	1'-10"	8"	#5	6"	#5	6"	138.96	1.000	8.13	0.095
9'-6"	6'-0"	2'-10"	2'-2"	9"	#5	6"	#5	6"	151.43	1.136	8.41	0.110
10'-6"	6'-5"	3'-0"	2'-5"	9"	#6	6"	#5	6"	190.76	1.234	8.57	0.117
11'-6"	7'-2"	3'-6"	2'-8"	11"	#6	6"	#6	6"	224.62	1.438	9.52	0.140
12'-6"	7'-8"	3'-9"	2'-11"	1'-0"	#7	6"	#6	6"	277.90	1.592	9.74	0.157
13'-6"	8'-2"	4'-0"	3'-2"	1'-2"	#8	6"	#6	6"	343.21	1.804	10.02	0.186
14'-6"	8'-10"	4'-5"	3'-5"	1'-4"	#9	6"	#6	6"	427.43	2.046	10.30	0.218
15'-6"	9'-6"	4'-10"	3'-8"	1'-6"	#9	6"	#7	6"	484.01	2.302	11.24	0.253
16'-0"	9'-11"	5'-0"	3'-11"	1'-7"	#9	6"	#7	6"	500.21	2.448	11.47	0.279

TABLE OF WINGWALL REINFORCING
(2~Wings)

Bar	Size	No.	Spa
D1	#5	~	1'-0"
D2	#5	~	1'-0"
E1	#4	~	1'-0"
F	#4	~	1'-0"
G	#5	~	1'-0"
M1	#4	4	~
P	#4	~	1'-0"
V	#4	~	1'-0"

TABLE OF TOEWALL REINFORCING

Bar	Size	No	Spa
J3	#4	~	1'-0"
M2	#4	2	~
E2	#4	~	1'-0"

WING DIMENSION CALCULATIONS:

Formulas: (All values are in Feet)

Hw = H + T + C

Lw = (Hw) (SL) ÷ Cosine (∈)

For Cast-in-place culverts:

Ltw = [(N) (S) + (N + 1) (U)] ÷ (Cosine ∈)

For Precast culverts:

Ltw = [(N) (2 U + S) + (N − 1) (0.5')] ÷ (Cosine ∈)

Total Wingwall Area (Two Wings ~ S.F.) = (2) (Hw) (Lw)

Hw = Height of Wingwall
Lw = Length of Wingwall
Ltw = Culvert Toewall Length
N = Number of Culvert Spans
SL: 1 = Channel Slope ratio. (Horizontal: 1 Vertical, Usual value is 2: 1)
∈ = Culvert Skew

See applicable box culvert standard for S, H, T and U values.

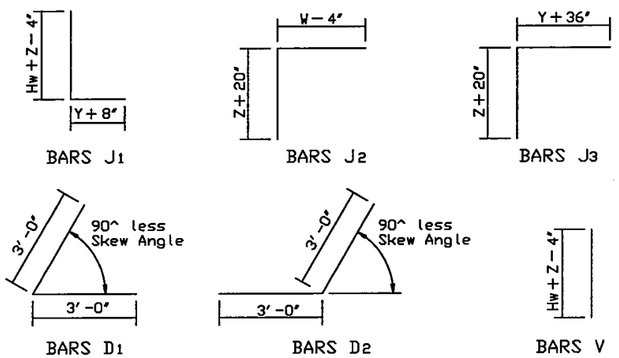

① Skew Angle = 0°
② At discharge end, chamfer may be 3/4 ".
③ For 15° Skew ~ 1'
For 30° Skew ~ 2'
For 45° Skew ~ 3'
④ Quantities shown are for two wings. To determine total quantities for two wings, multiply the tabulated values by Lw.
⑤ Provide weepholes for Hw = 5'-0" and greater. Fill around weepholes with coarse gravel.
⑥ Extend Bars E1 1'-6" minimum into the bottom slab of the culvert.
⑦ Lap Bars M1 1'-6" minimum with Bars M2.
⑧ Bars G shall be equally spaced at 1'-0" maximum, placed as shown. There shall be at least 4 Bars G per wing.
⑨ 0" min to 5'-0" max. For T6 or C6 Rail, see T6-CM standard for additional details. For all other rail types, refer to the RAC standard. For curbs without rail and greater than 1'-0" high, see ECD standard for additional details. Estimated curb heights are shown elsewhere in the plans.
⑩ For vehicle safety, the following requirements must be met:
- For structures without bridge rail, curbs shall project no more than 3" above finished grade.
- For structures with bridge rail, curbs shall be flush with finished grade.
Curb heights shall be reduced, if necessary, to meet the above requirements. No changes will be made in quantities and no additional compensation will be allowed for this work.
⑪ 1'-0" typical. 2'-0" typical when RAC standard is referenced elsewhere in the plans.

GENERAL NOTES:

Designed according to current AASHTO Standard and Interim Specifications.
All reinforcing steel shall be Grade 60.
All concrete shall be Class "C" and shall have a minimum compressive strength of 3600 psi.
All reinforcing bars shall be adjusted to provide a minimum of 1 1/4 " clear cover.
When structure is founded on solid rock, depth of toewalls for culverts and wingwalls may be reduced or eliminated as directed by the Engineer.
See BCS sheet for additional dimensions and information.
The quantities for concrete and reinforcing steel resulting from the formulas given on this sheet are for Contractor's information only.

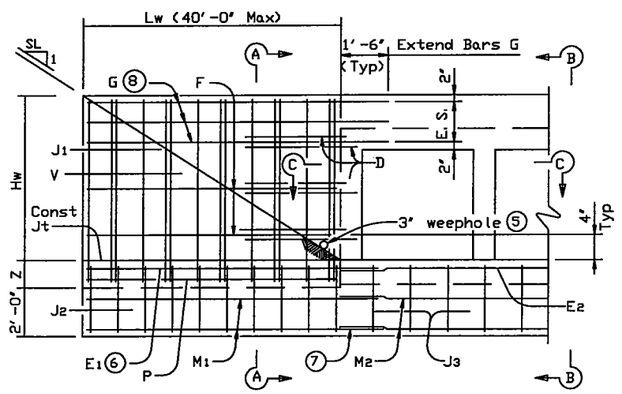

PARTIAL ELEVATION

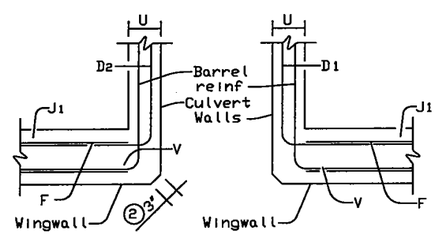

SECTION C-C

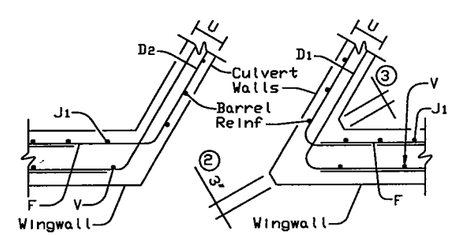

SECTION C-C

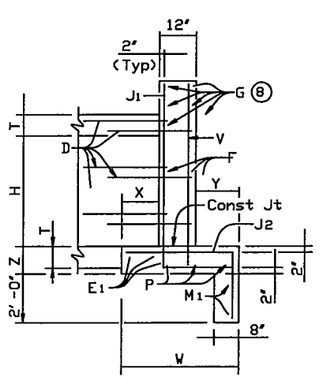

SECTION A-A
(Showing Wing Reinf)

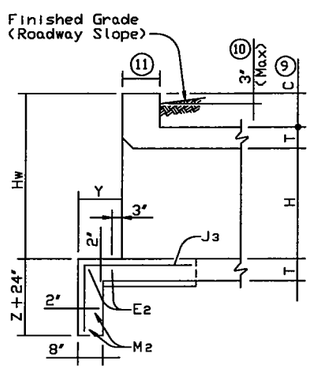

SECTION B-B
(Showing Toewall Reinf)

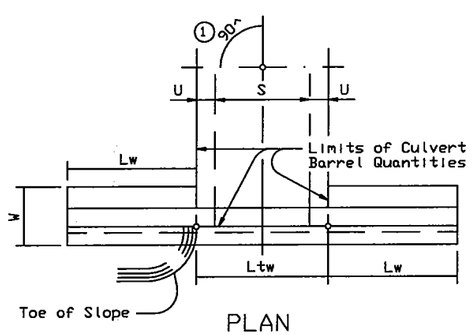

PLAN

DETAILS FOR NON-SKEWED BOX CULVERTS

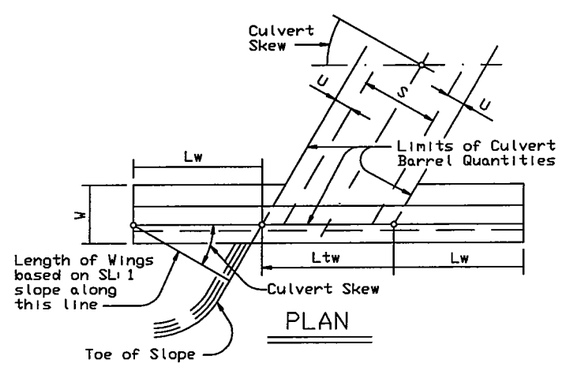

PLAN

DETAILS FOR SKEWED BOX CULVERTS
(Showing 30° Skew)

DISCLAIMER:
The use of this standard is governed by the "Texas Engineering Practice Act". No warranty of any kind is made by TxDOT for any purpose whatsoever. TxDOT assumes no responsibility for the conversion of this standard to other formats or for incorrect results or damages resulting from its use.

LEVELS DISPLAYED
1 2 3 4 5 6 7 8 9 10 11 12 13 14 15 16
17 18 19 20 21 22 23 24 25 26 27 28 29 30 31 32
33 34 35 36 37 38 39 40 41 42 43 44 45 46 47 48
49 50 51 52 53 54 55 56 57 58 59 60 61 62 63

ACC:

Texas Department of Transportation
Bridge Division

CONCRETE WINGWALLS WITH PARALLEL WINGS FOR FOR SKEWED AND NON-SKEWED BOX CULVERTS

PW

FILE: pwstde01.dgn	DN: GAF	CK: CAT	DW: TxDOT	CK: GAF
©TxDOT December 2003	DISTRICT	FEDERAL AID PROJECT		SHEET
REVISIONS				
	COUNTY	CONTROL	SECT	JOB	HIGHWAY

BOX DATA

SECTION DIMENSIONS S (ft)	H (ft)	T_T (in)	T_B (in)	T_S (in)	Fill Height (ft)	M (Min) (in)	REINFORCING (in^2/ft) ② A_{S1}	A_{S2}	A_{S3}	A_{S4}	A_{S7}	A_{S8}	A_{S5}	A_{S6}	① Lift Weight (Tons)	Governing ASTM Standard
5	3	8	7	6	< 2	–	0.22	0.41	0.22	0.14	0.19	0.17	0.19	0.19	6.6	C 850
5	3	6	6	6	2	23	0.26	0.28	0.23	0.14	–	–	–	–	5.7	C 789
5	3	6	6	6	3	21	0.17	0.18	0.18	0.14	–	–	–	–	5.7	C 789
5	3	6	6	6	4	21	0.14	0.15	0.15	0.14	–	–	–	–	5.7	C 789
5	3	6	6	6	5	20	0.14	0.14	0.15	0.14	–	–	–	–	5.7	C 789
5	3	6	6	6	6	20	0.14	0.15	0.15	0.14	–	–	–	–	5.7	C 789
5	3	6	6	6	8	20	0.14	0.16	0.16	0.14	–	–	–	–	5.7	C 789
5	3	6	6	6	10	20	0.15	0.18	0.19	0.14	–	–	–	–	5.7	C 789
5	3	6	6	6	12	20	0.17	0.20	0.21	0.14	–	–	–	–	5.7	C 789
5	3	6	6	6	14	20	0.19	0.23	0.23	0.14	–	–	–	–	5.7	C 789
5	3	6	6	6	16	19	0.21	0.26	0.26	0.14	–	–	–	–	5.7	C 789
5	3	6	6	6	18	19	0.23	0.28	0.29	0.14	–	–	–	–	5.7	C 789
5	4	8	7	6	< 2	–	0.19	0.44	0.24	0.14	0.19	0.17	0.21	0.19	7.2	C 850
5	4	6	6	6	2	28	0.23	0.32	0.27	0.14	–	–	–	–	6.3	C 789
5	4	6	6	6	3	23	0.15	0.20	0.21	0.14	–	–	–	–	6.3	C 789
5	4	6	6	6	6	22	0.14	0.16	0.17	0.14	–	–	–	–	6.3	C 789
5	4	6	6	6	8	20	0.14	0.17	0.18	0.14	–	–	–	–	6.3	C 789
5	4	6	6	6	10	20	0.14	0.20	0.21	0.14	–	–	–	–	6.3	C 789
5	4	6	6	6	12	20	0.14	0.22	0.23	0.14	–	–	–	–	6.3	C 789
5	4	6	6	6	14	20	0.16	0.25	0.26	0.14	–	–	–	–	6.3	C 789
5	4	6	6	6	16	19	0.18	0.28	0.29	0.14	–	–	–	–	6.3	C 789
5	4	6	6	6	18	19	0.20	0.31	0.31	0.14	–	–	–	–	6.3	C 789
5	5	8	7	6	< 2	–	0.16	0.46	0.26	0.14	0.19	0.17	0.22	0.19	7.8	C 850
5	5	6	6	6	2	41	0.20	0.35	0.29	0.14	–	–	–	–	6.9	C 789
5	5	6	6	6	3	29	0.14	0.22	0.23	0.14	–	–	–	–	6.9	C 789
5	5	6	6	6	4	25	0.14	0.18	0.19	0.14	–	–	–	–	6.9	C 789
5	5	6	6	6	5	24	0.14	0.17	0.18	0.14	–	–	–	–	6.9	C 789
5	5	6	6	6	6	22	0.14	0.17	0.18	0.14	–	–	–	–	6.9	C 789
5	5	6	6	6	8	22	0.14	0.18	0.19	0.14	–	–	–	–	6.9	C 789
5	5	6	6	6	10	21	0.14	0.21	0.22	0.14	–	–	–	–	6.9	C 789
5	5	6	6	6	12	21	0.14	0.23	0.24	0.14	–	–	–	–	6.9	C 789
5	5	6	6	6	14	21	0.14	0.26	0.27	0.14	–	–	–	–	6.9	C 789
5	5	6	6	6	16	21	0.16	0.29	0.30	0.14	–	–	–	–	6.9	C 789
5	5	6	6	6	18	20	0.17	0.32	0.33	0.14	–	–	–	–	6.9	C 789
5	2	8	7	6	< 2	–	0.24	0.33	0.25	0.14	0.19	0.17	0.19	0.19	6.0	C 850 ⑤
5	2	6	6	6	18	23	0.27	0.19	0.19	0.14	–	–	–	–	5.1	C 789 ⑤

① For Box Length = 8'-0"

② A_{S1} thru A_{S4}, A_{S7} and A_{S8} are minimum required areas of reinforcement per linear foot of box length. A_{S6} and A_{S5} are minimum required areas of reinforcement per linear foot of box width.

⑤ These designs were created by TxDOT and are not shown in the ASTM Specifications.

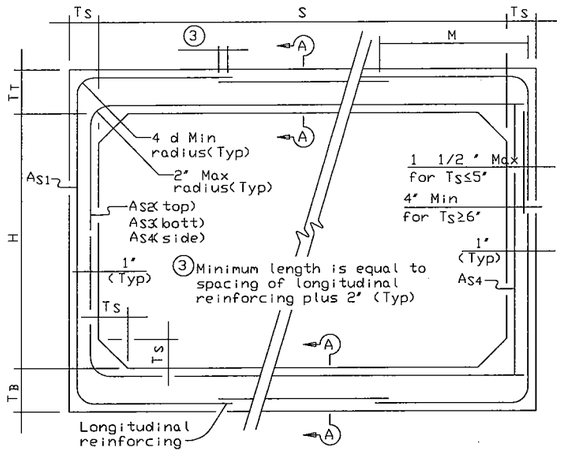

C789 CORNER OPTION "A"

C789 CORNER OPTION "B"

ASTM C789 STANDARD

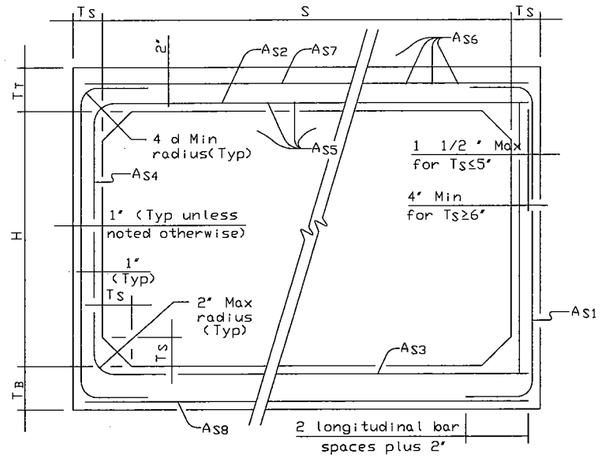

C850 CORNER OPTION "A"

C850 CORNER OPTION "B"

ASTM C850 STANDARD

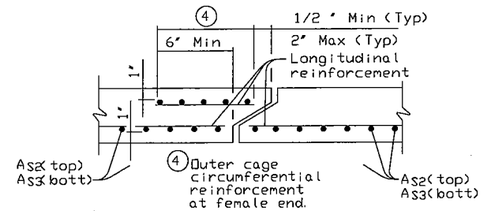

SECTION A-A

(TOP AND BOTTOM SLAB JOINT REINFORCEMENT)

GENERAL NOTES:

Designs shown conform to ASTM C789 or ASTM C850. Refer to ASTM C789 or ASTM C850 for information or details not shown.

For ASTM C789 designs, all reinforcing steel shall have a minimum specified yield stress of 65 ksi.

For ASTM C850 designs, all reinforcing steel shall have a minimum specified yield stress of 60 ksi.

All concrete shall be Class "H" Concrete with a minimum compressive strength of 5,000 psi.

See SCP-MD standard sheet for miscellaneous details and notes not shown.

Designed to the maximum fill height shown.

In lieu of furnishing the designs shown on this sheet, the contractor may furnish an alternate design that is equal to or exceeds the box design for the design fill height in the table. Shop plans for alternate designs shall be submitted in accordance with Item "Precast Concrete Structures".

HS20 LOADING

DISCLAIMER:
The use of this standard is governed by the "Texas Engineering Practice Act". No warranty of any kind is made by TxDOT for any purpose whatsoever. TxDOT assumes no responsibility for the conversion of this standard to other formats or for incorrect results or damages resulting from its use.

LEVELS DISPLAYED
1 2 3 4 5 6 7 8 9 10 11 12 13 14 15 16 17 18 19 20 21 22 23 24 25 26 27 28 29 30 31 32 33 34 35 36 37 38 39 40 41 42 43 44 45 46 47 48 49 50 51 52 53 54 55 56 57 58 59 60 61 62 63

ACC:

Texas Department of Transportation
Bridge Division

SINGLE BOX CULVERTS PRECAST

5'-0" SPAN

SCP-5

FILE: scp05ste.dgn	DN: GAF	CK: LMW	DW: BWH/TxDOT	CK: GAF
©TxDOT December 2003	DISTRICT	FEDERAL AID PROJECT		SHEET
REVISIONS	COUNTY		CONTROL / SECT / JOB	HIGHWAY

BOX DATA

SECTION DIMENSIONS S (ft)	H (ft)	T_T (in)	T_B (in)	T_S (in)	Fill Height (ft)	M (Min) (in)	REINFORCING (in^2/ft) ② A_{S1}	A_{S2}	A_{S3}	A_{S4}	A_{S7}	A_{S8}	A_{S5}	A_{S6}	① Lift Weight (Tons)	Governing ASTM Standard
6	3	8	7	7	< 2	-	0.30	0.42	0.21	0.17	0.19	0.17	0.19	0.19	7.9	C 850
6	3	7	7	7	2	29	0.30	0.29	0.22	0.17	-	-	-	-	7.5	C 789
6	3	7	7	7	3	24	0.21	0.19	0.18	0.17	-	-	-	-	7.5	C 789
6	3	7	7	7	4	24	0.18	0.17	0.17	0.17	-	-	-	-	7.5	C 789
6	3	7	7	7	5	24	0.17	0.17	0.17	0.17	-	-	-	-	7.5	C 789
6	3	7	7	7	6	23	0.17	0.17	0.17	0.17	-	-	-	-	7.5	C 789
6	3	7	7	7	8	23	0.17	0.18	0.18	0.17	-	-	-	-	7.5	C 789
6	3	7	7	7	10	23	0.20	0.20	0.21	0.17	-	-	-	-	7.5	C 789
6	3	7	7	7	12	23	0.23	0.23	0.24	0.17	-	-	-	-	7.5	C 789
6	3	7	7	7	14	23	0.26	0.26	0.26	0.17	-	-	-	-	7.5	C 789
6	3	7	7	7	16	23	0.28	0.29	0.29	0.17	-	-	-	-	7.5	C 789
6	3	7	7	7	18	23	0.31	0.32	0.32	0.17	-	-	-	-	7.5	C 789
6	4	8	7	7	< 2	-	0.26	0.46	0.24	0.17	0.19	0.17	0.20	0.19	8.6	C 850
6	4	7	7	7	2	28	0.26	0.33	0.26	0.17	-	-	-	-	8.2	C 789
6	4	7	7	7	3	25	0.18	0.22	0.21	0.17	-	-	-	-	8.2	C 789
6	4	7	7	7	4	24	0.17	0.19	0.19	0.17	-	-	-	-	8.2	C 789
6	4	7	7	7	5	23	0.17	0.18	0.19	0.17	-	-	-	-	8.2	C 789
6	4	7	7	7	6	23	0.17	0.18	0.19	0.17	-	-	-	-	8.2	C 789
6	4	7	7	7	8	23	0.17	0.20	0.21	0.17	-	-	-	-	8.2	C 789
6	4	7	7	7	10	22	0.18	0.23	0.24	0.17	-	-	-	-	8.2	C 789
6	4	7	7	7	12	22	0.20	0.26	0.26	0.17	-	-	-	-	8.2	C 789
6	4	7	7	7	14	22	0.22	0.29	0.30	0.17	-	-	-	-	8.2	C 789
6	4	7	7	7	16	22	0.24	0.32	0.33	0.17	-	-	-	-	8.2	C 789
6	4	7	7	7	18	22	0.27	0.35	0.36	0.17	-	-	-	-	8.2	C 789
6	5	8	7	7	< 2	-	0.23	0.48	0.26	0.17	0.19	0.17	0.21	0.19	9.3	C 850
6	5	7	7	7	2	33	0.24	0.36	0.29	0.17	-	-	-	-	8.9	C 789
6	5	7	7	7	3	27	0.17	0.24	0.23	0.17	-	-	-	-	8.9	C 789
6	5	7	7	7	6	25	0.17	0.20	0.21	0.17	-	-	-	-	8.9	C 789
6	5	7	7	7	8	23	0.17	0.21	0.22	0.17	-	-	-	-	8.9	C 789
6	5	7	7	7	10	23	0.17	0.24	0.25	0.17	-	-	-	-	8.9	C 789
6	5	7	7	7	12	23	0.17	0.27	0.29	0.17	-	-	-	-	8.9	C 789
6	5	7	7	7	14	23	0.19	0.31	0.32	0.17	-	-	-	-	8.9	C 789
6	5	7	7	7	16	22	0.21	0.34	0.35	0.17	-	-	-	-	8.9	C 789
6	5	7	7	7	18	22	0.23	0.37	0.39	0.17	-	-	-	-	8.9	C 789
6	6	8	7	7	< 2	-	0.20	0.51	0.29	0.17	0.19	0.17	0.22	0.19	10.0	C 850
6	6	7	7	7	2	48	0.22	0.39	0.31	0.17	-	-	-	-	9.6	C 789
6	6	7	7	7	3	33	0.17	0.26	0.25	0.17	-	-	-	-	9.6	C 789
6	6	7	7	7	4	29	0.17	0.22	0.23	0.17	-	-	-	-	9.6	C 789
6	6	7	7	7	5	27	0.17	0.21	0.22	0.17	-	-	-	-	9.6	C 789
6	6	7	7	7	6	26	0.17	0.21	0.22	0.17	-	-	-	-	9.6	C 789
6	6	7	7	7	8	25	0.17	0.22	0.24	0.17	-	-	-	-	9.6	C 789
6	6	7	7	7	10	24	0.17	0.25	0.27	0.17	-	-	-	-	9.6	C 789
6	6	7	7	7	12	24	0.17	0.28	0.30	0.17	-	-	-	-	9.6	C 789
6	6	7	7	7	14	24	0.17	0.32	0.33	0.17	-	-	-	-	9.6	C 789
6	6	7	7	7	16	24	0.19	0.35	0.37	0.17	-	-	-	-	9.6	C 789
6	6	7	7	7	18	23	0.21	0.38	0.40	0.17	-	-	-	-	9.6	C 789

① For Box Length = 8'-0"

② A_{S1} thru A_{S4}, A_{S7} and A_{S8} are minimum required areas of reinforcement per linear foot of box length. A_{S6} and A_{S5} are minimum required areas of reinforcement per linear foot of box width.

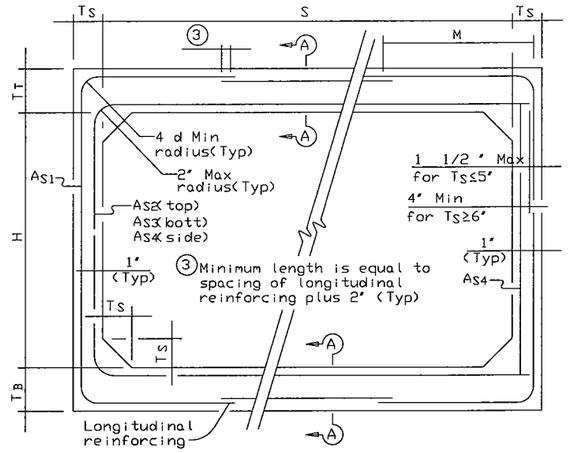

C789 CORNER OPTION "A"

C789 CORNER OPTION "B"

ASTM C789 STANDARD

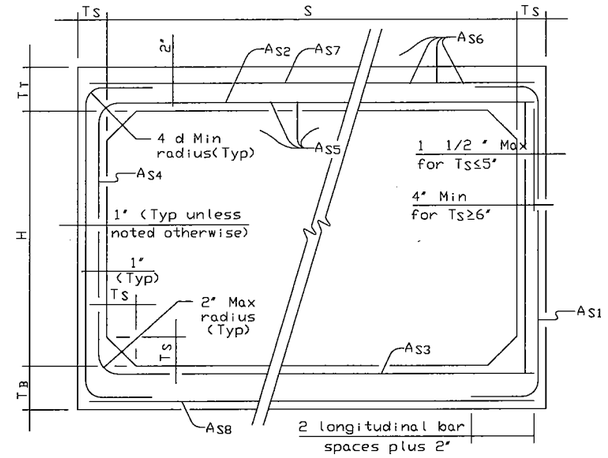

C850 CORNER OPTION "A"

C850 CORNER OPTION "B"

ASTM C850 STANDARD

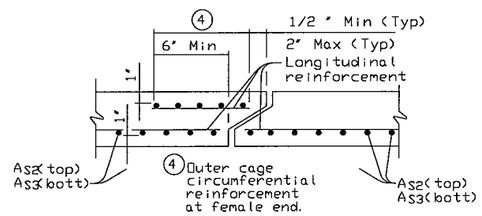

SECTION A-A

(TOP AND BOTTOM SLAB JOINT REINFORCEMENT)

GENERAL NOTES:

Designs shown conform to ASTM C789 or ASTM C850. Refer to ASTM C789 or ASTM C850 for information or details not shown.

For ASTM C789 designs, all reinforcing steel shall have a minimum specified yield stress of 65 ksi.

For ASTM C850 designs, all reinforcing steel shall have a minimum specified yield stress of 60 ksi.

All concrete shall be Class 'H' Concrete with a minimum 28 day compressive strength of 5,000 psi.

See SCP-MD standard sheet for miscellaneous details and notes not shown.

Designed to the maximum fill height shown.

In lieu of furnishing the designs shown on this sheet, the contractor may furnish an alternate design that is equal to or exceeds the box design for the design fill height in the table. Shop plans for alternate designs shall be submitted in accordance with Item "Precast Concrete Structures".

HS20 LOADING

Texas Department of Transportation
Bridge Division

SINGLE BOX CULVERTS PRECAST

6'-0" SPAN

SCP-6

FILE: scp06ste.dgn	DN: GAF	CK: LMW	DW: BVH/TxDOT	CK: GAF
©TxDOT December 2003	DISTRICT	FEDERAL AID PROJECT		SHEET
REVISIONS	COUNTY		CONTROL / SECT / JOB	HIGHWAY

DISCLAIMER:
The use of this standard is governed by the "Texas Engineering Practice Act". No warranty of any kind is made by TxDOT for any purpose whatsoever. TxDOT assumes no responsibility for the conversion of this standard to other formats or for incorrect results or damages resulting from its use.

LEVELS DISPLAYED
1 2 3 4 5 6 7 8 9 10 11 12 13 14 15 16
1 7 8 1 9 2 0 2 1 2 2 2 3 2 4 2 5 2 6 2 7 2 8 2 9 3 0 3 1 3 2
0 3 8 4 9 5 6 6 7 7 8 8 9 4 0 4 1 4 2 4 3 4 4 4 5 4 6 4 7 4 8
4 9 5 0 5 1 5 2 5 3 5 4 5 5 5 6 5 7 5 8 5 9 6 0 6 1 6 2 6 3
ACC:

BOX DATA

SECTION DIMENSIONS S (ft)	H (ft)	T_T (in)	T_B (in)	T_S (in)	Fill Height (ft)	M (Min) (in)	REINFORCING (in²/ft) ② A_{S1}	A_{S2}	A_{S3}	A_{S4}	A_{S7}	A_{S8}	A_{S5}	A_{S6}	① Lift Weight (Tons)	Governing ASTM Standard
8	4	8	8	8	< 2	-	0.37	0.51	0.27	0.19	0.19	0.19	0.19	0.19	11.2	C 850
8	4	8	8	8	2	34	0.37	0.40	0.29	0.19	-	-	-	-	11.2	C 789
8	4	8	8	8	3	31	0.27	0.28	0.24	0.19	-	-	-	-	11.2	C 789
8	4	8	8	8	4	28	0.25	0.25	0.24	0.19	-	-	-	-	11.2	C 789
8	4	8	8	8	5	28	0.26	0.25	0.26	0.19	-	-	-	-	11.2	C 789
8	4	8	8	8	6	28	0.26	0.26	0.26	0.19	-	-	-	-	11.2	C 789
8	4	8	8	8	8	27	0.28	0.28	0.29	0.19	-	-	-	-	11.2	C 789
8	4	8	8	8	10	27	0.32	0.32	0.33	0.19	-	-	-	-	11.2	C 789
8	4	8	8	8	12	27	0.36	0.36	0.37	0.19	-	-	-	-	11.2	C 789
8	4	8	8	8	14	27	0.40	0.41	0.42	0.19	-	-	-	-	11.2	C 789
8	5	8	8	8	< 2	-	0.34	0.53	0.30	0.19	0.19	0.19	0.20	0.19	12.0	C 850
8	5	8	8	8	2	35	0.34	0.43	0.32	0.19	-	-	-	-	12.0	C 789
8	5	8	8	8	3	31	0.25	0.31	0.27	0.19	-	-	-	-	12.0	C 789
8	5	8	8	8	4	28	0.23	0.27	0.27	0.19	-	-	-	-	12.0	C 789
8	5	8	8	8	5	28	0.24	0.27	0.29	0.19	-	-	-	-	12.0	C 789
8	5	8	8	8	6	27	0.24	0.28	0.29	0.19	-	-	-	-	12.0	C 789
8	5	8	8	8	8	27	0.26	0.30	0.32	0.19	-	-	-	-	12.0	C 789
8	5	8	8	8	10	27	0.29	0.35	0.36	0.19	-	-	-	-	12.0	C 789
8	5	8	8	8	12	27	0.32	0.39	0.41	0.19	-	-	-	-	12.0	C 789
8	6	8	8	8	< 2	-	0.32	0.56	0.33	0.19	0.25	0.19	0.21	0.19	12.8	C 850
8	6	8	8	8	2	36	0.31	0.46	0.35	0.19	-	-	-	-	12.8	C 789
8	6	8	8	8	3	31	0.23	0.33	0.29	0.19	-	-	-	-	12.8	C 789
8	6	8	8	8	4	30	0.22	0.29	0.29	0.19	-	-	-	-	12.8	C 789
8	6	8	8	8	5	29	0.23	0.29	0.31	0.19	-	-	-	-	12.8	C 789
8	6	8	8	8	6	28	0.22	0.30	0.31	0.19	-	-	-	-	12.8	C 789
8	6	8	8	8	8	27	0.24	0.32	0.34	0.19	-	-	-	-	12.8	C 789
8	6	8	8	8	10	27	0.27	0.37	0.39	0.19	-	-	-	-	12.8	C 789
8	6	8	8	8	12	27	0.30	0.42	0.43	0.19	-	-	-	-	12.8	C 789
8	7	8	8	8	< 2	-	0.30	0.58	0.35	0.19	0.27	0.22	0.22	0.19	13.6	C 850
8	7	8	8	8	2	41	0.28	0.49	0.38	0.19	-	-	-	-	13.6	C 789
8	7	8	8	8	3	35	0.22	0.35	0.32	0.19	-	-	-	-	13.6	C 789
8	7	8	8	8	4	32	0.20	0.31	0.31	0.19	-	-	-	-	13.6	C 789
8	7	8	8	8	5	31	0.21	0.31	0.33	0.19	-	-	-	-	13.6	C 789
8	7	8	8	8	6	30	0.21	0.31	0.34	0.19	-	-	-	-	13.6	C 789
8	7	8	8	8	8	29	0.22	0.34	0.36	0.19	-	-	-	-	13.6	C 789
8	7	8	8	8	10	28	0.25	0.38	0.41	0.19	-	-	-	-	13.6	C 789
8	7	8	8	8	12	28	0.28	0.43	0.46	0.19	-	-	-	-	13.6	C 789
8	8	8	8	8	< 2	-	0.28	0.60	0.38	0.23	0.29	0.26	0.22	0.19	14.4	C 850
8	8	8	8	8	2	61	0.26	0.51	0.40	0.19	-	-	-	-	14.4	C 789
8	8	8	8	8	3	41	0.20	0.37	0.34	0.19	-	-	-	-	14.4	C 789
8	8	8	8	8	4	36	0.19	0.32	0.33	0.19	-	-	-	-	14.4	C 789
8	8	8	8	8	5	34	0.20	0.32	0.35	0.19	-	-	-	-	14.4	C 789
8	8	8	8	8	6	32	0.20	0.33	0.36	0.19	-	-	-	-	14.4	C 789
8	8	8	8	8	8	31	0.21	0.35	0.38	0.19	-	-	-	-	14.4	C 789
8	8	8	8	8	10	30	0.23	0.40	0.43	0.19	-	-	-	-	14.4	C 789
8	8	8	8	8	12	29	0.26	0.44	0.48	0.19	-	-	-	-	14.4	C 789

① For Box Length = 8'-0"

② A_{S1} thru A_{S4}, A_{S7} and A_{S8} are minimum required areas of reinforcement per linear foot of box length. A_{S6} and A_{S5} are minimum required areas of reinforcement per linear foot of box width.

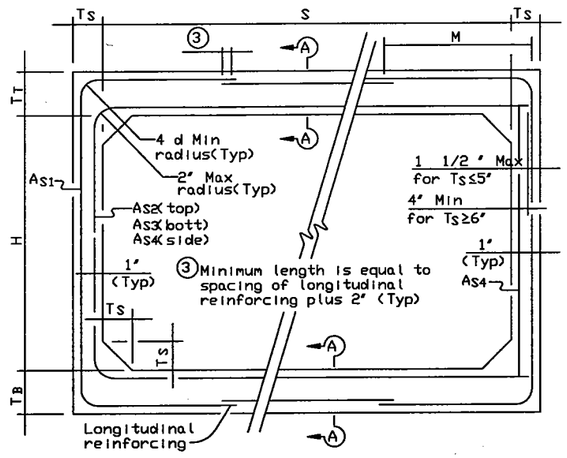

C789 CORNER OPTION 'A'

C789 CORNER OPTION 'B'

ASTM C789 STANDARD

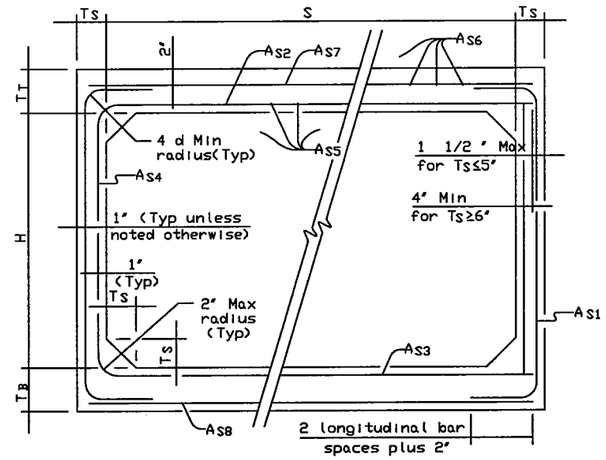

C850 CORNER OPTION 'A'

C850 CORNER OPTION 'B'

ASTM C850 STANDARD

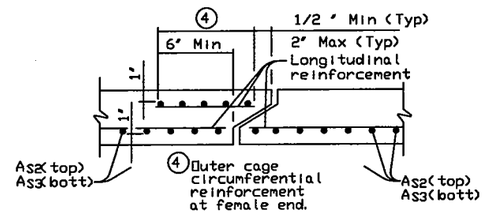

SECTION A-A

(TOP AND BOTTOM SLAB JOINT REINFORCEMENT)

GENERAL NOTES:

Designs shown conform to ASTM C789 or ASTM C850. Refer to ASTM C789 or ASTM C850 for information or details not shown.

For ASTM C789 designs, all reinforcing steel shall have a minimum specified yield stress of 65 ksi.

For ASTM C850 designs, all reinforcing steel shall have a minimum specified yield stress of 60 ksi.

All concrete shall be Class 'H' Concrete with a minimum compressive strength of 5,000 psi.

See SCP-MD standard sheet for miscellaneous details and notes not shown.

Designed to the maximum fill height shown.

In lieu of furnishing the designs shown on this sheet, the contractor may furnish an alternate design that is equal to or exceeds the box design for the design fill height in the table. Shop plans for alternate designs shall be submitted in accordance with Item 'Precast Concrete Structures'.

HS20 LOADING

Texas Department of Transportation
Bridge Division

SINGLE BOX CULVERTS PRECAST

8'-0" SPAN

SCP-8

FILE: scp08ste.dgn	DN: GAF	CK: LMW	DW: BWH/TxDOT	CK: GAF
©TxDOT December 2003	DISTRICT	FEDERAL AID PROJECT		SHEET
REVISIONS	COUNTY	CONTROL	SECT	JOB	HIGHWAY

C70

DISCLAIMER:
The use of this standard is governed by the "Texas Engineering Practice Act". No warranty of any kind is made by TxDOT for any purpose whatsoever. TxDOT assumes no responsibility for the conversion of this standard to other formats or for incorrect results or damages resulting from its use.

LEVELS DISPLAYED
1 2 3 4 5 6 7 8 9 10 11 12 13 14 15 16
7 18 19 20 21 22 23 24 25 26 27 28 29 30 31 32
33 34 35 36 37 38 39 40 41 42 43 44 45 46 47 48
49 50 51 52 53 54 55 56 57 58 59 60 61 62 63

ACC:

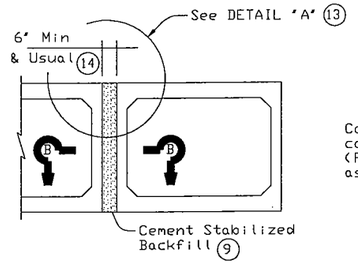

MULTIPLE UNIT PLACEMENT

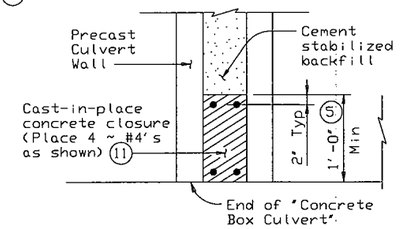

SECTION B-B

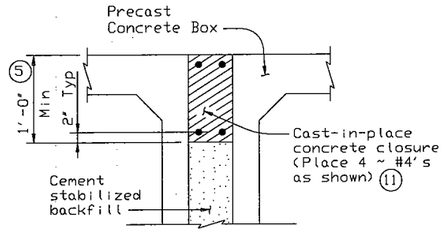

DETAIL "A" (13)

(Wall closure detail for multiple units subject to direct traffic)

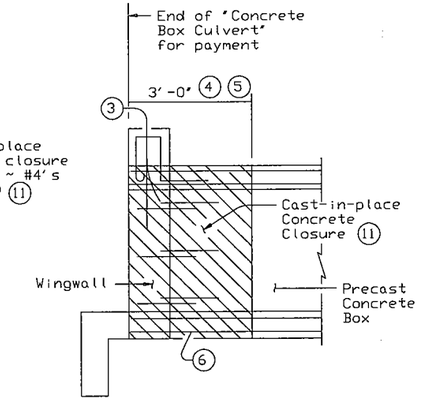

WINGWALL CONNECTION

(Also applies to Safety End Treatment)

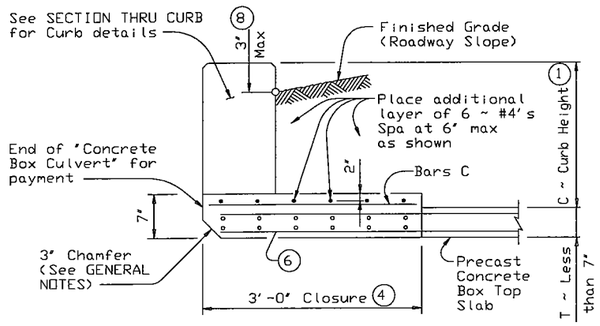

SECTION THRU TOP SLABS LESS THAN 7"

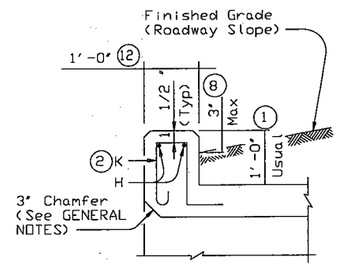

SECTION THRU CURB

(10) QUANTITIES PER FOOT OF CURB	
Reinforcing Steel	4.18 Lb
Concrete	0.037 CY

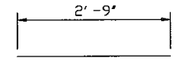

BARS C ~ #4
(Spa = 1'-0" Max)

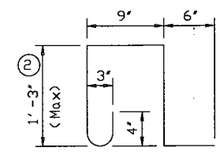

BARS K ~ #4
(Spa = 1'-0" Max)
(Length = 4'-3")

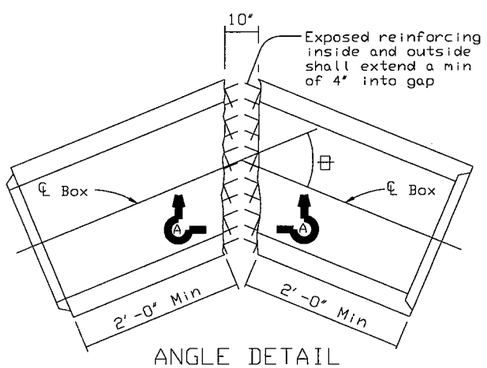

ANGLE DETAIL

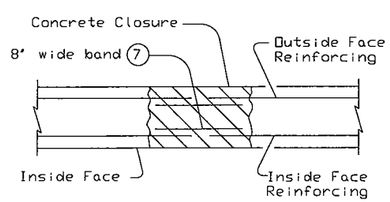

SECTION A-A

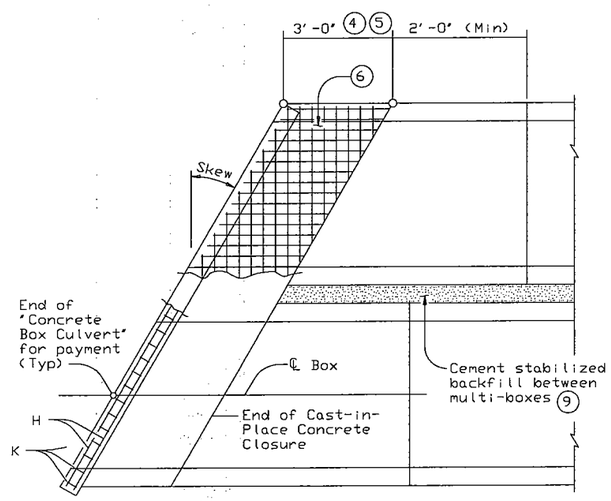

PLAN OF SKEWED ENDS

(Showing multi-box placement)

(1) 0" min to 5'-0" max. Estimated curb heights are shown elsewhere in the plans. For structures without railing and curbs taller than 1'-0", refer to ECD standard. For structures with T6 bridge rail, refer to T6-CM standard. For structures with bridge rail, other than T6, refer to RAC standard.

(2) For curbs less than 1'-0" high, tilt Bars K or reduce bar height as necessary to maintain cover. For curbs less than 3" high, Bars K may be omitted.

(3) Curb, Wingwall or Safety End Treatment reinforcing shall extend into concrete closure. Any reinforcing that does not fit into the closure shall be bent or trimmed as necessary.

(4) Cast-in-place concrete closure shall be 3'-0" min. Boxes shall be cast short or broken back in the field. All reinforcing in the closure shall be the same size and spacing as in the precast box section. Except where shown otherwise, the cast-in-place closure shall be flush with the inside and outside faces of the precast box section.

(5) For multiple unit placements the length of the closure for the interior walls may be adjusted as necessary. The length of the top slab, bottom slab, and exterior wall closure shall not be less than 3'-0". See Section B-B detail when interior walls are cast full length.

(6) Precast box reinforcing shall extend a minimum of 2'-9" into concrete closure (Typ).

(7) Bands of reinforcing matching the inside and outside face reinforcing shall be placed in the gaps of the top and bottom slabs. A band matching the outside face reinforcing of the wall shall be placed in the gaps of the walls (placed in the outside face only). The bands shall be tack welded to the exposed reinforcing at each point of contact.

(8) For vehicle safety, the following requirements must be met:
- For structures without bridge rail, curbs shall project no more than 3" above finished grade.
- For structures with bridge rail, curbs shall be flush with finished grade.

Curb heights shall be reduced, if necessary, to meet the above requirements. No changes will be made in quantities and no additional compensation will be allowed for this work.

(9) Cement Stabilized Backfill between boxes is considered part of the Box Culvert for payment.

(10) All curb concrete and reinforcing is considered part of the Box Culvert for payment.

(11) Any additional concrete and reinforcing required for the closures shall be considered as subsidiary to the Concrete Box Culvert.

(12) 1'-0" typical. 2'-0" when RAC standard is referred to elsewhere in the plans.

(13) For multiple unit placement with overlay, with 1 to 2 course surface treatment, or with the top slab as the final riding surface, provide wall closure as shown in DETAIL 'A'.

(14) This dimension may be increased with approval of the Engineer to allow the precast boxes to be tunneled or jacked in accordance with Item 476, "Jacking, Boring, or Tunneling Pipe or Box". No payment will be made for any additional material in the gap between adjacent boxes.

GENERAL NOTES:

Designed according to current AASHTO Standard and Interim Specifications.

All closure concrete shall be Class 'C' with a minimum compressive strength of 3600 psi and shall be placed according to the Item, 'Concrete Structures'.

Any additional concrete required for the closures shall be considered as subsidiary to the Concrete Box Culvert.

Refer to the Single Box Culverts Precast standard for details not shown.

The bottom edge of the top slab closure shall be chamfered 3 inches at the entrance.

HS20 LOADING

DISCLAIMER:
The use of this standard is governed by the "Texas Engineering Practice Act". No warranty of any kind is made by TxDOT for any purpose whatsoever. TxDOT assumes no responsibility for the conversion of this standard to other formats or for incorrect results or damages resulting from its use.

LEVELS DISPLAYED
1 2 3 4 5 6 7 8 9 10 11 12 13 14 15 16
17 18 19 20 21 22 23 24 25 26 27 28 29 30 31 32
33 34 35 36 37 38 39 40 41 42 43 44 45 46 47 48
49 50 51 52 53 54 55 56 57 58 59 60 61 62 63

ACC:

Texas Department of Transportation
Bridge Division

BOX CULVERTS PRECAST MISCELLANEOUS DETAILS

SCP-MD

FILE: scpmdste.dgn	DN: GAF	CK: LMW	DW: BVH/TxDOT	CK: GAF
©TxDOT December 2003	DISTRICT	FEDERAL AID PROJECT		SHEET
REVISIONS				
	COUNTY	CONTROL	SECT	JOB	HIGHWAY

Note: Bridge rail must be attached to a metal beam guard fence transition section (nested W-beam) which then attaches to a metal beam guard fence and extends along the embankment unless shown otherwise on the plans. See plan sheet for details and length for payment. The splice joining the approach guard fence transition to the bridge rail shall be a regular splice.

Note: Do not provide a tube splice in first section unless it crosses an expansion armor joint.

Note: Expansion splice in W-Beam shall be made at either the first or second post either side of Exp Armor Joint. When splice is made at second post, an Exp Slot shall be provided in W-Beam for connection to to first post to allow for movement.

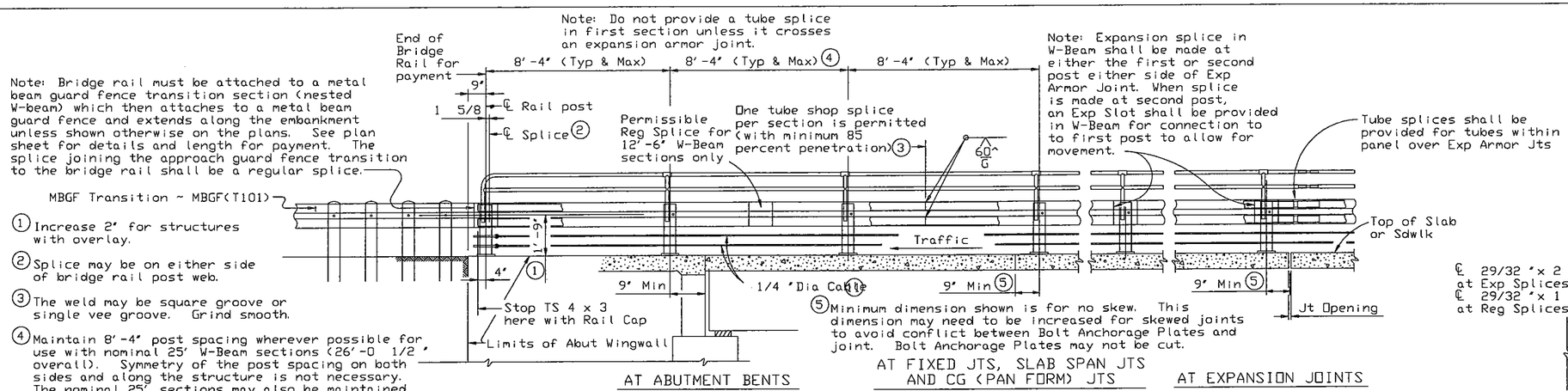

INSIDE ELEVATION OF RAIL

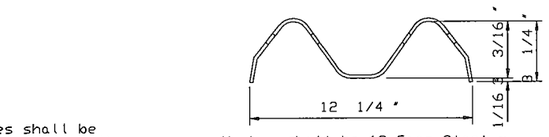

Member shall be 12 Gage Steel ~ Nom thickness = 0.1046" exclusive of protective coating. Actual section may vary slightly with the manufacturer and conforms to AASHTO M-180.

SECTION

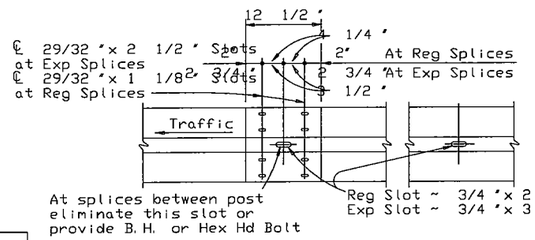

Note: Provide 5/8" Dia Button Head Shoulder Bolts or Hex Head Bolts with Hex Nuts at all splice slots

SPLICE POST CONN

W-BEAM DETAILS

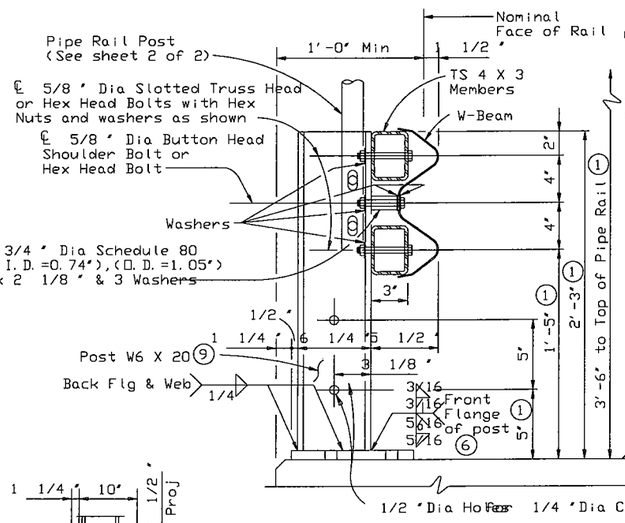

SECTION THRU RAIL

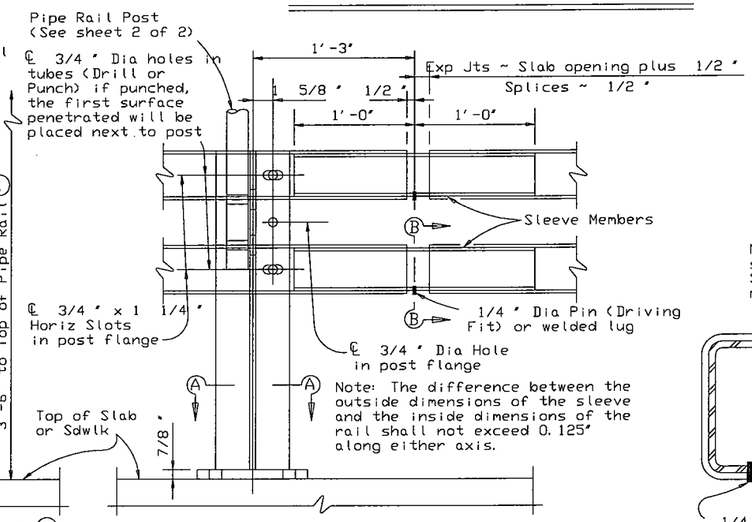

TUBE SPLICE DETAILS

TUBE & SLEEVE MEMBERS		
TS 4 X 3		Sleeve Thickness
Material	Thickness	Material ~ A36
A 500 Grade C	0.188"	0.188"
A 500 Grade B	0.250"	0.250"
A 500 Grade A or A 501	0.313"	0.250"

Note: Other sections of equal or greater strength are acceptable for sleeves. See Sheet 2 of 2 for Pipe Rail material specifications.

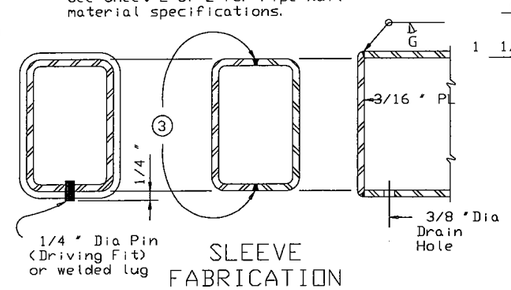

SECTION B-B SLEEVE FABRICATION OPTION RAIL CAP

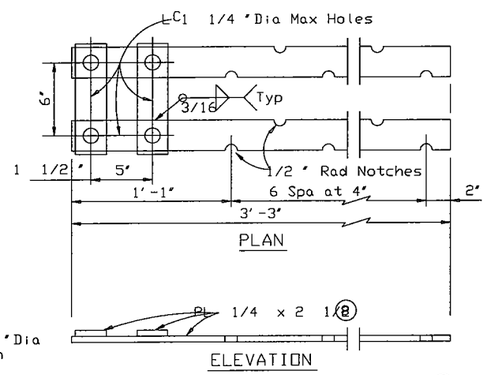

BOLT ANCHORAGE PLATES 10

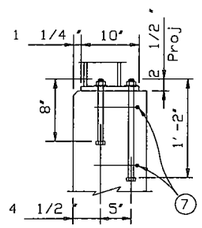

ON ABUT WINGWALL OR CIP RETAINING WALL

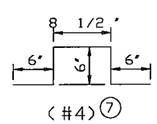

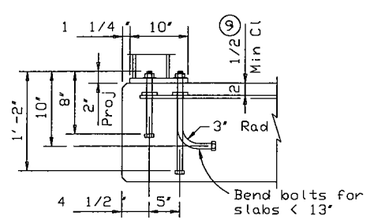

ON SLAB DEPTH GREATER THAN 10"

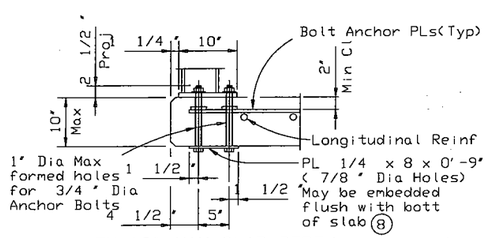

ON 10" MAX SLAB DEPTH

POST MOUNTING DETAILS

6 In lieu of front Flg weld shown, a 3/8" fillet weld all around including edges of flange may be used.

7 Adjust horizontal reinforcing as necessary and place two #4 bars around anchor bolts. These bars are to be considered subsidiary to Rail.

8 All steel posts and plates shall be ASTM A36.

9 Set plates under longitudinal reinforcing if necessary.

10 Install one anchorage plate assembly in slab at each rail post. Do not galvanize or oil this assembly. Bolt Anchorage Plates may not be cut.

11 Extend two 1/4" Dia steel cables thru all posts. Attach at end posts with turnbuckles and tension until taut. For long structures additional turnbuckles may be required, as directed by the Engineer, to prevent excessive sag in the cables.

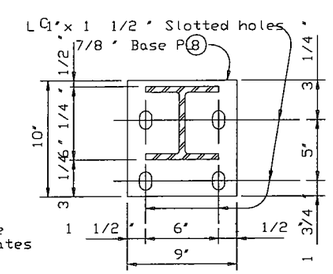

SECTION A-A

The use of this railing is restricted to design speeds of 45 mph or less.

SHEET 1 OF 2

Texas Department of Transportation
Bridge Division

COMBINATION RAIL

TYPE C101

FILE: rlstde26.dgn	DN: JJP	CK: TxDOT	DW: JTR	CK: DWM
©TxDOT February 2003	DISTRICT	FEDERAL AID PROJECT		SHEET
REVISIONS	COUNTY		CONTROL SECT JOB	HIGHWAY

DISCLAIMER:
The use of this standard is governed by the "Texas Engineering Practice Act". No warranty of any kind is made by TxDOT for any purpose whatsoever. TxDOT assumes no responsibility for the conversion of this standard to other formats or for incorrect results or damages resulting from its use.

LEVELS DISPLAYED ACC:

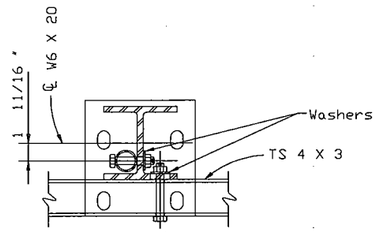

SECTION THRU POST

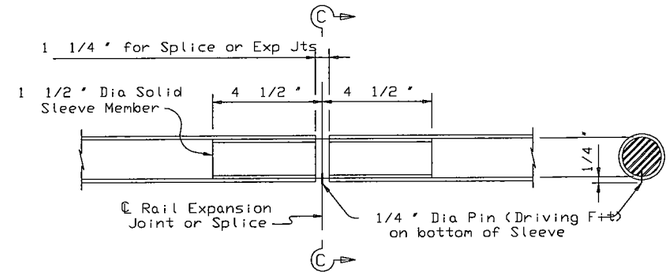

AT SPLICE OR EXP JTS

SECTION C-C

PIPE SPLICE DETAILS

(Splices may be at any location)

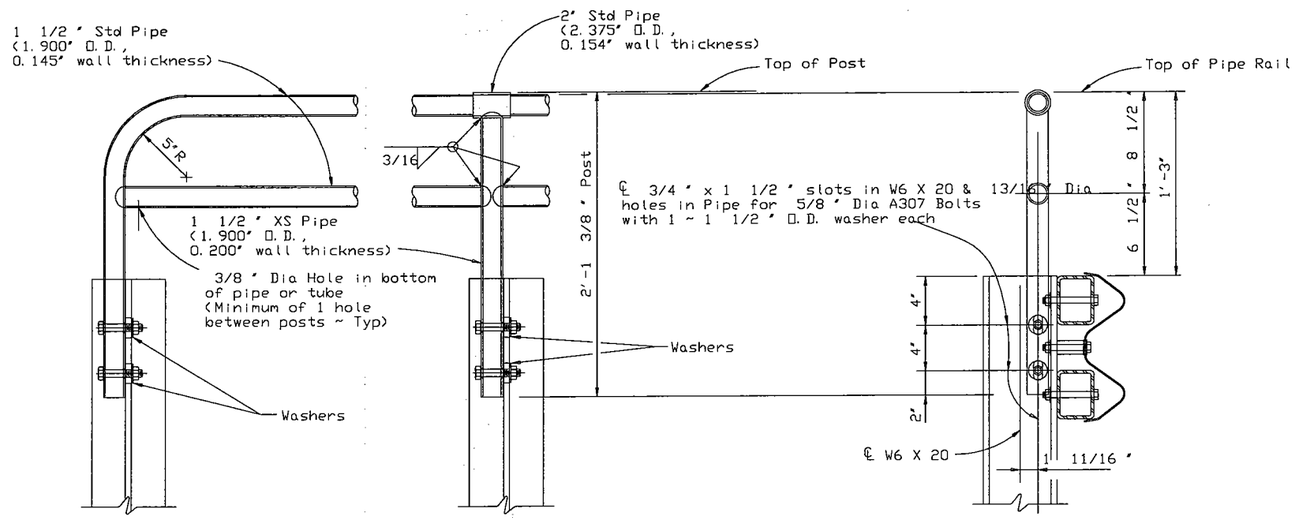

ELEVATION
FIRST STEEL POST

ELEVATION
LINE POST

SECTION THRU RAIL

(Front Flange of W6 x 20 omitted for clarity)

PIPE RAIL DETAILS

GENERAL NOTES:

This rail, without the pipe rail, was evaluated based on the results of previous crash tests and approved for a NCHRP Report 350 TL-3 rating. However, its use is limited to design speeds of 45 mph or less because the pipe rail presents an occupant compartment intrusion threat to high speed vehicular traffic.

Section lengths of TS 4 x 3 members shall be attached continuously to a minimum of three posts (except at abutments with expansion joints).

Face of rail and posts shall be vertical transversely unless otherwise approved by the Engineer. Posts shall be perpendicular to adjacent roadway grade. Grout may be used under base plates if necessary.

Exposed edges of pipe rails and pipe posts shall be rounded or chamfered to approximately 1/16 " by grinding.

All W-beam, tubing, I-beam, pipe, bolts, nuts, washers, cable and connectors, plates and bottom plates are considered as parts of the rail for payment.

All steel components shall be galvanized unless otherwise shown in plans.

Pipe for pipe rail shall conform to ASTM A53 Grade B or A501.

At expansion slots in W-beam rail, tighten bolts snugly.

Anchor bolts shall be 3/4 " Dia ASTM A325 bolts (or A321 threaded rods with one tack welded hex nut each) with one hex nut and one 2" O.D. washer (0.153" Min thick) plus one 1 1/2 " O.D. hardened steel washer (0.122" Min thick) at each bolt. Optionally use rectangular 3/8 x 2 x 0'-3" A36 plate with 13/16 " Dia hole. Threaded rods may be 0.670" minimum diameter with rolled threads. Nuts shall conform to A563 requirements. The untapped blanks shall be galvanized prior to cutting the threads. Threads for bolts and nuts shall have Class 2A and 2B fit tolerances in accordance with ANSI B1.1.

Shop drawings to be submitted to the Bridge Engineer for approval will be required only for rails on horizontal curves as follows, in which case the rail members shall be fabricated to the required radius: Deep Beam ~ 150' or less, 4"x 3" Tubes ~ 600' or less, Pipe Rail ~ 600' or less. For rails not requiring shop drawings, erection drawings showing section lengths, splice locations, rail post spacing and anchor bolt setting shall be submitted to the Area Engineer for approval.

Shop drawings may be submitted as 11"x 17" prints provided they are clearly legible.

This rail requires a min slab thickness of 8" and is not recommended for use with Box Beam or Double-T Structures with asphalt overlay.

Average weight of railing with no overlay and with 0.25" tubes is 45 plf.

DISCLAIMER:
The use of this standard is governed by the "Texas Engineering Practice Act". No warranty of any kind is made by TxDOT for any purpose whatsoever. TxDOT assumes no responsibility for the conversion of this standard to other formats or for incorrect results or damages resulting from its use.

LEVELS DISPLAYED
1 2 3 4 5 6 7 8 9 10 11 12 13 14 15 16
17 18 19 20 21 22 23 24 25 26 27 28 29 30 31 32
33 34 35 36 37 38 39 40 41 42 43 44 45 46 47 48
49 50 51 52 53 54 55 56 57 58 59 60 61 62 63
ACC:

SHEET 2 OF 2

Texas Department of Transportation
Bridge Division

COMBINATION RAIL

TYPE C101

FILE: rlstde26.dgn	DN: JJP	CK: TxDOT	DW: JTR	CK: DWM	
©TxDOT February 2003	DISTRICT	FEDERAL AID PROJECT			SHEET
REVISIONS	COUNTY		CONTROL	SECT	JOB	HIGHWAY

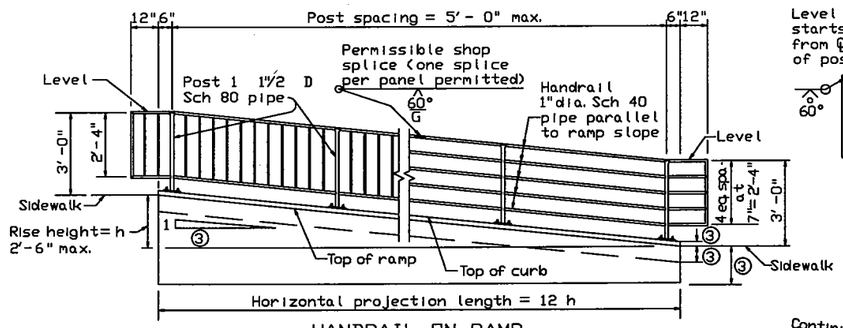

HANDRAIL ON RAMP

(Used where ramp or sidewalk is more than 2'-6" above adjacent surface.)

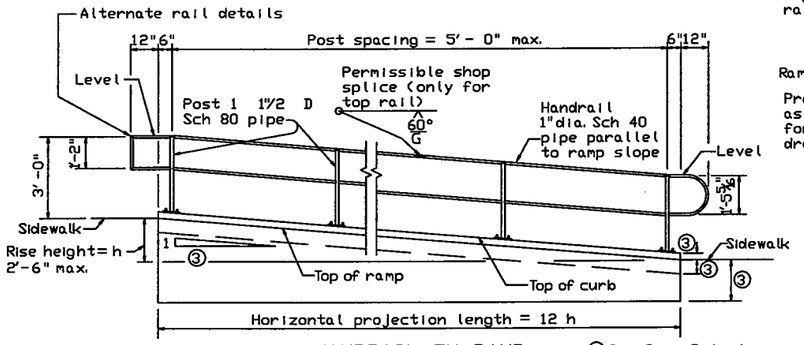

HANDRAIL ON RAMP

(Used in single-level ramp or lowest part in multi-level ramp.)

③ See Ramp Details, located elsewhere in plans, for ramp slope and dimensions.

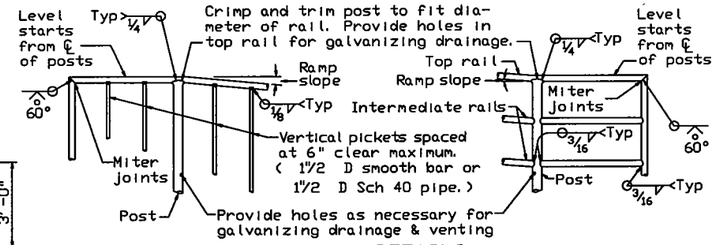

RAIL DETAILS

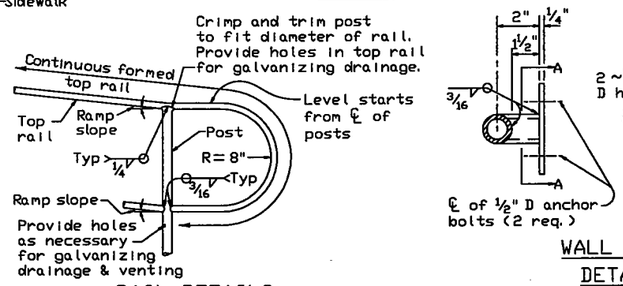

RAIL DETAILS

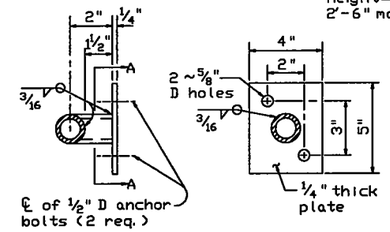

WALL MOUNT DETAILS

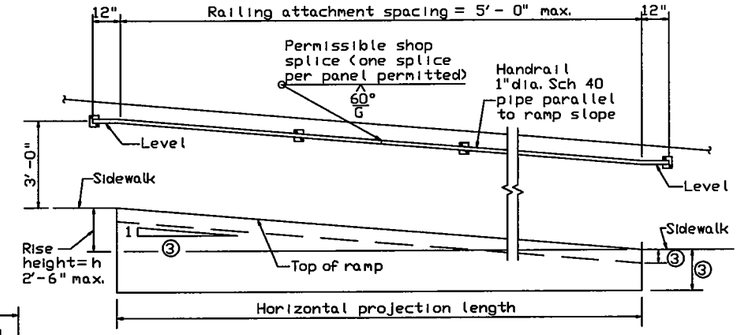

HANDRAIL ON WALL

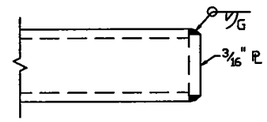

PIPE END DETAILS

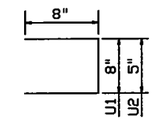

BARS U (■4)

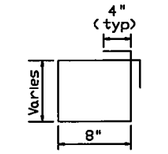

BARS S (■4)

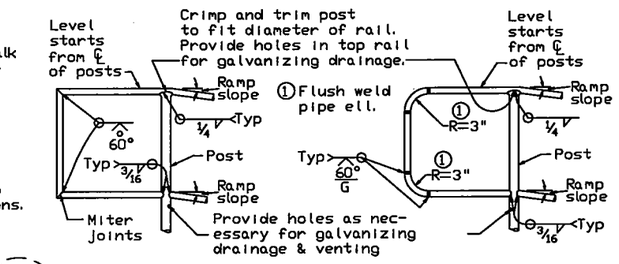

ALTERNATE RAIL DETAILS

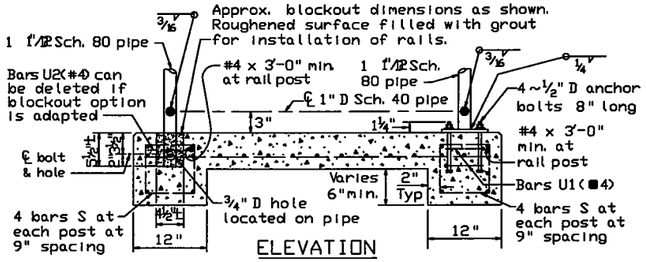

ELEVATION

Rail posts, may be cast into sidewalk or anchored in blockout after sidewalk concrete has cured.

OPTIONAL RAIL POST WITHOUT CURB

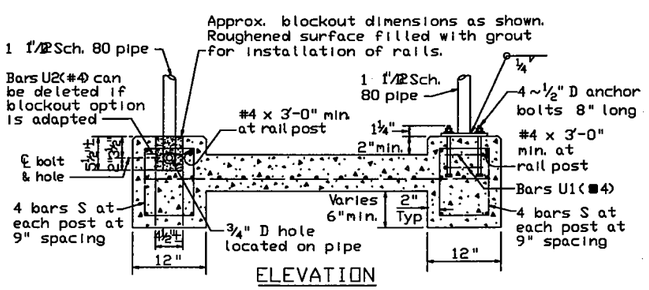

ELEVATION

Rail posts, may be cast into sidewalk or anchored in blockout after sidewalk concrete has cured.

RAIL POST WITH CURB

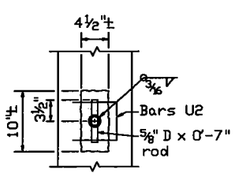

EMBEDDED POST ANCHOR

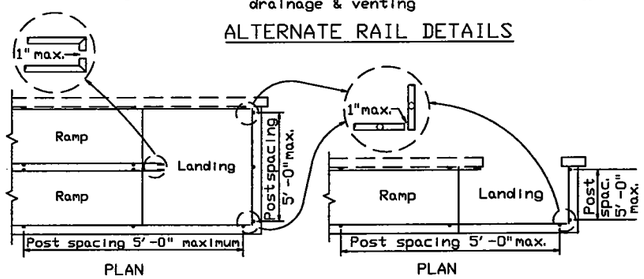

MULTI-LEVEL RAMP

SINGLE-LEVEL RAMP

GENERAL NOTES:

Design conforms to Texas Accessibility Standards and AASHTO 1993 Standard and current Interim Specifications.

See Sidewalk and Ramp details for (*) ramp slope, dimensions and for typical concrete and reinforcing steel. This sheet shows additional reinforcing steel required for handrail.

Material for posts and handrails shall be ASTM A53 Gr B, or A501. Base plates shall be A36. All parts shall be galvanized in accordance with the specifications.

Square tubing of equivalent outside dimensions and strength may be substituted for the round shapes shown as directed by the Engineer.

Anchor bolts for handrails attached to the wall shall be placed using an adhesive doweling system approved by the engineer. Anchor bolts shall have an allowable capacity of 2400 lbs in tension and 2300 lbs in shear. Installation of the anchor bolts, including hole depth and diameter, shall be in accordance with the manufacturers' recommendation. If required by the engineer, 3 of the first 10 anchors, and 5% of the remaining anchors shall be tested to 70% of minimum specified yield. The contractor shall provide a suitable ram, pump, pressure gauge and reaction system.

Anchor bolts for posts attached on the ramps shall conform to ASTM A36 or approved equal. Nuts for anchor bolts shall conform to ASTM A563 Gr A or better heavy hex. Threads for anchor bolts and nuts shall be rolled or cut threads of unified national coarse (UNC) thread series. Bolts and nuts shall have class 2A and 2B fit tolerances. Anchor bolts and exposed nuts shall be galvanized or coated with zinc-rich paint. Washers shall be galvanized. Anchor bolts in ramp and sidewalk may be anchored using a drill and grout system.

Exposed edges of handrail and handrail posts shall be rounded or chamfered to approximately 1/8 inch by grinding.

Anchor bolts, nuts and washers to be included in unit price bid for railing.

Erection drawings showing panel lengths, splice locations, rail post spacing and anchor bolts setting shall be submitted to the Engineer for approval.

R = Radius
D = Diameter

C74

Texas Department of Transportation
Design Division (Roadway)

RAMP HANDRAIL DETAILS

RHD-97 - (MOD)

FILE	RHD97.DGN	DN JSY	CK	DW BR	CK	NEG	
©TxDOT 1997		DIST	FED REG	FEDERAL AID PROJECT			SHEET
REVISIONS			6				
		COUNTY			CONTROL	SECT	JOB	HIGHWAY
							159

DISCLAIMER:
The use of this standard is governed by the "Texas Engineering Practice Act". No warranty of any kind is made by TxDOT for any purpose whatsoever. TxDOT assumes no responsibility for the conversion of this standard to other formats or for incorrect results or damages resulting from its use.

LEVELS DISPLAYED

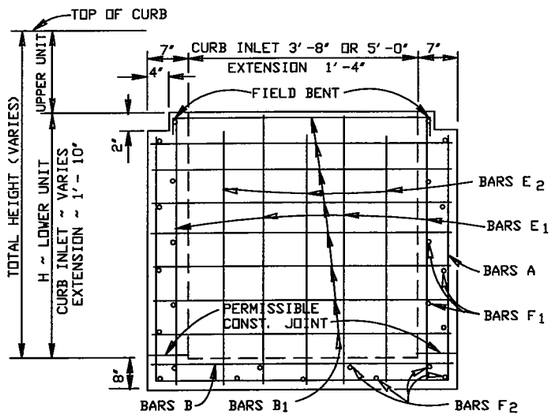

SECTION A-A

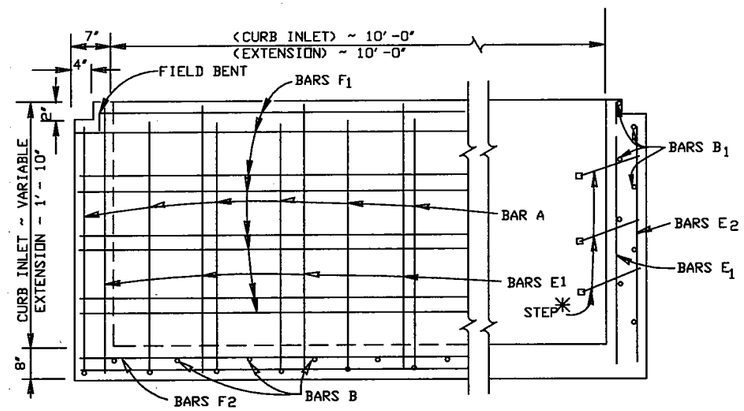

SECTION B-B

*LOCATION OF STEPS IN CURB INLET (LOWER UNIT) ONLY, WILL BE DETERMINED BY THE LOCATION OF RING COVER PLACEMENT. STEPS @ 15" O.C.

REINFORCING STEEL

LOWER UNIT 10' X 3'-8" (TY. I)				
BAR	NO.	SIZE	SPAC.	LENGTH
A	12	#4	12"	VARIES
B	11	#4	12"	4'-6"
B_1	VARIES	#4	12"	4'-6"
E_1	20	#4	18"±	VARIES
E_2	6	#4	18"±	VARIES
F_1	VARIES	#4	12"±	10'-10"
F_2	9	#4	—	10'-10"

LOWER UNIT 10' X 5'-0" (TY. II)				
BAR	NO.	SIZE	SPAC.	LENGTH
A	12	#4	12"	VARIES
B	11	#4	12"	5'-10"
B_1	VARIES	#4	12"	5'-10"
E_1	22	#4	18"±	VARIES
E_2	8	#4	18"±	VARIES
F_1	VARIES	#4	12"±	10'-10"
F_2	11	#4	—	10'-10"

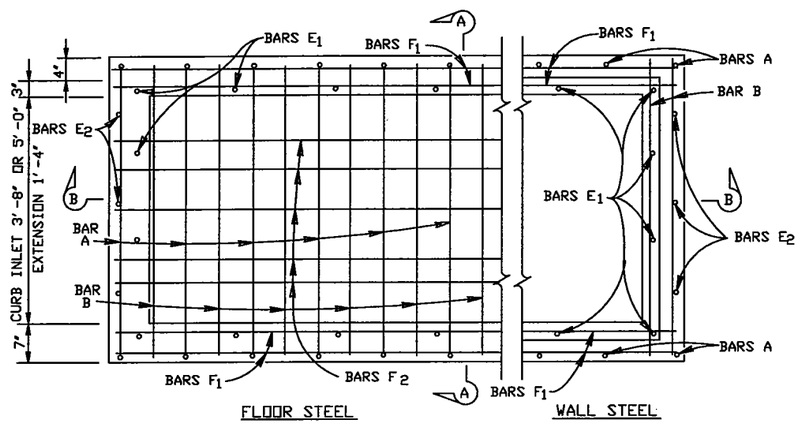

PLAN

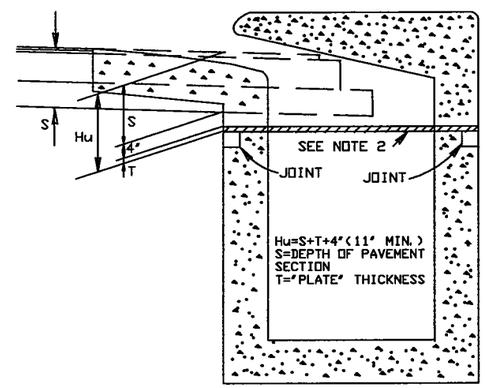

PHASE CONSTRUCTION

NOTES FOR PHASE CONSTRUCTION: (WHEN DIRECTED BY THE ENGINEER)

1. THE CURB INLET AND EXTENSION SHALL BE CONSTRUCTED TO A DEPTH "Hu" BELOW THE INLET AND EXTENSION GUTTER LINE ELEVATION.
2. CAP THE CURB INLET AND EXTENSION WITH A STEEL PLATE APPROVED BY THE ENGINEER AND CONSTRUCT THE ROADWAY OVER THE PLATE.
3. AFTER THE ROADWAY IS COMPLETED BUT PRIOR TO THE FINAL ACP, SAW CUT THE PAVEMENT, REMOVE THE PLATE AND COMPLETE THE UPPER PORTION OF THE CURB INLET AND/OR EXTENSION.

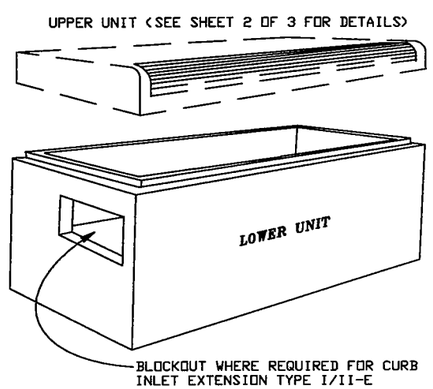

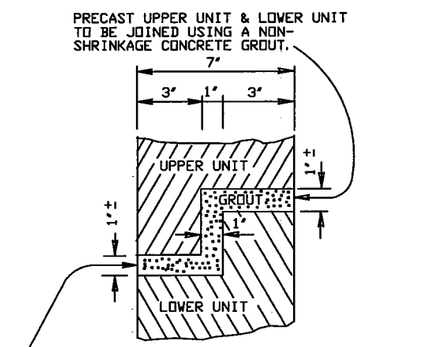

JOINT DETAIL

WHEN USING PRECAST UPPER UNIT, THIS SPACE IS FOR MAKING MINOR HORIZONTAL AND VERTICAL ADJUSTMENTS TO ACCOMODATE A FIT BETWEEN THE UPPER AND LOWER UNIT THAT ALLOWS FOR A MATCH LINE AND GRADE BETWEEN THE ROADWAY CURB AND THE UPPER UNIT OF THE INLET.

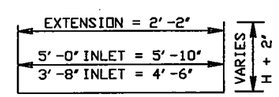

BARS A
(LOWER UNIT)

GENERAL NOTES:

QUANTITIES SHOWN ARE FOR CONTRACTORS INFORMATION ONLY.
ALL DIMENSIONS RELATING TO REINFORCING STEEL ARE TO CENTER OF BARS.
ALL REINFORCING STEEL SHALL HAVE A MINIMUM COVER OF 1 1/2 ".
ALL EXPOSED CORNERS SHALL BE CHAMFERED 3/4 ".
DEPRESSION SLAB SHALL RECEIVE A WOOD FLOAT FINISH.
FACE OF INLET TO CONFORM TO FACE OF CURB LINE.
ALL BARS INTERCEPTING MANHOLE RING & COVER SHALL BE CUT OR BENT.
PAYMENT FOR CONC., REINF. STEEL, M H RING & COVER, CURB ARMOR AND STEPS SHALL BE INCLUDED IN UNIT COST OF ITEM 465 "MANHOLE & INLETS".
RING & COVER LOCATION WILL BE AS DIRECTED/APPROVED BY THE ENGINEER.
GALVANIZED BOLTS, NUTS, WASHERS, PLATES AND GASKETS ARE SUBSIDIARY TO INLETS.
THE CONTRACTOR SHALL PROVIDE AN ADEQUATE MEANS TO LIFT AND PLACE THE INLETS, WHEN USING PRECAST UNITS.
ALL BARS AT PIPE BLOCKOUT LOCATIONS SHALL BE CUT OR BEND.
ALL LOWER UNITS SHALL RECEIVE INVERT MORTAR SHAPING.
PIPE BLOCKOUTS IN INLET WALLS SHOULD NOT EXCEED 3" BEYOND THE OUTER SHELL OF THE PIPE, TAKING INTO ACCOUNT THE SKEW OF THE PIPE AS NECESSARY.
COMMERCIAL STEPS (APPROVED BY THE ENGINEER) SHALL BE PROVIDED AND INSTALLED IN INLETS WHERE "H" EXCEEDS 4'-0".
CONSTRUCTION JOINT MAY BE RAISED A MAXIMUM OF 6"

SAN ANTONIO DISTRICT STANDARD

CURB INLET

TYPE I & II WITH

INLET EXTENSION I/II-E

C75

© 1999 Texas Department of Transportation

SHEET 1 OF 3

FED. RD. DIV. NO.	PROJECT NO.		SHEET NO.
6			
STATE	STATE DISTRICT	COUNTY	
TEXAS	SAT		
CONT.	SECT.	JOB	HIGHWAY NO.

3/01

STRUCTURE DESIGN
/BRIDGE/STDS/CURBINEXT.DGN

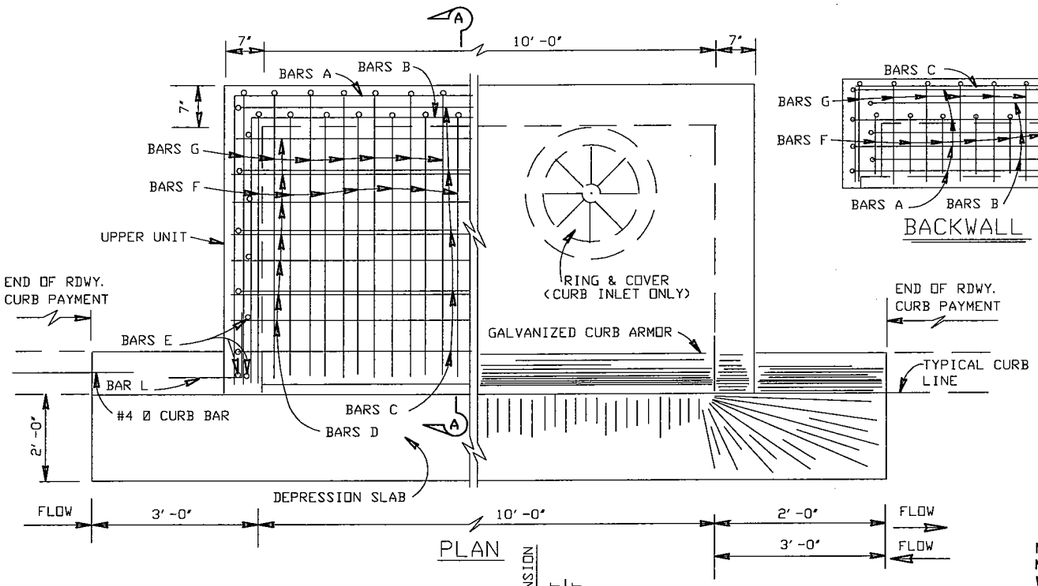

PLAN

BACKWALL

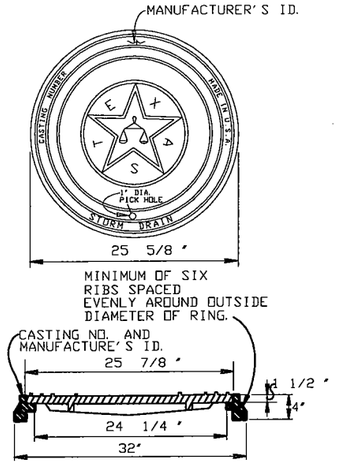

RING & COVER DETAIL

NOTE: MANHOLE RING AND COVER SHALL BE MANUFACTURED BY 'REXEL' DUCTILE IRON WITH WORDS 'NO DUMPING' AND BASS EMBLEM

REINFORCING STEEL (FOR Hu = 11")

UPPER UNIT 10' X 3'-8' (TY. I)					
BAR	NO.	SIZE	SPAC.	LENGTH	WEIGHT
A	4	#4	—	19'-10"	53
B	3	#4	—	18'-10"	38
C	5	#4	11"	13'-2"	44
D	7	#4	6"	10'-10"	51
E	12	#4	11"	1'-2"	9
F	21	#6	6"	4'-8"	147
G	22	#6	6"	5'-8"	187
H	4	#4	—	10'-10"	29
J	12	#4	12"	3'-6"	28
L	4	#4	—	2'-0"	5
M	3	#4	—	14'-8"	29
TOTAL WEIGHT				LBS.	620

UPPER UNIT 10' X 5' (TY. II)					
BAR	NO.	SIZE	SPAC.	LENGTH	WEIGHT
A	4	#4	—	22'-6"	60
B	3	#4	—	21'-6"	43
C	7	#4	11"	13'-2"	62
D	11	#4	6"	10'-10"	80
E	16	#4	11"	1'-2"	13
F	21	#6	6"	5'-8"	179
G	22	#6	6"	7'-0"	231
H	4	#4	—	10'-10"	29
J	12	#4	12"	3'-6"	28
L	4	#4	—	2'-0"	5
M	3	#4	—	14'-8"	29
TOTAL WEIGHT				LBS.	759

CL "A" CONCRETE QUANTITIES (FOR Hu = 11")

DEPRESSION SLAB	C. Y.
10' INLET	0.7
10' EXTENSION	0.7

UPPER UNIT (ONLY)	C. Y.
10' X 3'-8" CURB INLET	1.9
10' X 5'-0" CURB INLET	2.7
10' EXTENSION	1.0

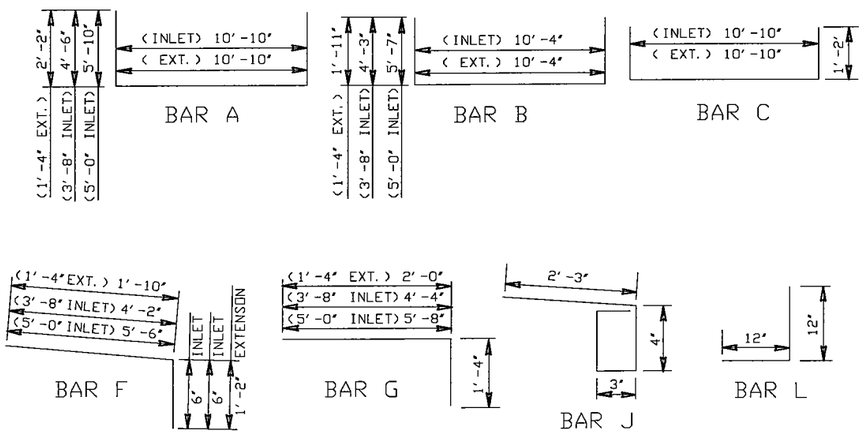

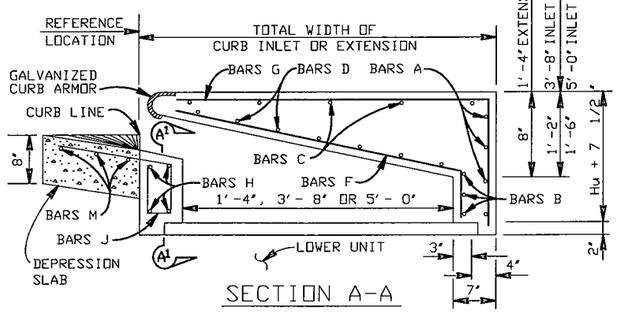

SECTION A-A

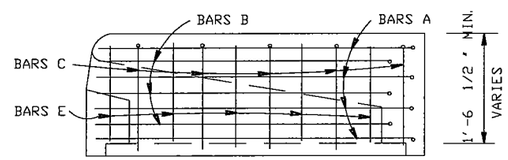

END WALL

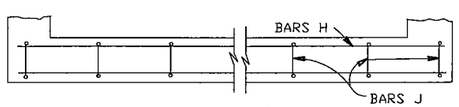

SECTION A¹-A¹

* IF THE ROADWAY CURB HEIGHT DOES NOT MATCH THE TOP OF THE INLET, TRANSITION THE ROADWAY CURB AT 40: 1.

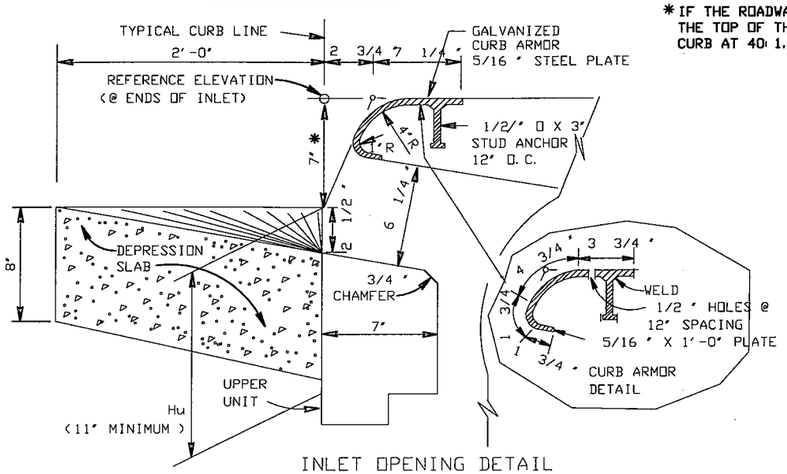

INLET OPENING DETAIL

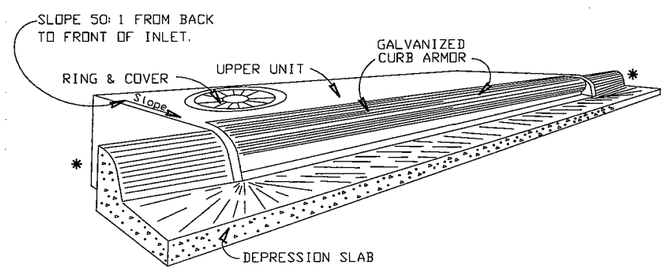

SEE SHEET 1 OF 3 FOR GENERAL NOTES.

SAN ANTONIO DISTRICT STANDARD

CURB INLET

TYPE I & II WITH

INLET EXTENSION I/II-E

C76

3/01

© 1997 Texas Department of Transportation

SHEET 2 OF 3

FED. RD. DIV. NO.	PROJECT NO.		SHEET NO.
6			
STATE	STATE DISTRICT	COUNTY	
TEXAS	SAT		
CONT.	SECT.	JOB	HIGHWAY NO.

STRUCTURE DESIGN
/BRIDGE/STDS/CURBINEXT.DGN

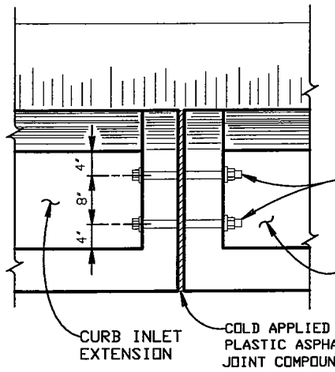

PLAN VIEW

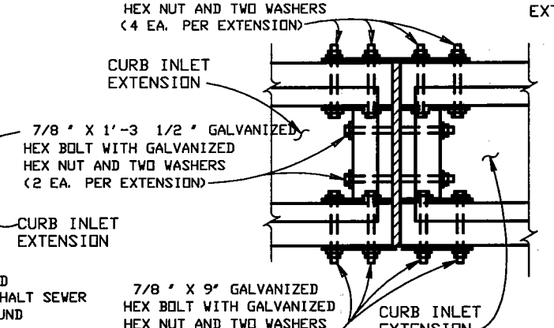

PLAN VIEW

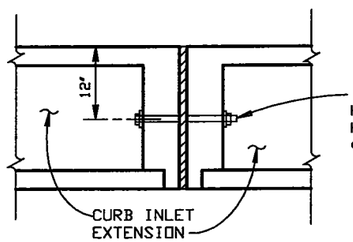

ELEVATION
UPPER UNIT

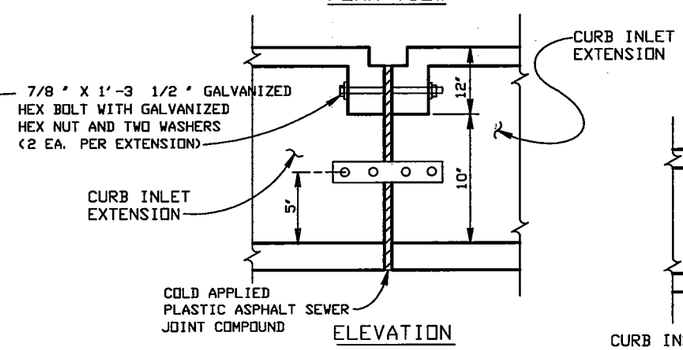

ELEVATION
LOWER UNIT

INLET BOLTING DETAILS
(SHOWING EXTENSION TO EXTENSION)

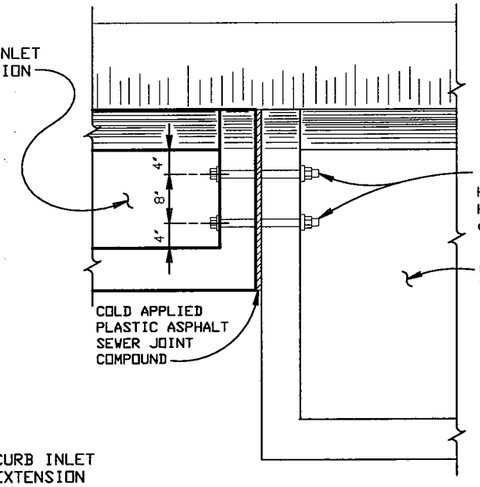

PLAN VIEW

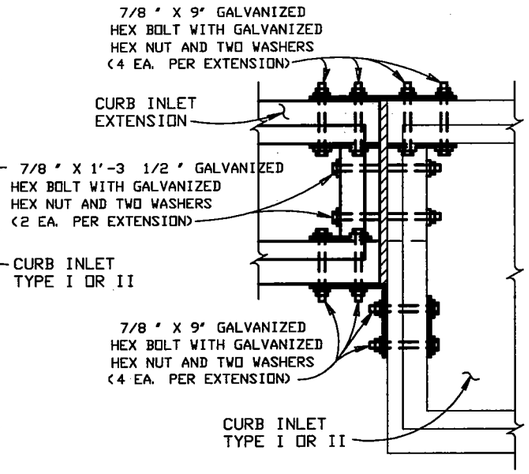

PLAN VIEW

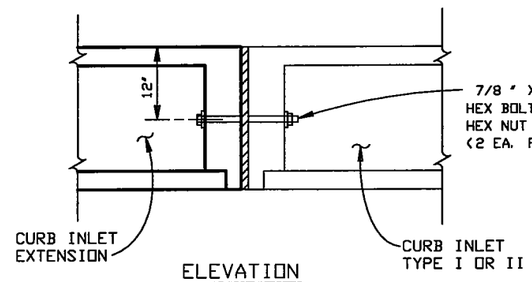

ELEVATION
UPPER UNIT

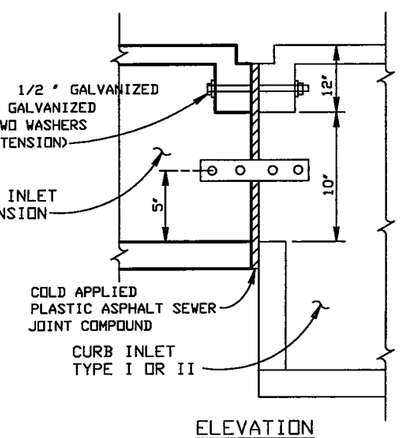

ELEVATION
LOWER UNIT

INLET BOLTING DETAILS
(SHOWING CURB INLET TO EXTENSION)

UPPER UNIT EXTENSION (FOR Hu = 11')					
BAR	NO.	SIZE	SPAC.	LENGTH	WEIGHT
A	4	#4	—	15'-2"	41
B	3	#4	—	14'-2"	28
C	3	#4	11"	13'-2"	26
D	3	#4	6"	10'-10"	22
E	8	#4	11"	1'-2"	6
F	21	#6	6"	2'-0"	63
G	22	#6	6"	3'-4"	110
H	4	#4	—	10'-10"	29
J	12	#4	12"	3'-6"	28
L	4	#4	—	2'-0"	5
M	3	#4	—	14'-8"	29
REINFORCING STEEL				LBS.	387
CL. 'A' CONC.				C. Y.	1.0

LOWER UNIT EXTENSION					
BAR	NO.	SIZE	SPAC.	LENGTH	WEIGHT
A	12	#4	12"	6'-2"	49
B	11	#4	12"	2'-2"	16
B_1	3	#4	12"	2'-2"	4
E_1	18	#4	18"±	2'-3"	27
E_2	4	#4	18"±	2'-1"	6
F_1	16	#4	12"±	10'-10"	116
F_2	5	#4	—	10'-10"	36
REINFORCING STEEL				LBS.	254
CL. 'A' CONC.				C. Y.	1.4

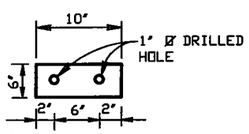

3/8 " X 6" X 10" GALVANIZED STEEL
BOLTING EXTENSION TO CURB INLET
2 EACH REQUIRED

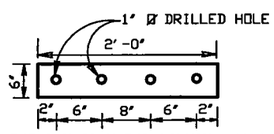

3/8 " X 6" X 24" GALVANIZED STEEL
BOLTING EXTENSION TO CURB INLET
2 EACH REQUIRED
BOLTING EXTENSION TO EXTENSION
4 EACH REQUIRED

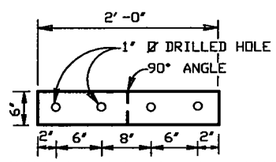

3/8 " X 6" X 24" GALVANIZED STEEL
BOLTING EXTENSION TO CURB INLET
1 EACH REQUIRED

PLATES

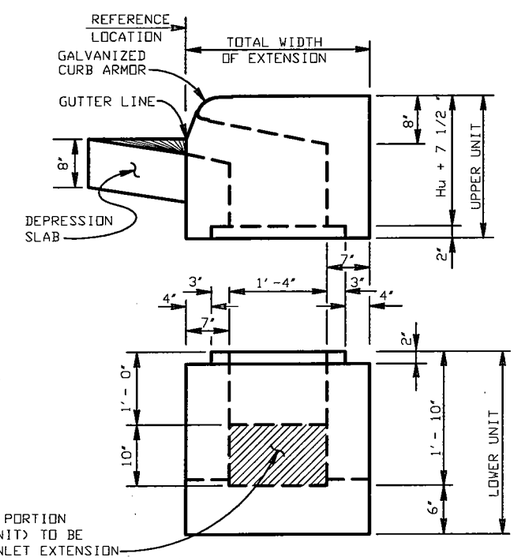

SECTION A-A CURB INLET
EXTENSION TYPE X

NOTES:
WHEN INLET EXTENSIONS ARE REQUIRED FOR ON GRADE INLETS THE EXTENSION(S) SHALL BE PLACED ON THE UPSTREAM END OF THE INLET.
FOR CURB INLET EXTENSION REINFORCING STEEL, NOTES & VARIOUS OTHER APPLICABLE DETAILS NOT FOUND ON THIS SHEET, REFER TO SHEETS 1 & 2.

SAN ANTONIO DISTRICT STANDARD

CURB INLET EXTENSION

TYPE I/II-E

© 1999 Texas Department of Transportation

SHEET 3 OF 3

FED. RD. DIV. NO.	PROJECT NO.		SHEET NO.
6			
STATE	STATE DISTRICT	COUNTY	
TEXAS	SAT		
CONT.	SECT.	JOB	HIGHWAY NO.

C77 3/01

T:/ENGDATA/STANDARDS/CURBINEXT.DGN

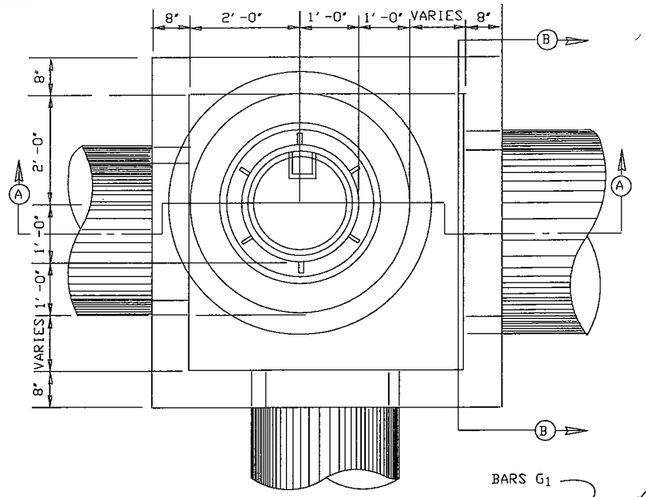

PLAN

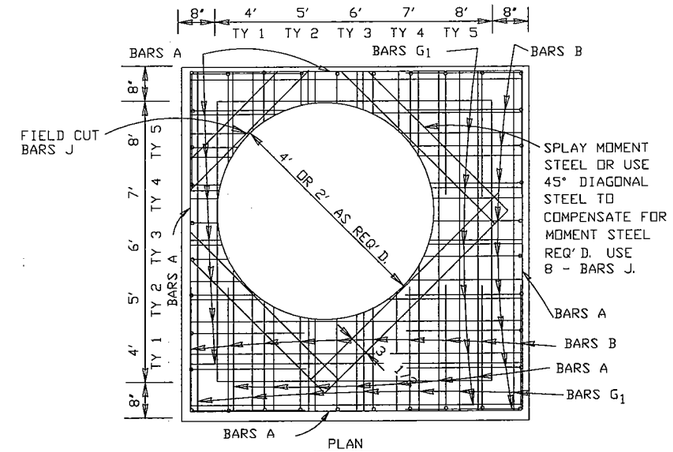

PLAN
JUNCTION BOX TOP SLAB

4' X 4' X 4' (TY 1)

BAR	NO.	SIZE	SPAC.	LEN.	WGT.
A	16	4	9"	5'-1"	54
B	32	5	8"	6'-6"	217
C	32	5	8"	4'-3"	142
D	16	4	9"	5'-1"	54
E	20	3	12"	3'-11"	29
G	20	4	12"	5'-0"	67
G_1	24	4	12"	5'-0"	80
H	20	3	12"	4'-5"	33
J	8	6	3 1/2	3'-9"	45
REINF. STEEL				LBS.	721 ✳
‡ CL. A CONC.				C. Y.	3.35✳

6' X 6' X 6' (TY 3)

BAR	NO.	SIZE	SPAC.	LEN.	WGT.
A	20	4	9"	7'-1"	95
B	44	5	8"	8'-6"	390
C	44	5	8"	4'-3"	195
D	20	4	9"	7'-1"	95
E	28	3	12"	5'-11"	62
G	28	4	12"	7'-0"	131
G_1	32	4	12"	7'-0"	150
H	28	3	12"	6'-5"	68
J	8	6	3 1/2	3'-9"	45
REINF. STEEL				LBS.	1231✳
‡ CL. A CONC.				C. Y.	6.87✳

5' X 5' X 5' (TY 2)

BAR	NO.	SIZE	SPAC.	LEN.	WGT.
A	18	4	9"	6'-1"	73
B	40	5	8"	7'-6"	313
C	40	5	8"	4'-3"	177
D	18	4	9"	6'-1"	73
E	24	3	12"	4'-11"	44
G	24	4	12"	6'-0"	96
G_1	28	4	12"	6'-0"	112
H	24	3	12"	5'-5"	49
J	8	6	3 1/2	3'-9"	45
REINF. STEEL				LBS.	982✳
‡ CL. A CONC.				C. Y.	4.96✳

7' X 7' X 7' (TY 4)

BAR	NO.	SIZE	SPAC.	LEN.	WGT.
A	24	4	9"	8'-1"	130
B	52	5	8"	10'-6"	569
C	52	5	8"	5'-3"	285
D	24	4	9"	8'-1"	130
E	32	4	12"	6'-11"	148
G	32	4	12"	8'-0"	171
G_1	36	4	12"	8'-0"	192
H	32	3	12"	7'-5"	89
J	8	6	3 1/2	3'-9"	45
REINF. STEEL				LBS.	1759✳
‡ CL. A CONC.				C. Y.	9.09✳

8' X 8' X 8' (TY 5)

BAR	NO.	SIZE	SPAC.	LEN.	WGT.
A	26	5	9"	9'-1"	246
B	56	5	8"	11'-6"	672
C	56	5	8"	5'-3"	307
D	26	5	9"	9'-1"	246
E	36	4	12"	7'-11"	190
G	36	4	12"	9'-0"	216
G_1	40	4	12"	9'-0"	240
H	36	4	12"	8'-5"	202
J	8	6	3 1/2	3'-9"	45
REINF. STEEL				LBS.	2364✳
‡ CL. A CONC.				C. Y.	11.62✳

✳ QUANTITIES ARE FOR CONTRACTOR'S INFORMATION ONLY.
‡ CONCRETE QUANTITIES ALLOW FOR MANHOLE ACCESS BUT HAVE NOT BEEN DECREASED FOR DRAINAGE PIPES BECAUSE THE NUMBER AND SIZE VARY.

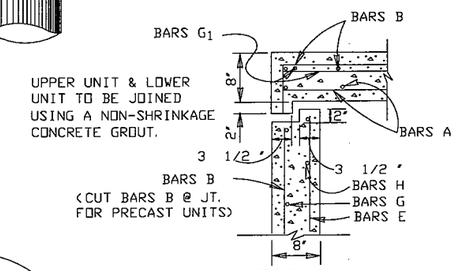

DETAIL A
PRECAST UPPER & LOWER UNIT

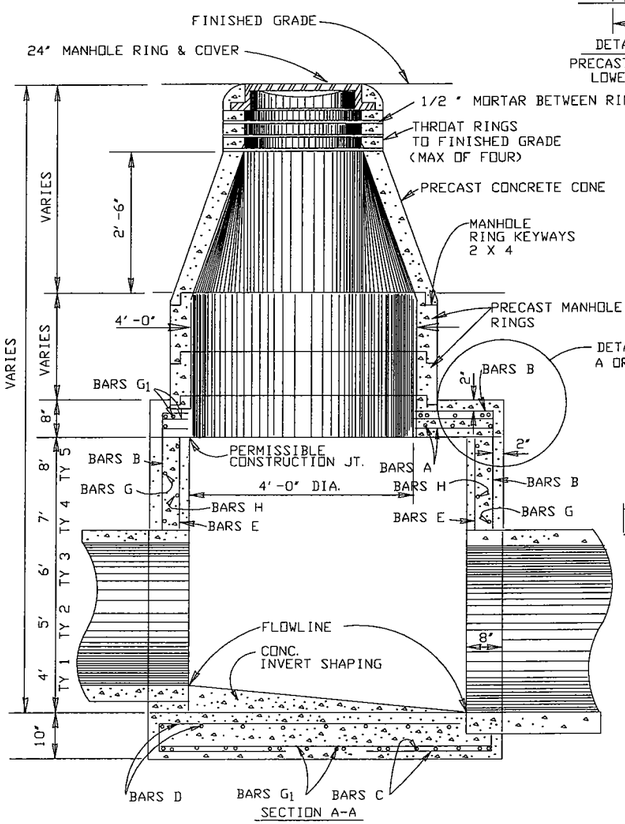

SECTION A-A

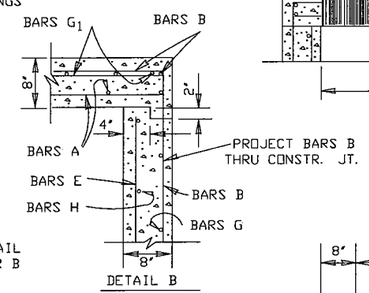

DETAIL B
CAST-IN-PLACE UPPER UNIT W/PRECAST LOWER UNIT

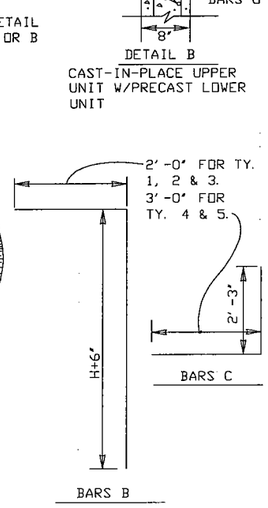

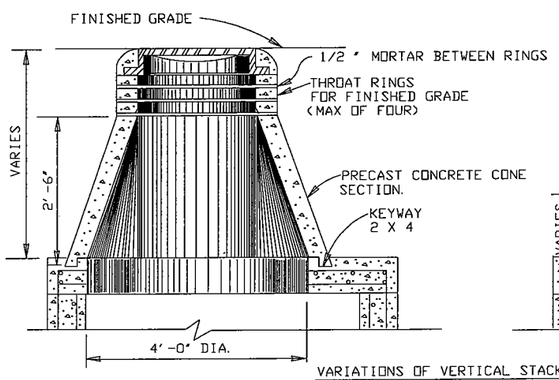

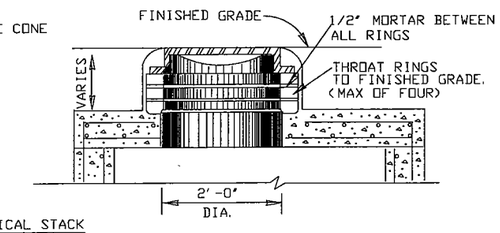

VARIATIONS OF VERTICAL STACK

VERTICAL STACK DESIGN SHALL BE GOVERNED BY THE DEPTH FROM THE TOP OF THE LOWER UNIT TO FINISHED GRADE.

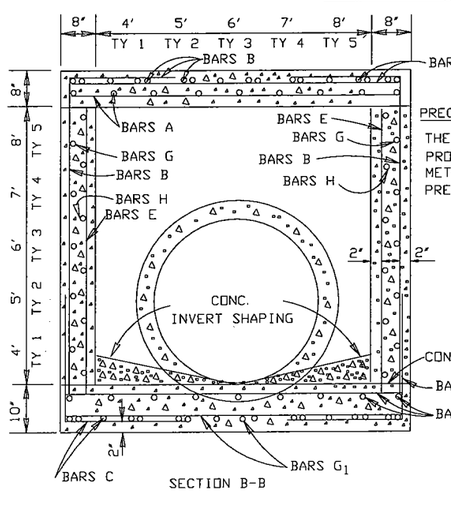

SECTION B-B

PRECASTING NOTE :

THE CONTRACTOR SHALL PROVIDE AN ADEQUATE METHOD TO LIFT THE PRECAST UNIT.

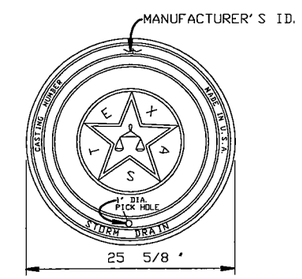

MINIMUM OF SIX RIBS SPACED EVENLY AROUND OUTSIDE DIAMETER OF RING.

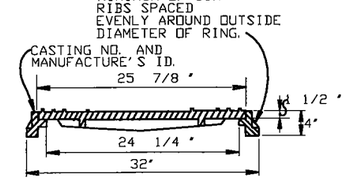

GENERAL NOTES:

DIMENSIONS FOR REINFORCING STEEL ARE TO CENTER OF BARS.
ALL BARS INTERCEPTING MANHOLE AND PIPE OPENINGS SHALL BE FIELD CUT OR BEND.
WHEN THE MANHOLE IS CLOSE TO EXISTING UTILITIES, IT SHALL BE THE CONTRACTOR'S RESPONSIBILITY TO PROTECT AND MAINTAIN THESE LINES.

MANHOLE RING AND COVER SHALL BE DESIGNED MANUFACTURED BY 'REXEL' DUCTILE IRON WITH WORDS 'NO DUMPING' AND BASS EMBLEM.

THE NUMBER, SIZE AND LOCATION OF PIPES WILL VARY; SEE THE CULVERT SECTIONS.

MANHOLE
TYPE 1 THRU 5

© 1998 Texas Department of Transportation

FED. RD. DIV. NO.	PROJECT NO.		SHEET NO.
6			
STATE	STATE DISTRICT	COUNTY	
TEXAS	SAT		
CONT.	SECT.	JOB	HIGHWAY NO.

C78

10/95

STRUCTURE DESIGN
/BRIDGE/STDS/DMHOLE1T5.DGN

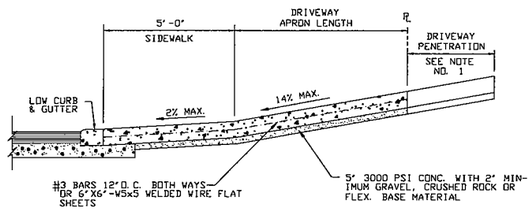

TYPICAL RESIDENTIAL DRIVEWAY SECTION

WHERE SIDEWALK ABUTS CURB N. T. S.

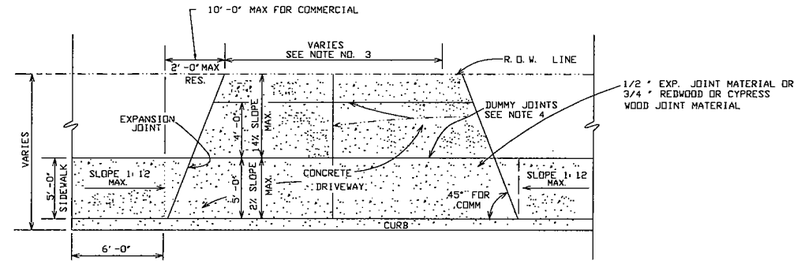

TYPICAL DRIVEWAY PLAN VIEW

WHERE SIDEWALK ABUTS CURB N. T. S.

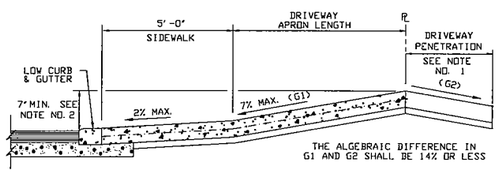

TYPICAL DRIVEWAY SECTION

WHERE SIDEWALK ABUTS CURB N. T. S.
(WHERE PROPERTY IS LOWER THAN THE STREET)

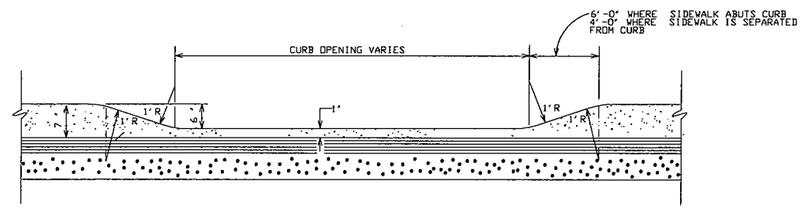

ELEVATION VIEW OF DRIVEWAY AT CURB

N. T. S.

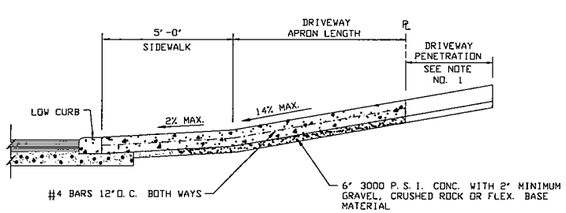

TYPICAL COMMERCIAL DRIVEWAY SECTION

WHERE SIDEWALK ABUTS CURB N. T. S.

DRIVEWAY NOTES:

1) DRIVEWAY PENETRATION REFERS TO A PORTION OF THE DRIVEWAY THAT MAY BE NECESSARY TO RECONSTRUCT WITHIN PRIVATE PROPERTY TO COMPLY WITH A MAXIMUM DRIVEWAY SLOPE.
2) 7" MINIMUM HEIGHT WILL NOT NECESSARILY OCCUR AT THE PROPERTY LINE. IT MAY OCCUR WITHIN THE RIGHT OF WAY OR WITHIN THE DRIVEWAY PENETRATION ON PRIVATE PROPERTY.
3) PROPOSED DRIVEWAYS ARE TO MATCH EXISTING SIZES, BUT ARE NOT TO EXCEED 30 FT. AT THE PROPERTY LINE UNLESS AUTHORIZED BY THE CITY ENGINEER.
4) DUMMY JOINTS TO BE PLACED AT 4' INTERVALS FROM THE BACK OF THE CURB AND ONE DUMMY JOINT PLACED PERPENDICULAR TO THE CURB AND BEING IN THE CENTER OF THE DRIVEWAY AS SHOWN.

Lockwood, Andrews & Newnam, Inc.

STATE OF TEXAS
DAWN ANN GREEN
79721
LICENSED
PROFESSIONAL ENGINEER

City of Kerrville
Main Street
Extension
Project

MAIN STREET
TYPICAL DRIVEWAY
DETAILS

No.	Date	Revisions	App.

Scale:
Designed by: T.C.
Drawn by: M.K.
Checked by: P.J.
Approved by: D.G.
Date: Aug. 2004
Project No. 2178-20-001

C79

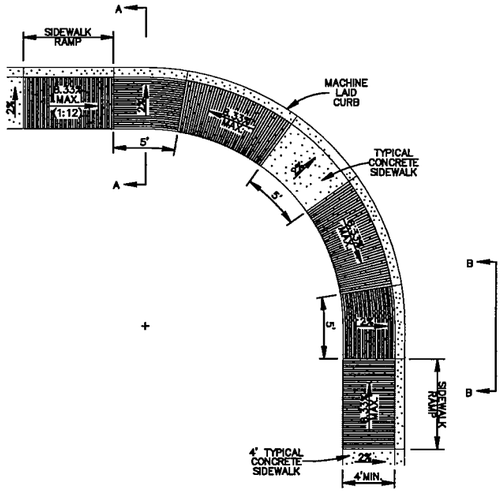

TYPICAL SIDEWALK RAMP – TYPE I

SIDEWALK ABUTS CURB

SCALE : 1"=5'

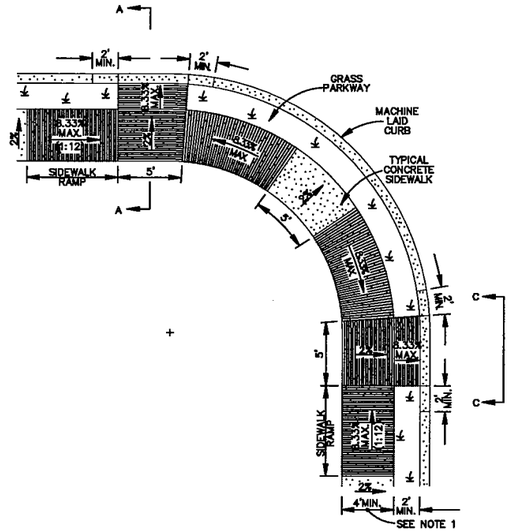

TYPICAL SIDEWALK RAMP – TYPE III

SIDEWALK SEPARATED FROM CURB

SCALE : 1"=5'

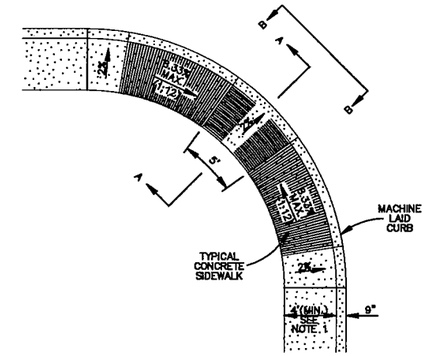

TYPICAL SIDEWALK RAMP – TYPE V

SIDEWALK ABUTS CURB

SCALE : N.T.S.

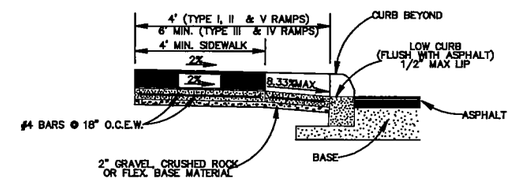

SECTION A–A

SCALE : 1"=2'

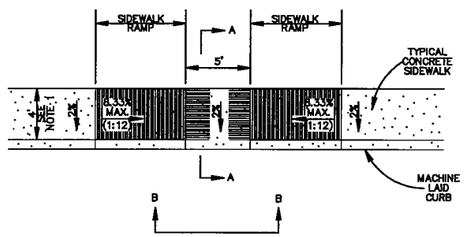

TYPICAL SIDEWALK RAMP – TYPE II

USED AT TEE INTERSECTIONS WHERE SIDEWALK ABUTS CURB

SCALE : 1"=5'

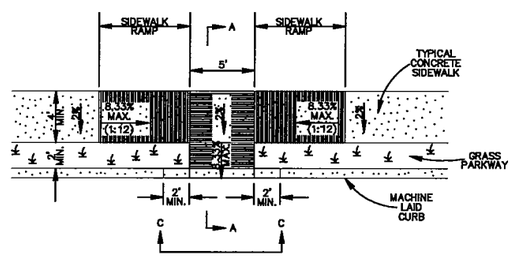

TYPICAL SIDEWALK RAMP – TYPE IV

USED AT TEE INTERSECTIONS WHERE SIDEWALK IS SEPARATED FROM CURB

SCALE : 1"=5'

TYPE I, II, III, IV & V RAMPS(SEE NOTE 7)		
GUTTER SLOPE	SIDEWALK RAMP LGTH.(1:12)	
	LOW SIDE	HIGH SIDE
1%	5'–6"	7'–2"
2%	5'–0"	8'–4"
3%	4'–8"	10'–0"
4%	4'–2"	12'–8"
5%	3'–10"	16'–8"

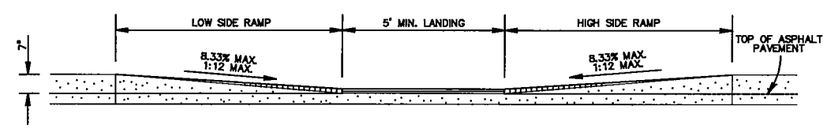

SECTION B–B

CURB PROFILE WHERE SIDEWALK ABUTS CURB

SCALE : 1"=2'

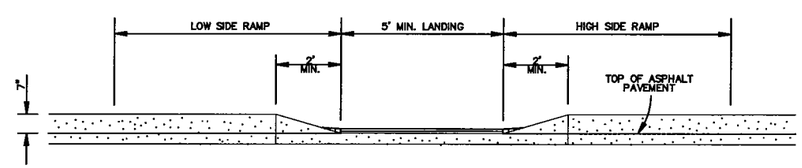

SECTION C–C

CURB PROFILE WHERE SIDEWALK IS SEPARATED FROM CURB

SCALE : 1"=2'

GENERAL NOTES

1. SIDEWALKS SHALL HAVE A MINIMUM UNOBSTRUCTED WIDTH OF 4' ON ALL STREETS UNLESS OTHERWISE NOTED.
2. SIDEWALK RAMP LENGTHS PRESENTED IN TABLE 1 ARE GUIDELINES ONLY. SIDEWALK RAMP LENGTHS SHALL BE OF SUFFICIENT LENGTH TO MAINTAIN 8.33% (1:12) MAXIMUM SLOPE.
3. ALL RAMPS SHALL CONTRAST VISUALLY WITH ADJOINING SURFACES, EITHER LIGHT–ON–DARK, OR DARK–ON–LIGHT. THE MATERIAL USED TO PROVIDE CONTRAST SHALL BE AN INTEGRAL PART OF THE WALKING SURFACE.
4. SIDEWALK RAMP TYPE V SHALL BE USED ONLY WHERE THERE IS SIGNIFICANT RESTRICTION WITHIN THE PARKWAY TO CONSTRUCT TYPE I OR TYPE III RAMPS.
5. CONSTRUCTION OF ALL WHEELCHAIR RAMPS TO BE INCLUDED UNDER CONCRETE SIDEWALKS". RAMP SURFACE SHALL BE BRUSH FINISHED AND GROOVED.
6. THESE DETAILS ARE FOR REFERENCE ONLY. ACTUAL LOCATIONS OF WHEELCHAIR RAMPS TO BE SHOWN ON CONSTRUCTION PLANS. CITY ENGINEER CAN ADJUST LOCATIONS FOR SAFETY OR UTILITY CLEARANCE.
7. SIDEWALKS LESS THAN 5 FEET IN WIDTH SHALL BE PROVIDED WITH A PASSING SPACE AT A MAXIMUM SPACING OF 200 FEET.
8. WHEELCHAIR RAMP SHALL BE CONSTRUCTED WITH 4" CONCRETE AND 2" GRAVEL, CRUSHED ROCK OR FLEXIBLE BASE MATERIAL.
9. REINFORCING STEEL SHALL BE #3 BARS AT 18" O.C.E.W. OR 6" x 6" – W2.9 x W2.9.
10. SIDEWALK GROOVES SHALL BE 1 / 4" DEEP, 3 / 4" WIDE AND 2" APART.

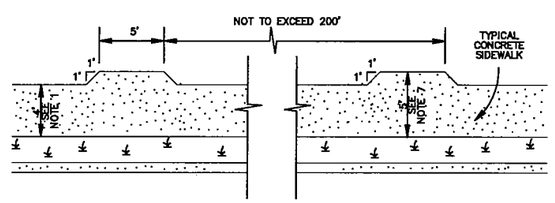

SIDEWALK PASSING SPACE

SCALE : 1"=5'

Lockwood, Andrews & Newnam, Inc.

STATE OF TEXAS
DAWN ANN GREEN
79721
LICENSED PROFESSIONAL ENGINEER

Dawn Green 9-30-04

City of Kerrville
Main Street
Extension
Project

WHEELCHAIR RAMP DETAILS

No.	Date	Revisions	App.

Scale: –
Date: Aug. 2004
Designed by: T.C.
Drawn by: M.K.
Checked by: P.J.
Approved by: D.G.
Project No. 2178–20–001

C80

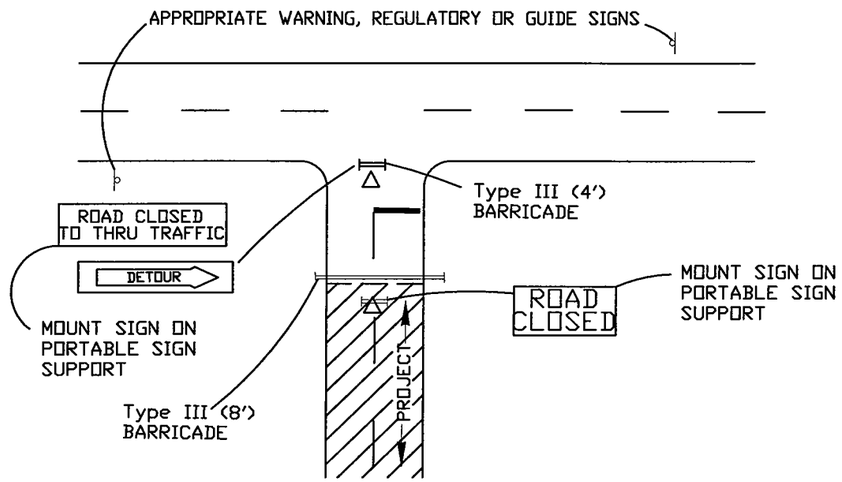

PROJECT LIMITS FOR CLOSED ROADWAY

BARRICADES SHALL BE ERECTED COMPLETELY ACROSS ROADWAY. CHANNELIZING DEVICES MAY BE DRUMS, VERTICAL PANELS OR CONES AS SPECIFIED IN THE PLANS

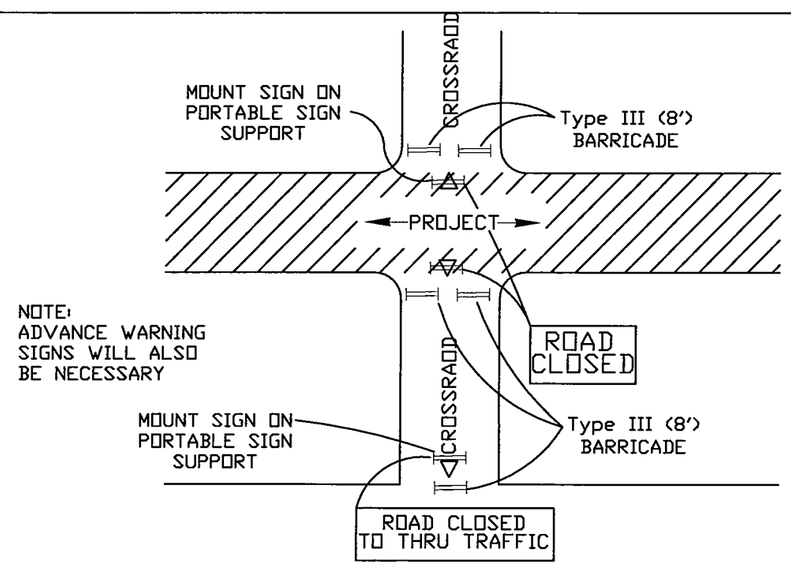

CROSS STREET SIGNING AND BARRICADING TOTALLY CLOSED

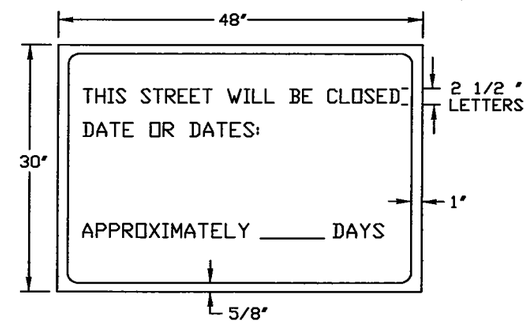

LETTERS- BLACK
BORDER- BLACK
BACKGROUND- ORANGE

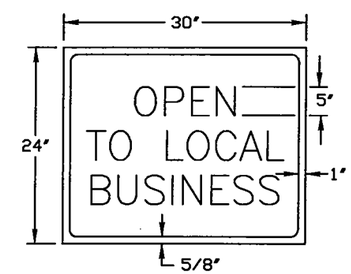

LETTERS- WHITE
BORDER- WHITE
BACKGROUND- BLUE REFLECTIVE

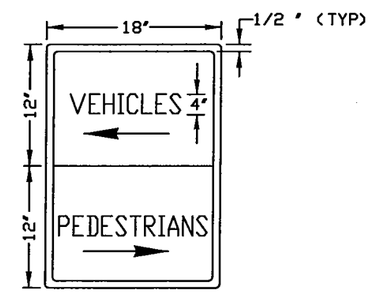

LETTERS- BLACK
BORDER- BLACK
BACKGROUND- ORANGE
SPACING-3 SIGNS PER BLOCK

DIRECTION OF ARROWS ARE REVERSABLE

LGN Lockwood, Andrews & Newnam, Inc.

STATE OF TEXAS — JOHN W. GREEN — 79721 — LICENSED — PROFESSIONAL ENGINEER

City of Kerrville
Main Street Extension Project

BARRICADE AND CONSTRUCTION DETAILS

No.	Date	Revisions	App.

Scale
Designed by T.C. Date
Drawn by M.K.
Checked by P.J.
Approved by D.G.
Project No. 2176-20-001

C81

TRAFFIC NOTES

TRENCHING/EXCAVATING

The following notes shall apply to excavations of trenches or pits that are located in the pavement or are within six (6) feet of the edge of roadway:

1.) Trench walls shall not be closer than three (3) feet from the edge of the traveled way at any stage of construction.

2.) Traffic control devices shall be in place before starting any excavation.

3.) Trenches or pits will not be permitted to be bridged by steel plates and open to traffic unless they are temporarily backfilled to finished street grade.

4.) For pits or trenches along or in a roadway that are going to be left open over night that are zero to fifty (0 - 50) feet in length, the following applies. GUARD RAIL OR CONCRETE BARRIER SHALL BE USED.

5.) For pits or trenches along or in roadway that are going to be left open over night and are longer than 50 feet in length. CONCRETE BARRIERS MUST BE USED.

6.) Plastic construction fencing shall be required for any trench or pit left open over night.

7.) When using any guardrail or concrete barrier, protected end must be used as per the TEXAS-M.U.T.C.D.

8.) For vertical drop-offs greater than two (2) feet along roadway, low profile concrete with appropriate end protection must be installed.

9.) All concrete barriers placed on City R.O.W shall be low profile. No high profile barriers will be allowed.

REFLECTIVE SHEETING

The reflectorized white and reflectorized orange stripes for channelinzing devices such as barricade drums and vertical panels shall be constructed of reflective sheeting meeting the color and retro-reflectivity requirements of high intensity, unless otherwise specified in the plans.

MAINTENANCE

1.) All traffic signs shall be kept in proper position, clean and legible at all times. Damaged barricades, signs, and other traffic control devices shall be replaced without undue delay.

2.) To ensure adequate maintenance, a suitable schedule for inspection, cleaning, and replacement of barricades, lights, and signs shall be established.

3.) Special attention and necessary action shall be taken to see that weeds, trees, shrubbery and construction materials do not obscure the face of any sign or barricades.

TRAINING

Each person whose actions affect maintenance and construction zone safety, from the upper-level management personnel through construction and maintenance field personnel, should receive training appropriate to the job decision each individual is required to make. Only those individuals who are qualified by means of adequate training in safe traffic control practices and have a basic understanding of the principles established by applicable standards and regulations, including those of the TEXAS M.U.T.C.D. should supervise the selection, placement, and maintenance of traffic control devices in maintenance and construction areas.

SPECIAL EVENTS BARRICADING

All Type I, (8') barricades used for special events (Dome, Runs, Walks, Parades etc.) shall be a minimum of 42" high and 96" wide. Any necessary signs will require proper sign stands.

USE OF CITY R. O. W.

The City of Kerrville reserves the right to allow contracting and barricading sub-contractors to use the City's R.O.W. The City also reserves the right to advise contractors and barricading sub-contractors to remove stored or unused traffic control devices from the City of Kerrville R.O.W. It is the barricading sub-contractor's responsibility to remove any traffic control device from City's R.O.W. when instructed to do so by a City representative.

CLOSURE DIAGRAMS

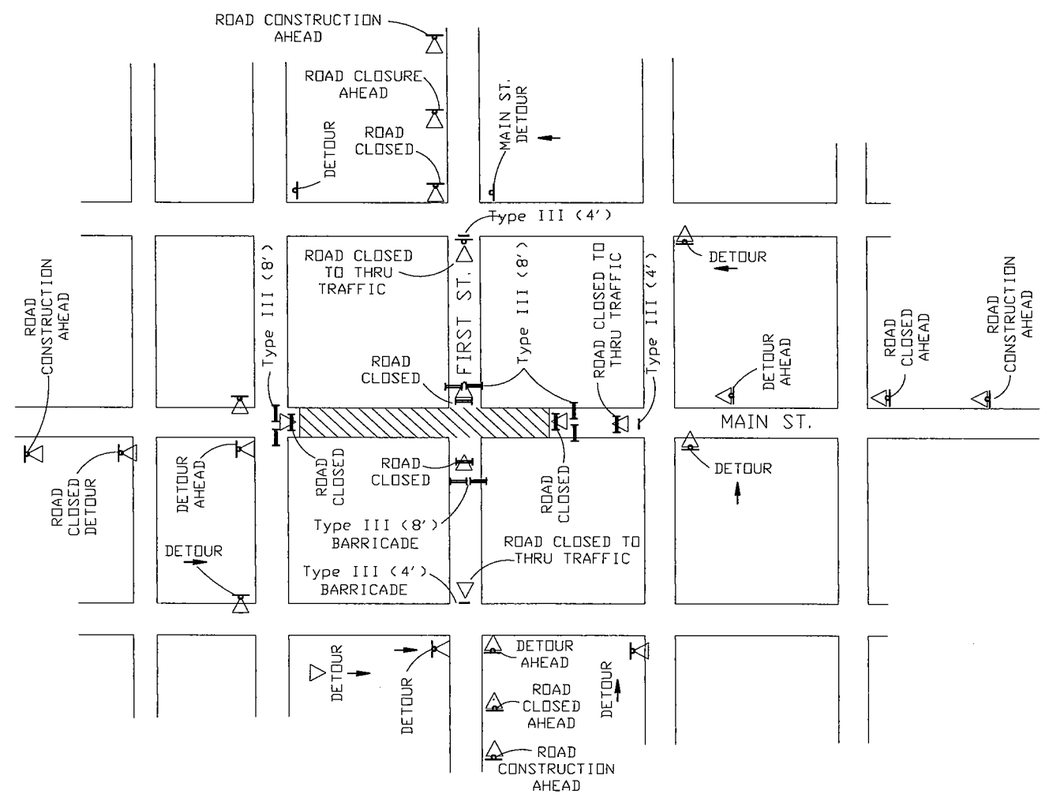

TYPICAL INTERSECTING STREET CLOSURE
FOR TWO LANE STREETS

NOTE:
ALL SIGNS WILL BE
MOUNTED ON SIGN
SUPPORTS ONLY

Lockwood, Andrews & Newnam, Inc.

STATE OF TEXAS
DAWN ANN GREEN
79721
LICENSED
PROFESSIONAL ENGINEER

City of Kerrville
Main Street
Extension
Project

BARRICADE AND CONSTRUCTION DETAILS

No.	Date	Revisions	App.

Scale:
Designed by: T.C.
Drawn by: M.K.
Checked by: P.J.
Approved by: D.G.
Project No. 2178-20-001

C82

Type I BARRICADE

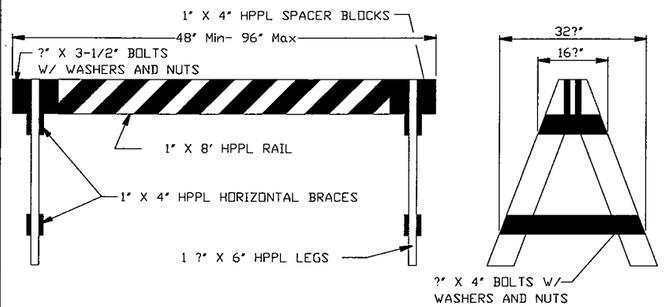

1.) Only the following Type I barricade shall be used in the City of Kerrville R.O.W.

A. 1" x 8" plastic rail with 2" x 6" wooden legs.
B. 1" x 8" wooden rail with plastic legs.
C. 1" x 8" wooden rail with 2" x 6" wood legs.
D. No screws allowed for assembly of A-legs or rail.
E. Warning lights will be used as directed by the Traffic Engineer.
F. All Type I (4') barricades will be a minimum of 36" high and 60" wide. (For construction use only)
G. All Type I (8') barricades with wooden legs shall be 2" X 6" wood only.
H. All Type I (4') barricades with wooden legs shall be 1" X 8" wood only.

2.) Type I Barricades shall not be used for partial and total street closures in construction work zones. Only Type III barricades shall be used for this purpose.
3.) Warning lights shall not be mounted on Type I barricades.

(See TxDOT B.C. Sheets (BC-98) for specific construction information)

PLASTIC DRUMS

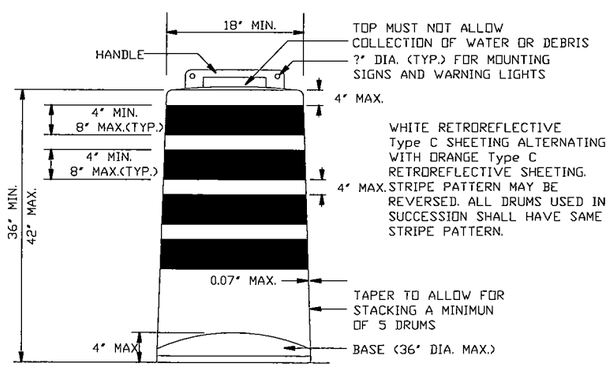

1.) Each drum must have a 40 lb. rubber or plastic snap on.
2.) No signs larger than 18" X 24" will be allowed to be mounted on plastic drums.
3.) No warning lights will be allowed to be mounted on plastic barrels.
4.) In lieu of a warning light, a yellow reflector will be acceptable.

(See TxDOT B.C. Sheets (BC-98) for specific construction information)

Type III BARRICADE

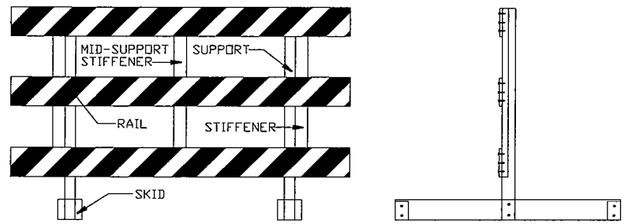

1.) Only the following Type III barricade shall be used in the City of Kerrville R.O.W.

A. Hollow polyvinyl or fiberglass tubing post with 1" X 8" wooden rails.
B. Hollow polyvinyl or fiberglass tubing post with plastic rails.
C. Skids must be wood or solid plastic only.
D. Warning lights shall not be mounted on Type III barricades.

(See TxDOT B.C. Sheets (BC-98) for specific construction information)

SIGNS

1.) A maximum of two signs can be mounted on any one Long/Intermediate Term Stationary Portable Sign Support.
2.) 48" X 48" signs shall be mounted separately on the Long/Intermediate Term Stationary Portable Sign Support.
3.) For Short Term Stationary Portable Sign Support the distance from the bottom of the vinyl sign to the exiting ground must be one (1) foot.
4.) Long/Intermediate Term Stationary Portable Signs must be made of wood or plastic only.
5.) No signs shall be mounted to any Type I, Type III, or folding barricades.
6.) Signs shall be mounted only on TxDOT approved sign supports.
7.) Detour signs will be mounted on single "D" legs w/ 7' clearance from the bottom of the sign.
8.) WORK DURATION TERMINOLOGY
Long Term Stationary = occupies a location 3 or more days;
Intermediate-Term Stationary = occupies a location for overnight to 3 days.
Short Term Stationary = daylight work that occupies a location from 1 to 12 hours.
Short Duration = occupies a location up to 1 hour.

(See TxDOT B.C. Sheets (BC-98) for specific construction information)

TEMPORARY MARKINGS

1.) Solid double yellow painted lines shall be installed for temporary division of traffic or construction duration longer than five (5) days, with repainting to occur once monthly or at the discretion of the Traffic Engineer. (All cost of upkeep will be at the contractor's expense.)
2.) Solid double yellow tabs, or V/P pannels shall be installed for temporary division of traffic for construction duration less than five (5) days, with re-tabbing to occur at the discretion of the Traffic Engineer. NAILS SHALL NOT BE USED TO FIX TABS TO PAVEMENT OR BASE
(All cost of upkeep will be at the contractor's expense.)
(See TxDOT B.C. Sheets for specific construction information.)

TEMPORARY CONCRETE BARRIER

1.) All concrete barriers placed on City R.O.W. shall be low profile.
2.) No high profile barriers will be allowed.
3.) Reflectors will be required on each concrete barrier.

(See TxDOT B.C. Sheets (BC-98) for specific construction information)

LONG TERM/INTERMIDIATE TERM SIGN SUPPORT

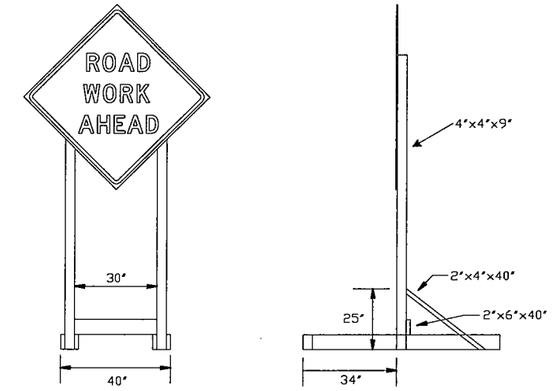

1.) 48" X48" signs must be mounted independently.
2.) A maximum of two signs can be mounted on any one long term/intermediate sign support.
3.) Sand bag all sign supports.
4.) Distance from the bottom of the sign to the existing ground shall be 7'.
5.) Distance from the header barricade rail to the face of the sign panel shall be 2' min and 10' max.
6.) Steel tripods shall not be allowed

(See TxDOT B.C. Sheets (BC-98) for specific construction information)

CONES

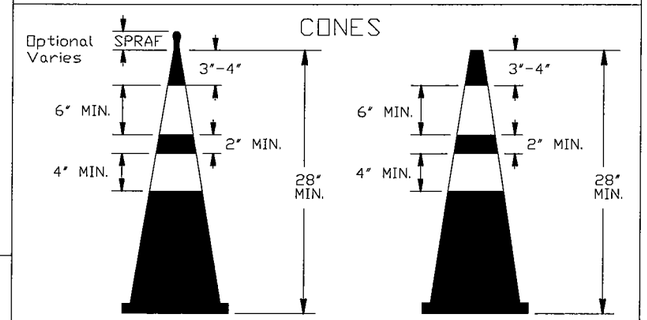

1.) Base for 28" high cones must weigh at least 9.5 lbs.
2.) Night time cones must have reflective collars.

(See TxDOT B.C. Sheets (BC-98) for specific construction information)

Lockwood, Andrews & Newnam, Inc.

STATE OF TEXAS
DAWN ANN GREEN
79721
LICENSED
PROFESSIONAL ENGINEER

City of Kerrville
Main Street
Extension
Project

BARRICADE AND CONSTRUCTION DETAILS

No.	Date	Revisions	App.

Scale:
Date:
Designed by: T.C.
Drawn by: M.K.
Checked by: P.J.
Approved by: D.G.
Project No. 2178-20-001

C83

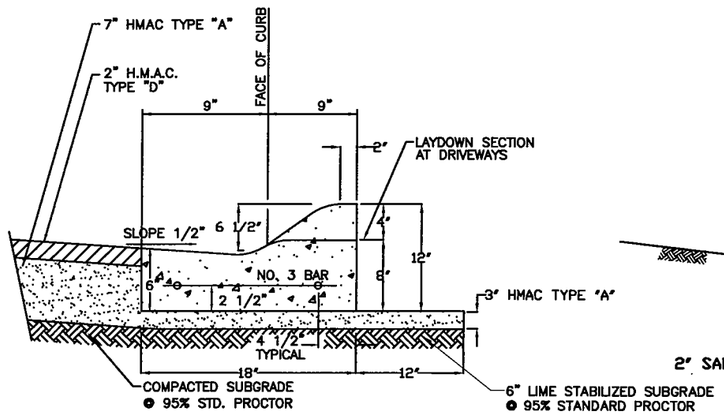

TYPICAL CURB AND GUTTER DETAIL

N.T.S.

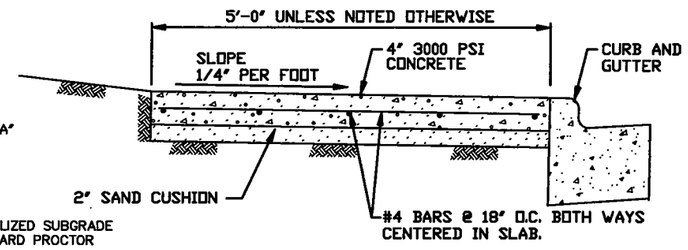

TYPICAL SIDEWALK SECTION

N.T.S.

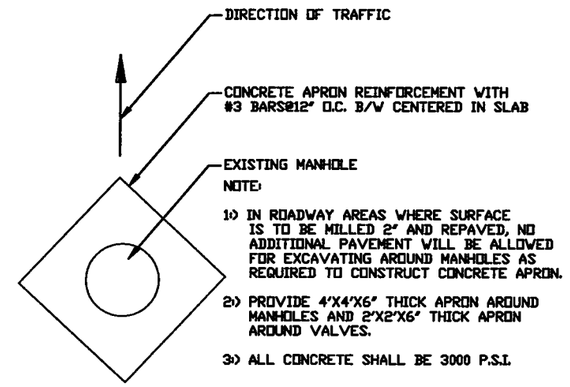

NOTE:

1) IN ROADWAY AREAS WHERE SURFACE IS TO BE MILLED 2" AND REPAVED, NO ADDITIONAL PAVEMENT WILL BE ALLOWED FOR EXCAVATING AROUND MANHOLES AS REQUIRED TO CONSTRUCT CONCRETE APRON.

2) PROVIDE 4'X4'X6" THICK APRON AROUND MANHOLES AND 2'X2'X6" THICK APRON AROUND VALVES.

3) ALL CONCRETE SHALL BE 3000 P.S.I.

PLAN

CONCRETE APRON AT VALVES AND MANHOLES

N.T.S.

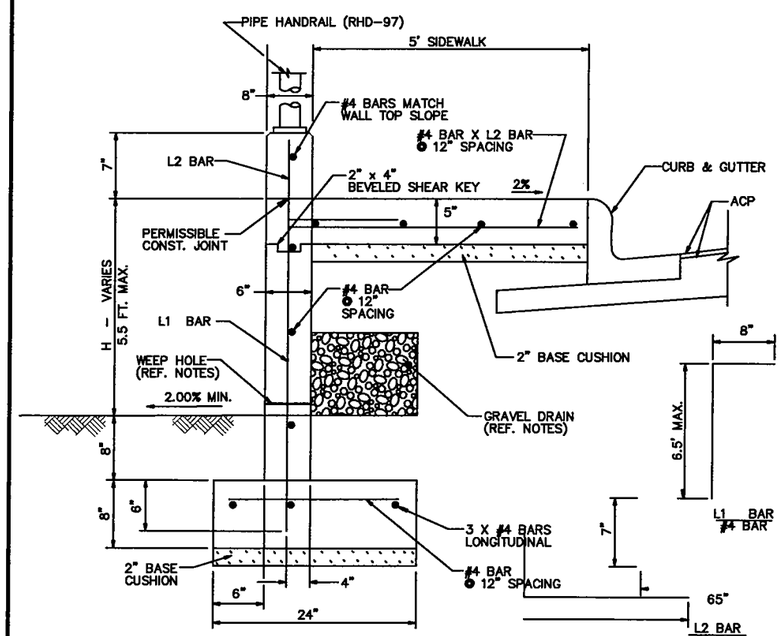

TYPE "E" CURB RETAINING WALL

N.T.S.

TYPE "E1" CURB - "H" = 0' TO 1'-0"
TYPE "E2" CURB - "H" = 1'-0" TO 3'-0"
TYPE "E3" CURB - "H" = 3'-0" TO 5'-6"

CONCRETE CURB (SPL) TYPE 'E' CURB NOTES

1. TYPE "E" CURBS SHALL BE CONSTRUCTED WITH 3/4 " CHAMFERED CORNERS AT ALL EXPOSED CORNERS
2. TYPE "E" CURBS, AS NOTED BELOW, SHALL BE CONSTRUCTED WITH 2" DIAM. WEEPHOLES AT 10' SPACING MAXIMUM OR AS DIRECTED BY THE ENGINEER. WEEPHOLES WILL HAVE NO LESS THAN 4.0% SLOPE TO DRAIN.
3. TYPE "E" CURBS, AS NOTED BELOW, SHALL BE CONSTRUCTED WITH GRAVEL DRAIN. GRAVEL DRAIN SHALL MEASURE 8" x 8" AND CONTINUOUS ALONG THE FULL LENGTH OF THE WALL OR AS DIRECTED BY THE ENGINEER.
4. GRAVEL DRAIN ON TYPE "E" CURBS SHALL CONSIST OF FREE DRAINING CRUSHED STONE ENCLOSED IN GALVANIZED HARDWARE CLOTH. HARDWARE CLOTH MESH SHALL NOT EXCEED 1/4 " SIZE.
5. WHERE A WEEPHOLE IS INSTALLED WITHOUT GRAVEL DRAIN, 8" x 8" SECTION OF FILTER FABRIC CLOTH SHALL BE SECURELY ATTACHED OR ADHERED TO BACK SURFACE OF TYPE "E" CURB CENTERED OVER WEEPHOLE, PRIOR TO BACK-FILLING CURB.
6. TYPE "E" CURB FOOTING IS NOT REQUIRED WHERE CURB HEIGHT "H" <= 12". IN SUCH CASE, VERTICAL REINFORCEMENT SHALL BE TERMINATED 2" FROM BASE OF CURB WALL.
7. FINISHED GRADE ADJACENT TO TYPE "E" CURB SHALL BE LAID BACK AT MIN. 2% SLOPE AWAY FROM FACE OF CURB WALL TO MATCH EXISTING GRADES.
8. SIDEWALK ATTACHED TO TYPE "E" CURB AS SHOWN ON DETAILS SHALL BE MEASURED UNDER CONCRETE SIDEWALKS.
9. WEEPHOLES, HARDWARE CLOTH, GRAVEL DRAIN, FOOTING, REINFORCEMENT, SAND CUSHION, BACKFILL AND OTHER MISC. ITEMS REQUIRED FOR THE CONSTRUCTION OF CURB SHALL NOT BE MEASURED SEPARATELY FOR PAYMENT BUT CONSIDERED SUBSIDIARY TO THE SIDEWALK AND TYPE "E" CURB.
10. ALL REINF. STEEL FOR "E" CURBS SHALL BE GRADE 60.
11. ALL CONCRETE FOR "E" CURBS SHALL BE TxDOT CLASS C, 3600 PSI.
12. EXPANSION JOINTS FOR TYPE "E" CURBS SHALL BE PLACED EVERY 32 FT. AND SHALL COINCIDE WITH SIDEWALK EXPANSION JOINTS UNLESS OTHERWISE NOTED ON PLANS OR AS DIRECTED BY THE ENGINEER.
13. CONSTRUCTION JOINTS FOR TYPE "E" CURBS SHALL BE PLACED EVERY 60 FT. UNLESS OTHERWISE NOTED ON PLANS OR AS DIRECTED BY THE ENGINEER.

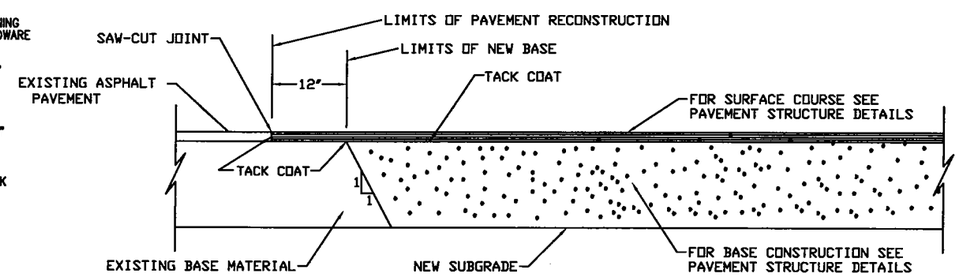

PAVEMENT JUNCTION DETAILS

N. T. S.

Lockwood, Andrews & Newnam, Inc.

STATE OF TEXAS — DAWN ANN GREEN — 79721 — LICENSED PROFESSIONAL ENGINEER

City of Kerrville
Main Street Extension Project

MAIN STREET
MISCELLANEOUS DETAILS

No.	Date	Revisions	App.

Scale: -
Date: Aug. 2004
Designed by: T.C.
Drawn by: M.K.
Checked by: P.J.
Approved by: D.G.
Project No. 2178-20-001

C84